US00D790681S

(12) United States Design Patent

Poulton et al.

(10) Patent No.: US D790,681 S
(45) Date of Patent: ** Jun. 27, 2017

(54) **FAN**

(71) Applicant: **Dyson Technology Limited**, Wiltshire (GB)

(72) Inventors: **Roy Edward Poulton**, Swindon (GB); **Ben Thomas Edmonds**, Swindon (GB); **George Oram**, Gloucester (GB); **Thomas Douglas Ridley**, Bristol (GB); **Leanne Joyce Garner**, Bristol (GB); **Adam James Bates**, Oxford (GB); **Peter David Gammack**, Gloucester (GB); **Michael Graham Love**, Bristol (GB)

(73) Assignee: **Dyson Technology Limited**, Malmesbury, Wiltshire (GB)

(**) Term: **15 Years**

(21) Appl. No.: **29/567,897**

(22) Filed: **Jun. 13, 2016**

(51) **LOC (10) Cl.** **23-04**

(52) **U.S. Cl.**
USPC **D23/370**

(58) **Field of Classification Search**
USPC D23/370, 355, 385, 386, 342, 336, 337, D23/376, 378
CPC F04D 29/703; F04D 29/403; F04D 3/00; F04D 17/00
See application file for complete search history.

(56) **References Cited**

U.S. PATENT DOCUMENTS

D598,532	S	*	8/2009	Dyson	D23/370
D605,748	S	*	12/2009	Gammack	D23/370
D638,114	S		5/2011	Li et al.	
D672,023	S	*	12/2012	Wallace	D23/332
D705,415	S		5/2014	Lo	
D728,769	S		5/2015	Dyson et al.	
D728,770	S		5/2015	Dyson et al.	
D729,372	S		5/2015	McPherson et al.	
D746,425	S	*	12/2015	Dyson	D23/356
D746,966	S		1/2016	Dyson et al.	
D747,450	S		1/2016	Dyson et al.	
D749,231	S		2/2016	Dyson et al.	
D768,280	S		10/2016	Peet et al.	
D768,281	S		10/2016	Peet et al.	
D768,839	S		10/2016	Peet et al.	
D768,840	S		10/2016	Peet et al.	
D768,841	S		10/2016	Peet et al.	
D768,842	S	*	10/2016	Peet	D23/370
2012/0318393	A1		12/2012	Tsen	
2014/0210114	A1	*	7/2014	Staniforth	F04D 25/08 261/30
2016/0238026	A1		8/2016	Barclay	
2016/0238037	A1		8/2016	Peet et al.	
2016/0238038	A1		8/2016	Hughes et al.	
2016/0238039	A1	*	8/2016	Stewart	F04D 29/403

* cited by examiner

Primary Examiner — Susan Bennett Hattan
Assistant Examiner — Janice Hallmark
(74) *Attorney, Agent, or Firm* — Morrison & Foerster LLP

(57) **CLAIM**

We claim the ornamental design for a fan, as shown and described.

DESCRIPTION

FIG. **1** is a perspective view of a fan showing our new design;
FIG. **2** is a front view thereof;
FIG. **3** is a rear view thereof;
FIG. **4** is a side view thereof;
FIG. **5** is a side view of the opposite side of FIG. **4**;
FIG. **6** is a top view thereof; and,
FIG. **7** is a bottom view thereof.
The broken lines in the drawings depict parts of the fan that form no part of the claimed design.

1 Claim, 6 Drawing Sheets

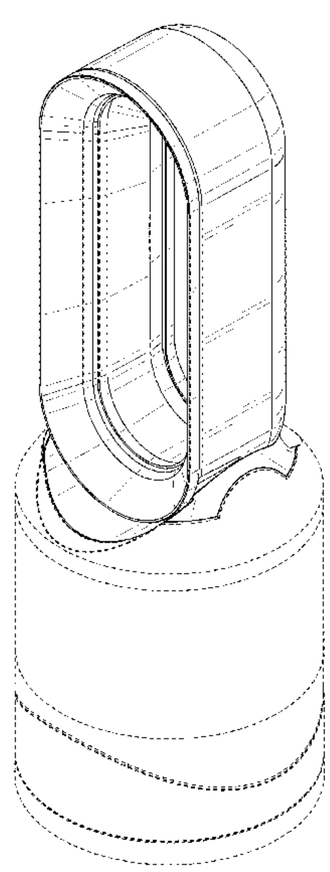

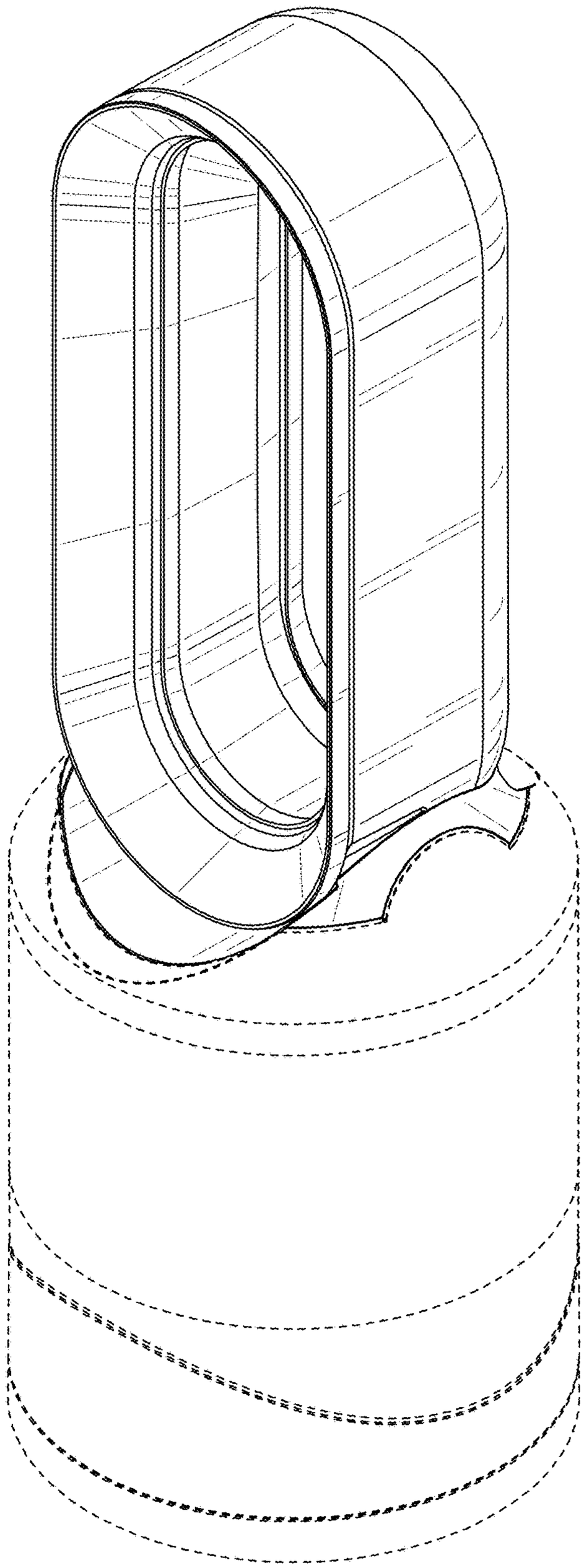

FIG. 1

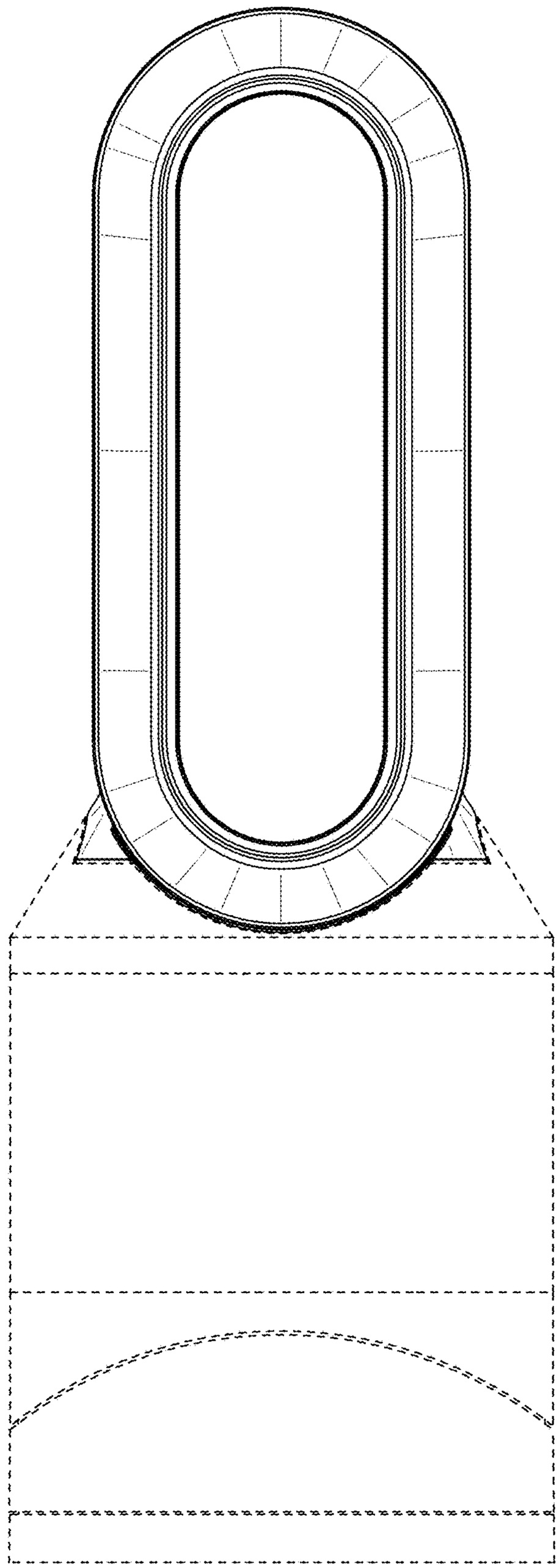

FIG. 2

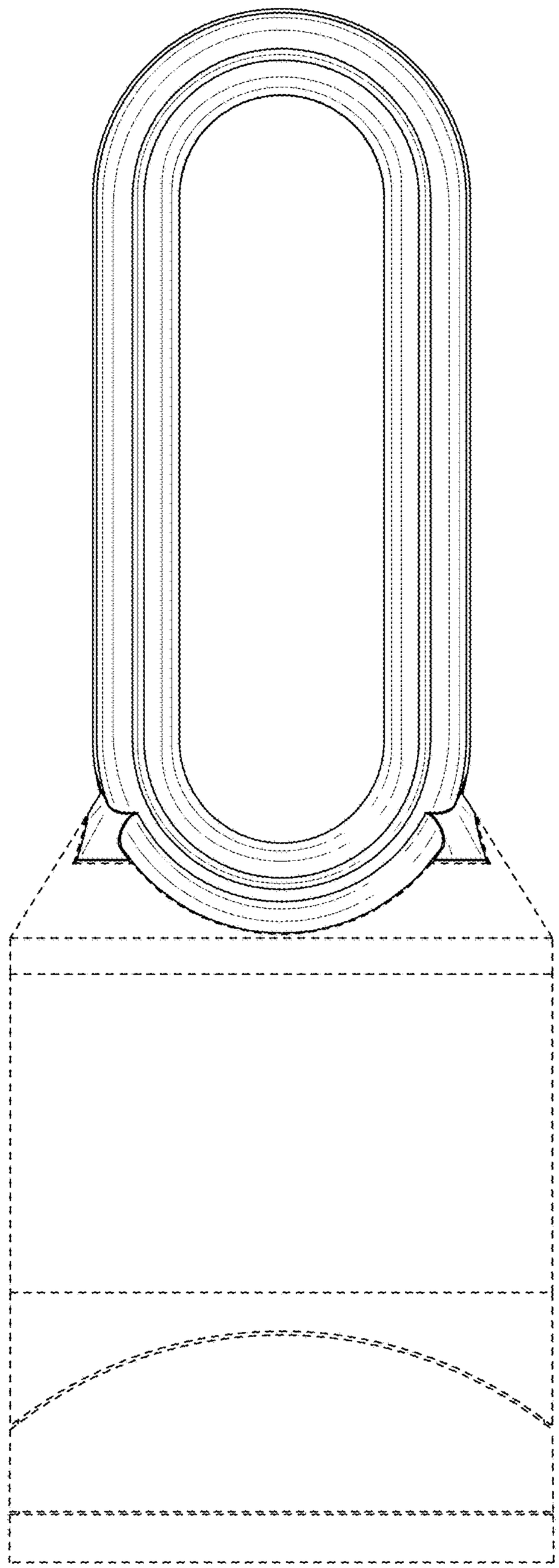

FIG. 3

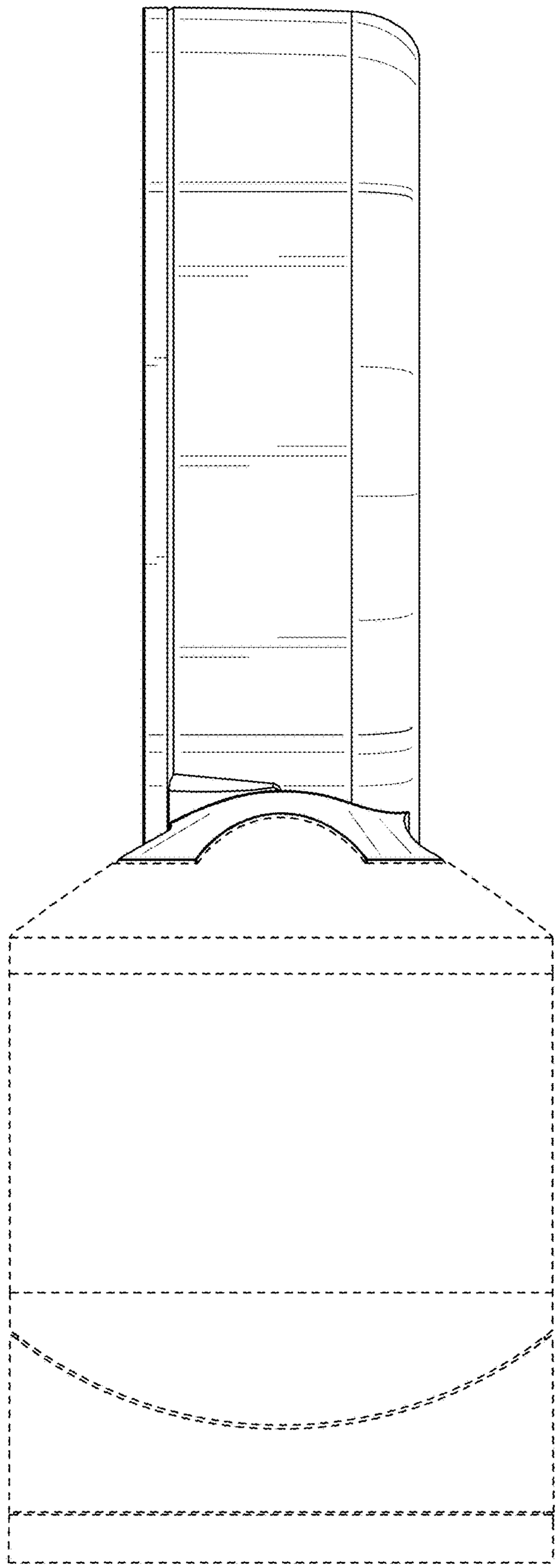

FIG. 4

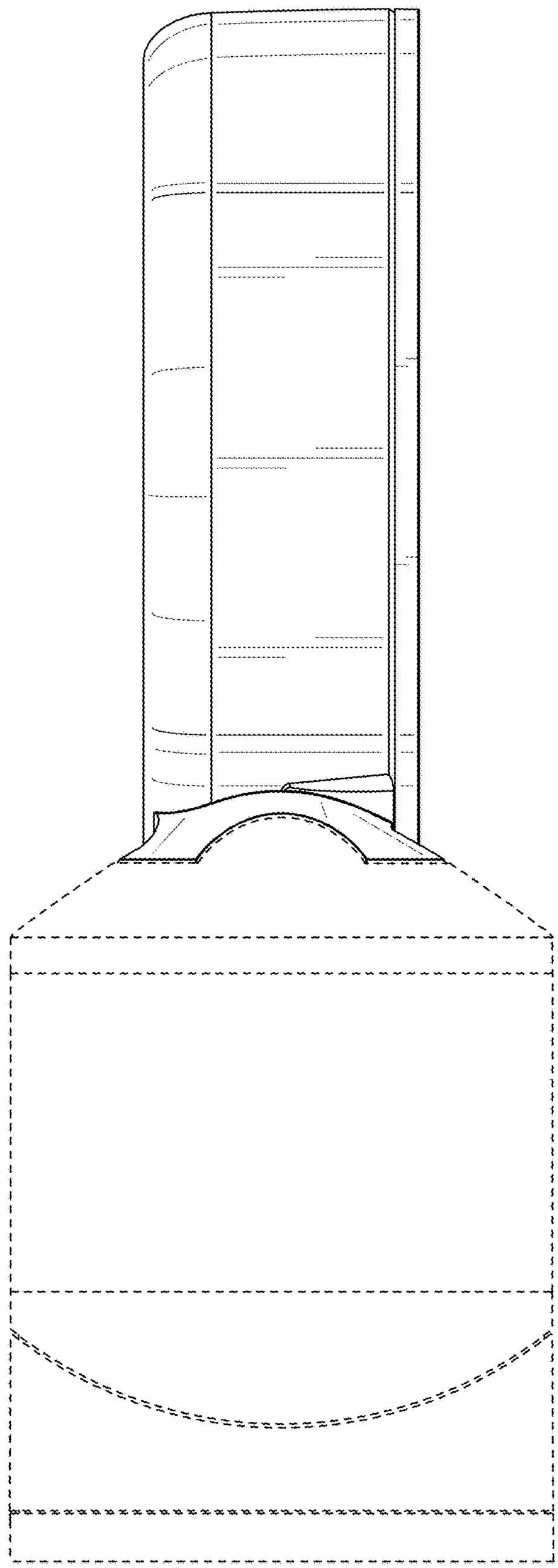

FIG. 5

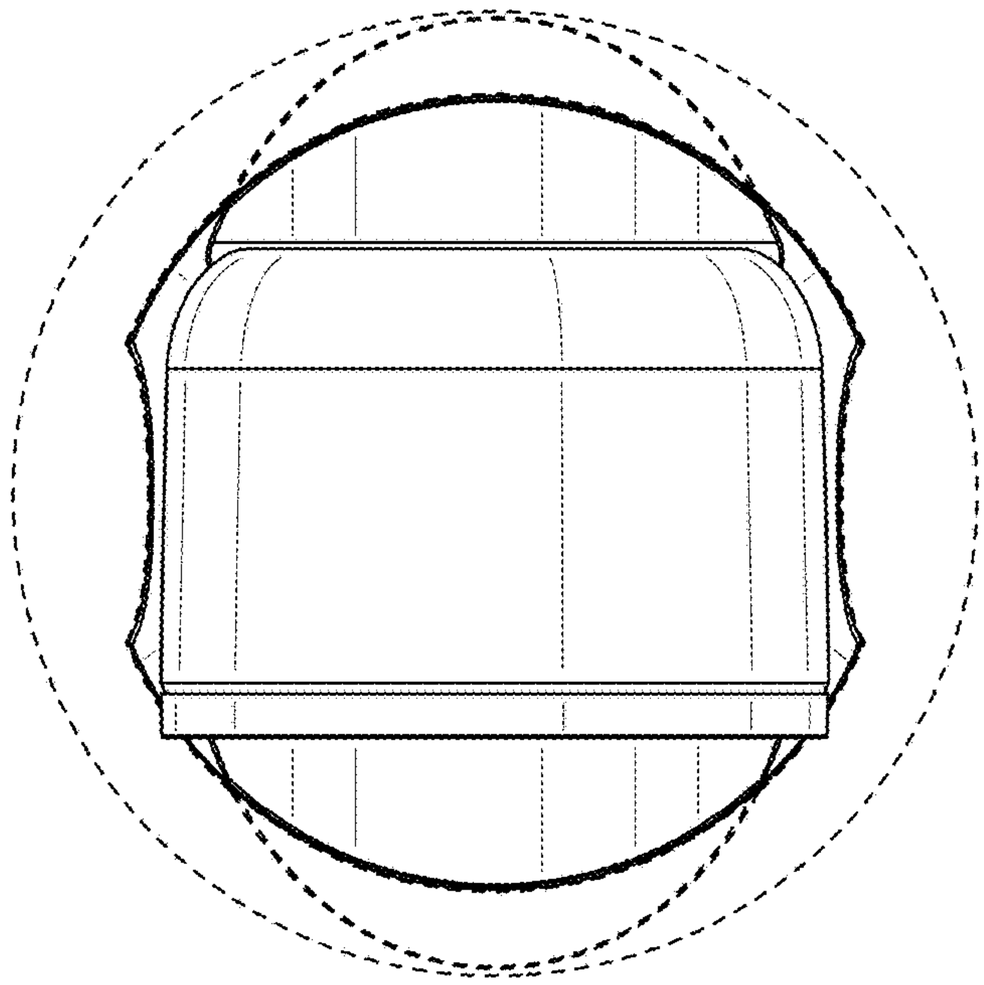

FIG. 6

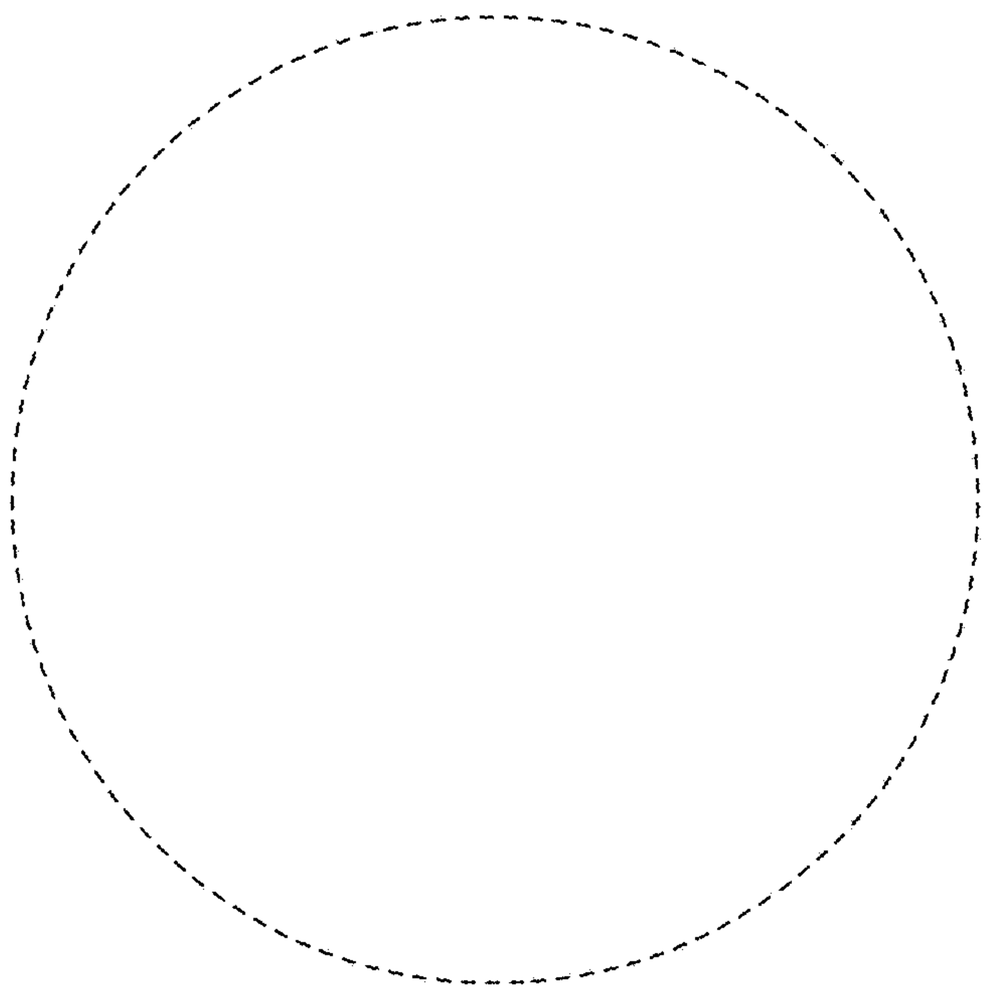

FIG. 7