US00D790434S

(12) United States Design Patent

Adler

(10) Patent No.: US D790,434 S
(45) Date of Patent: ** Jun. 27, 2017

(54) **VEHICLE BICYCLE CARRIER**

(71) Applicant: **THULE SWEDEN AB**, Hillerstorp (SE)

(72) Inventor: **Jan Adler**, Skillingaryd (SE)

(73) Assignee: **Thule Sweden AB**, Hillerstorp (SE)

(**) Term: **15 Years**

(21) Appl. No.: **35/500,500**

(22) Filed: **Dec. 21, 2015**

(80) **Hague Agreement Data**

Int. Filing Date: **Dec. 21, 2015**
Int. Reg. No.: **DM/088880**
Int. Reg. Date: **Dec. 21, 2015**
Int. Reg. Pub. Date: **Jan. 15, 2016**

(30) **Foreign Application Priority Data**

Jul. 14, 2015 (EM) 002736678

(51) **LOC (10) Cl.** **12-16**
(52) **U.S. Cl.**
USPC **D12/408**
(58) **Field of Classification Search**
USPC D12/111, 406, 407, 408, 412, 414; 224/42.11, 314, 331, 329, 400, 412, 419, 224/442.12, 451, 461, 488, 489, 495, 497, 224/499, 500, 502, 504, 511–537, 924; 280/202, 304.05; 296/37.1
CPC B60R 9/06; B60R 9/10; B60R 11/00
See application file for complete search history.

(56) **References Cited**

U.S. PATENT DOCUMENTS

D329,035 S * 9/1992 Blackburn D12/408
5,690,260 A * 11/1997 Aikins B60R 9/10 224/504
D628,141 S * 11/2010 Weaver D12/408
D637,137 S * 5/2011 Weaver D12/408
D656,080 S * 3/2012 Budd D12/408
D658,567 S * 5/2012 Shen D12/408
D671,883 S * 12/2012 Farber D12/408
D684,917 S * 6/2013 Williams D12/408
D706,209 S * 6/2014 Flaherty D12/407
D707,617 S * 6/2014 Flaherty D12/407
D717,717 S * 11/2014 Williams D12/408
D722,289 S * 2/2015 Williams D12/408
D727,831 S * 4/2015 Eriksson D12/407
D743,871 S * 11/2015 Freet D12/408
9,174,584 B1 * 11/2015 Cha B60R 9/10
2012/0234883 A1 * 9/2012 Sautter B60R 9/10 224/502
2013/0062385 A1 * 3/2013 Pedrini B60R 9/06 224/501
2013/0105534 A1 * 5/2013 Farber B60R 9/10 224/314
2014/0125045 A1 * 5/2014 Nusbaum B60R 9/10 280/769
2016/0096482 A1 * 4/2016 Cha B60R 9/10 224/496

(Continued)

Primary Examiner — Darlington Ly
(74) *Attorney, Agent, or Firm* — Sterne, Kessler, Goldstein & Fox P.L.L.C.

(57) **CLAIM**

The ornamental design for a vehicle bicycle carrier, as shown and described.

DESCRIPTION

1.1 is a rear elevation view of a vehicle bicycle carrier showing my new design.
1.2 is a left side elevation view thereof
1.3 is a right side elevation view thereof;
1.4 is a front perspective view thereof;
1.5 is front elevation view thereof; and
1.6 is a top plan view thereof.
The broken lines in the figures show portions of the vehicle bicycle carrier that form no part of the claimed design.

1 Claim, 6 Drawing Sheets

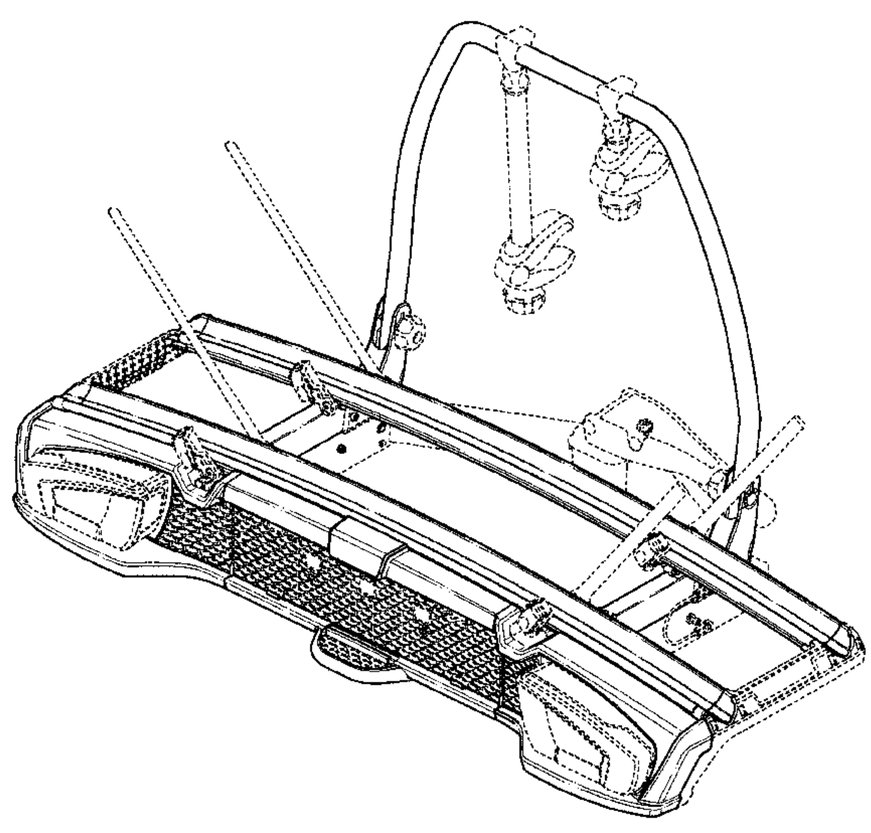

(56) **References Cited**

U.S. PATENT DOCUMENTS

2016/0096483 A1* 4/2016 Cha B60R 9/10
224/496

* cited by examiner

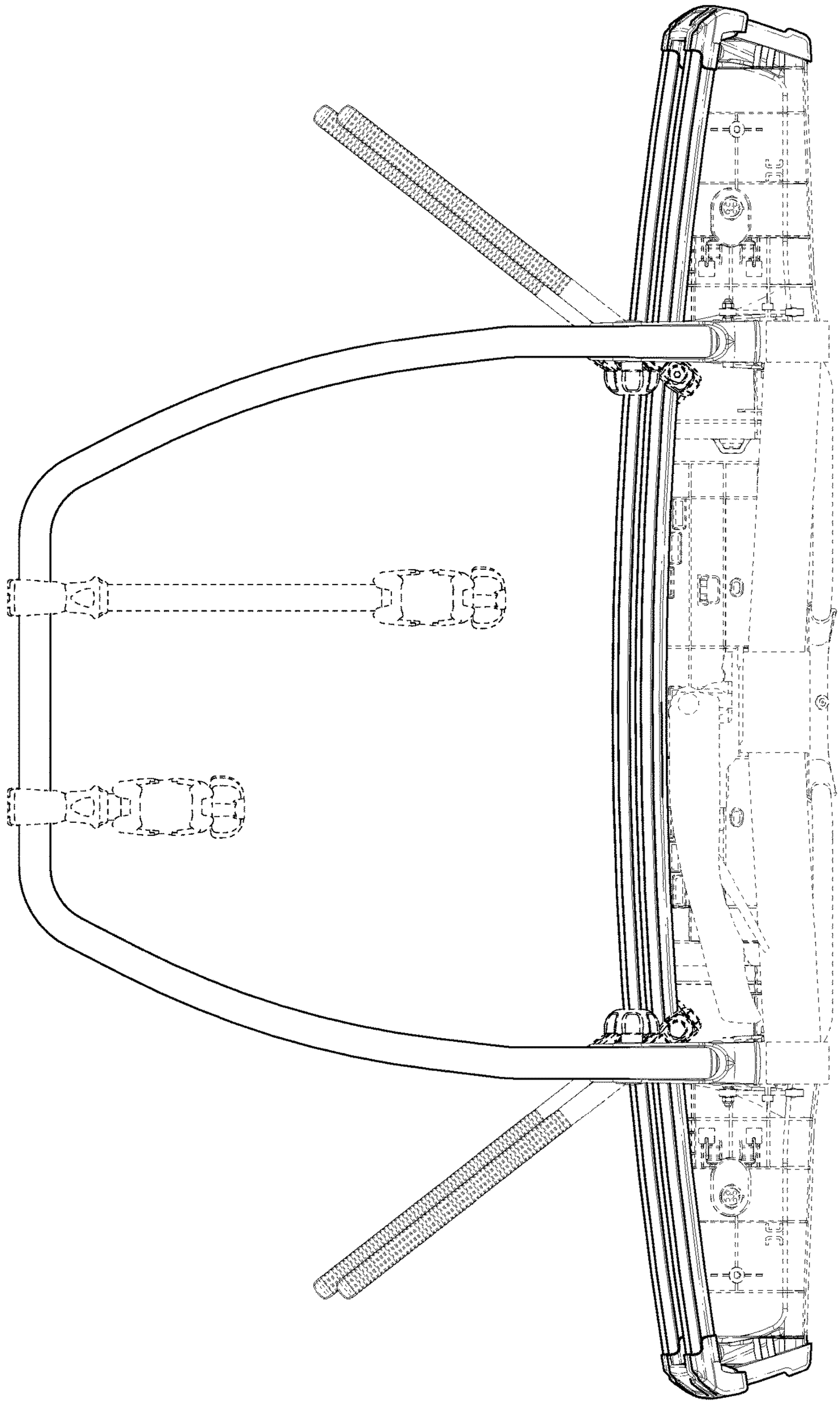

1.1

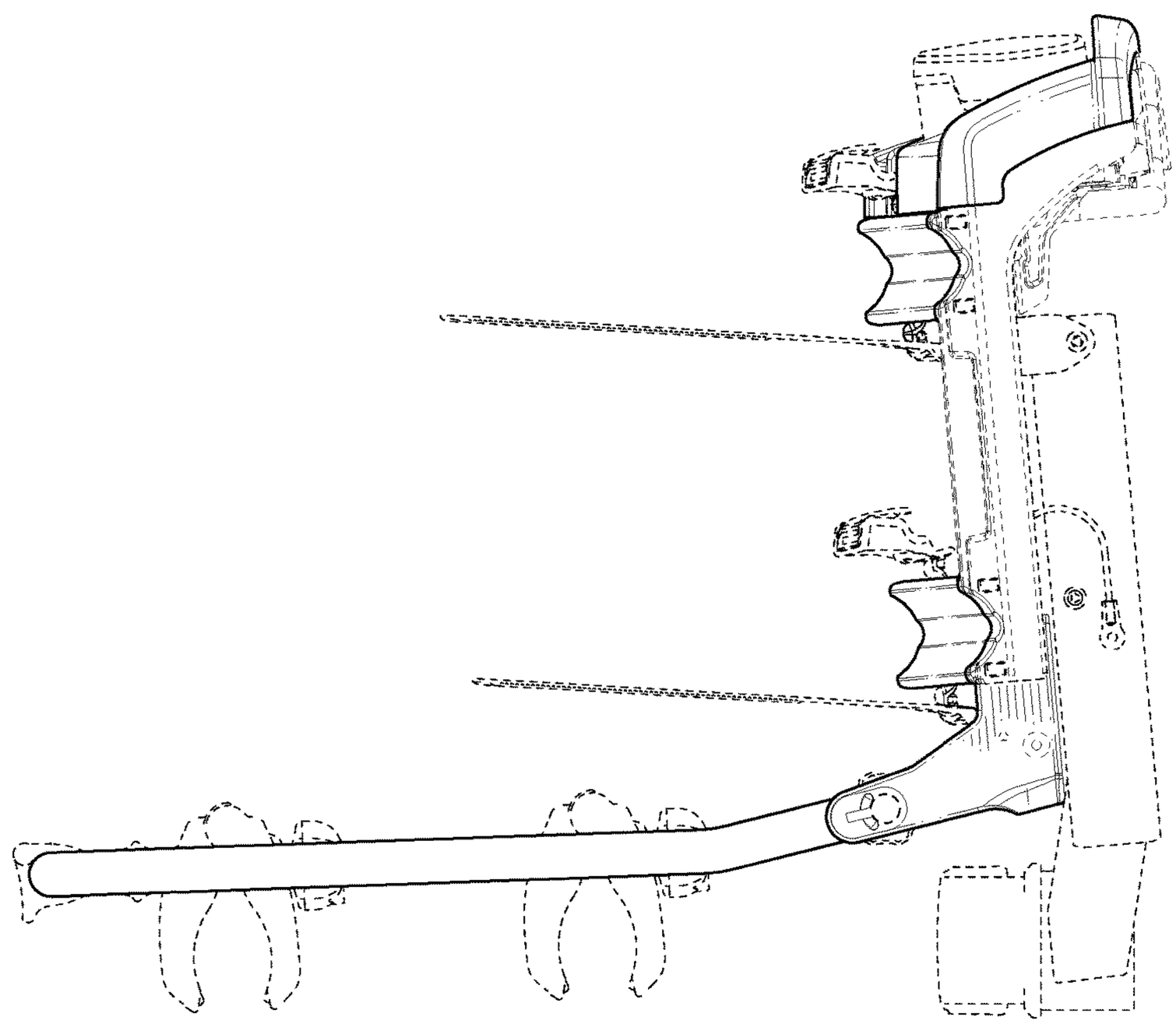

1.2

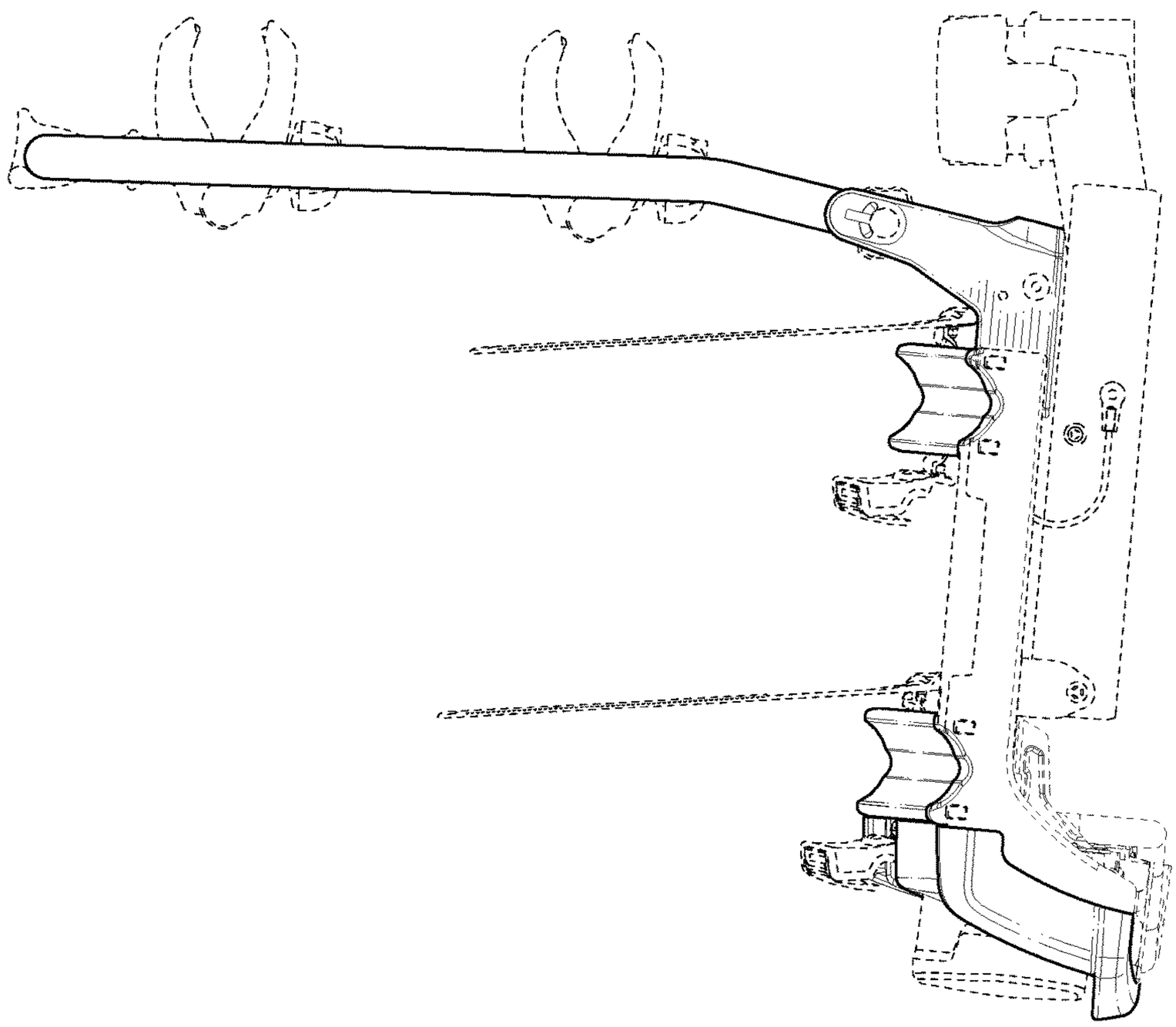

1.3

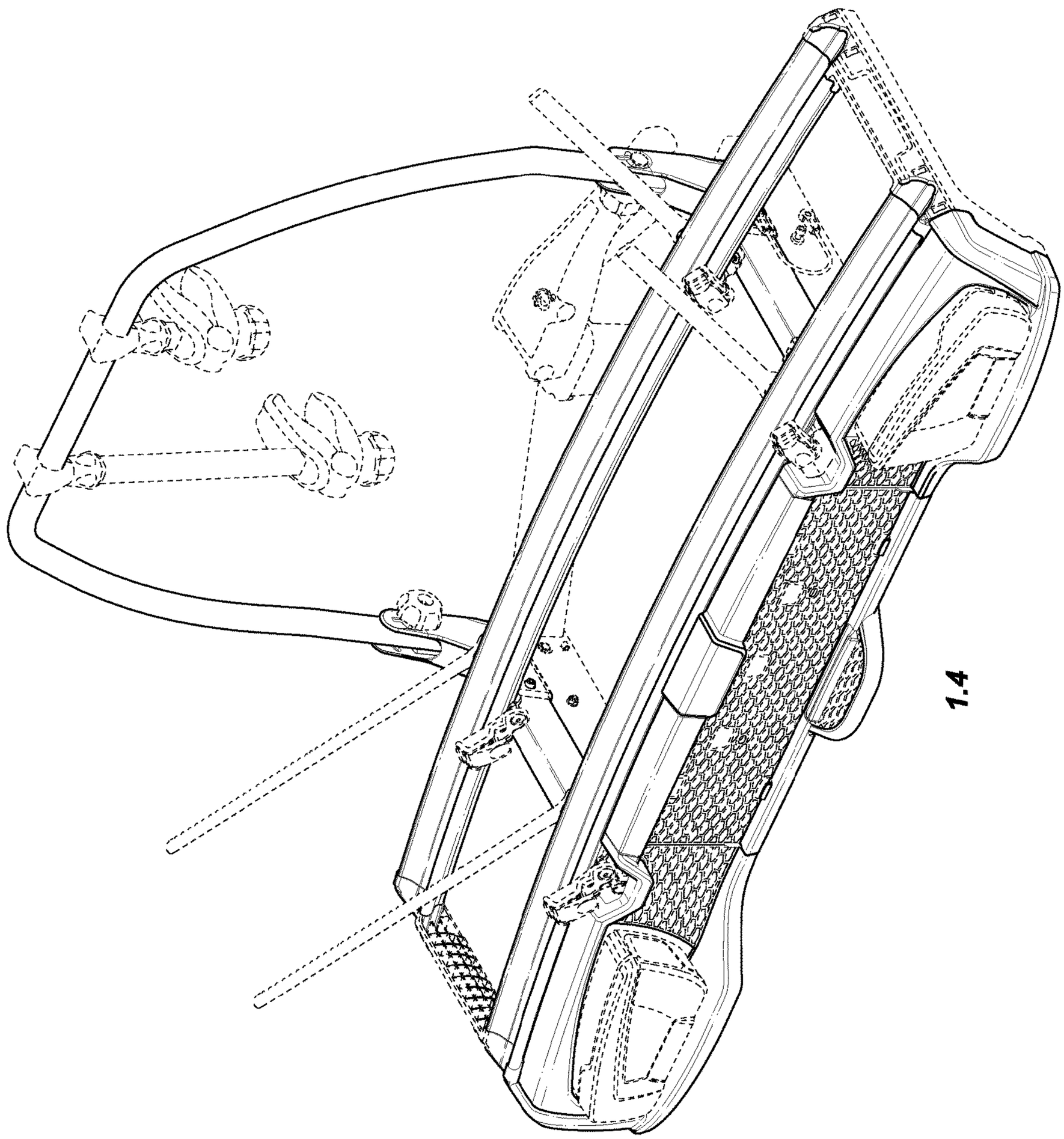

1.4

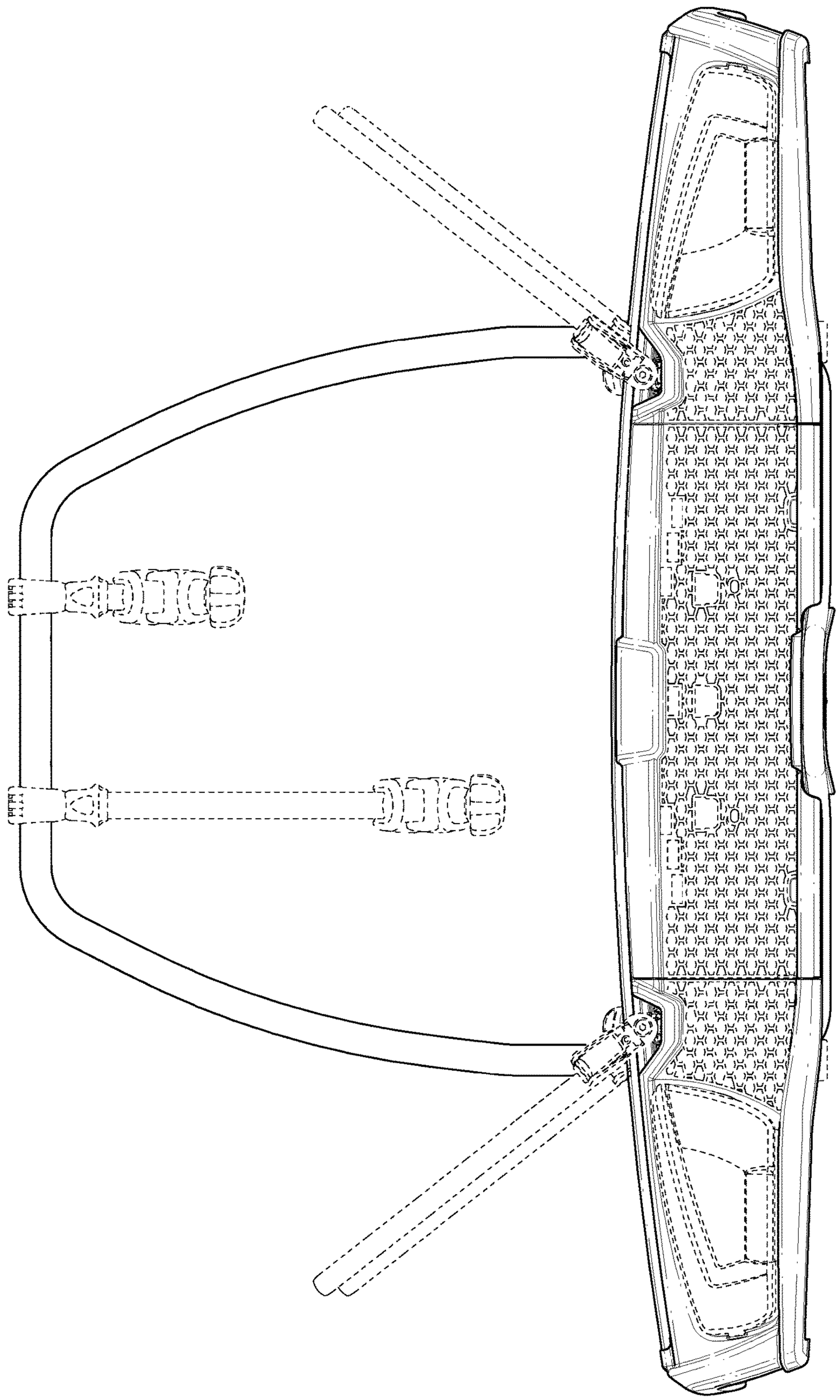

1.5

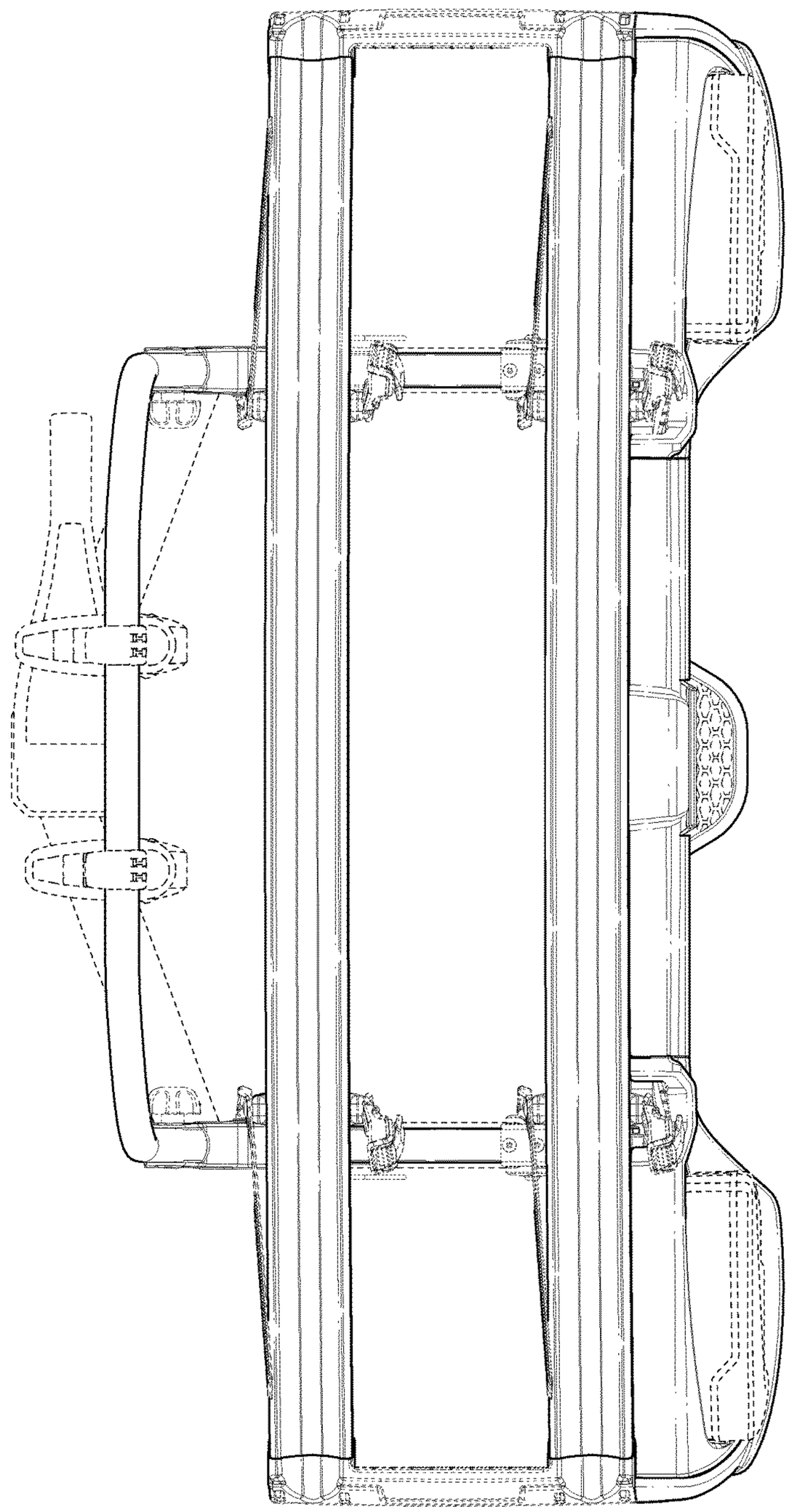

1.6