US00D789768S

(12) United States Design Patent

Hsu

(10) Patent No.: US D789,768 S
(45) Date of Patent: ** Jun. 20, 2017

(54) **ELECTRONIC DOOR LOCK**

(71) Applicant: **Spectrum Brands, Inc.**, Middleton, WI (US)

(72) Inventor: **Wei Hsu**, Lake Forest, CA (US)

(73) Assignee: **Spectrum Brands, Inc.**, Middleton, WI (US)

(**) Term: **15 Years**

(21) Appl. No.: **29/560,223**

(22) Filed: **Apr. 4, 2016**

(51) **LOC (10) Cl.** **08-07**

(52) **U.S. Cl.**
USPC **D8/330**; D8/334; D8/331

(58) **Field of Classification Search**
USPC D8/330, 331, 336, 338, 339, 340, 343; 70/14, 2, 51, 57, 57.1, 91, 107, 141; 292/2, 32, 137, 288, 289, 290, 292
CPC G05B 19/00; G05B 15/00; E05B 49/00; E05B 9/00; E05B 17/00; E05B 37/00
See application file for complete search history.

(56) **References Cited**

U.S. PATENT DOCUMENTS

D285,668	S	9/1986	Tanaka et al.	
D401,565	S	11/1998	Smith et al.	
6,016,955	A *	1/2000	De Rooij	G06Q 20/04 235/379
D436,933	S	1/2001	Armstrong	
D495,578	S *	9/2004	Sampson	D8/330
D512,898	S *	12/2005	Metivier	D10/106.1
7,336,150	B2 *	2/2008	Gokcebay	E05B 47/06 340/5.2
D669,757	S *	10/2012	Dent	D8/330
8,490,443	B2 *	7/2013	Gokcebay	G07C 9/00666 70/214
8,490,445	B2 *	7/2013	Chiou	E05B 47/0012 70/224
D687,786	S	8/2013	Chin et al.	
D687,787	S	8/2013	Chin et al.	
D688,213	S	8/2013	Huang et al.	
D688,215	S	8/2013	Yu et al.	
D688,635	S	8/2013	Ni et al.	
D733,519	S *	7/2015	Gokcebay	D8/330
D733,522	S	7/2015	Kim et al.	
D734,125	S *	7/2015	Kodama	D8/330
D734,650	S *	7/2015	Kodama	D8/330
D735,016	S	7/2015	Kim et al.	
D743,349	S	11/2015	Leeland et al.	
D746,165	S	12/2015	Li	
9,280,276	B2 *	3/2016	Hsieh	G06F 3/0488
9,382,729	B2 *	7/2016	Ellis	E05B 65/104
D772,691	S *	11/2016	Han	D8/330

* cited by examiner

Primary Examiner — Prabhakar Deshmukh
(74) *Attorney, Agent, or Firm* — Banner & Witcoff, Ltd.

(57) **CLAIM**

The ornamental design for an electronic door lock, as shown and described.

DESCRIPTION

FIG. **1** is a front perspective view of an electronic door lock showing my new design;
FIG. **2** is a front view thereof;
FIG. **3** is a left side view thereof;
FIG. **4** is a right side view thereof;
FIG. **5** is a top view thereof; and,
FIG. **6** is a bottom view thereof.
The broken line showing of the rear edge of the electronic door lock represents an unclaimed boundary of the design.

1 Claim, 4 Drawing Sheets

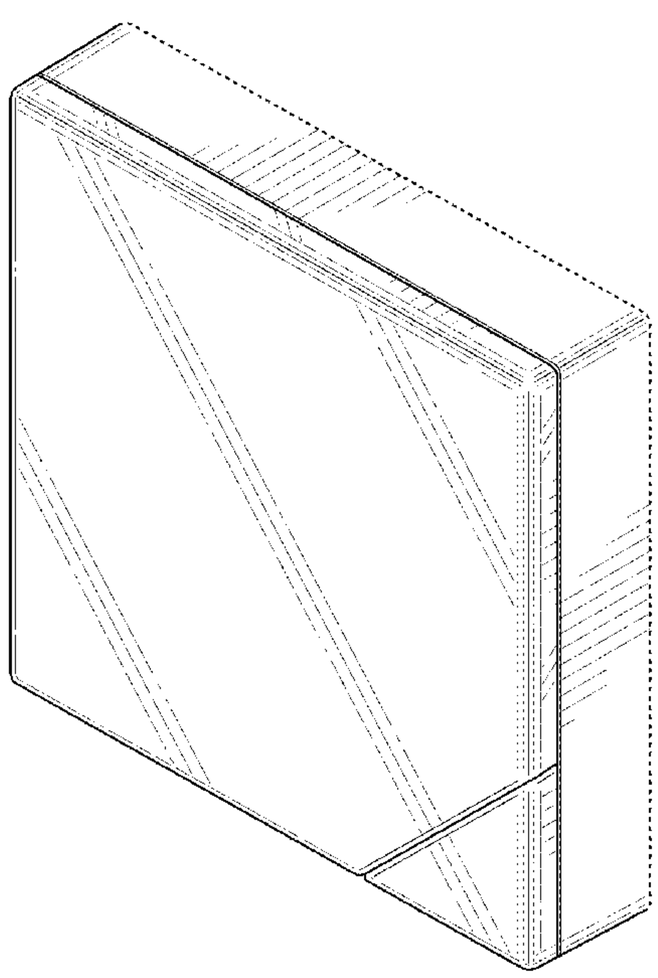

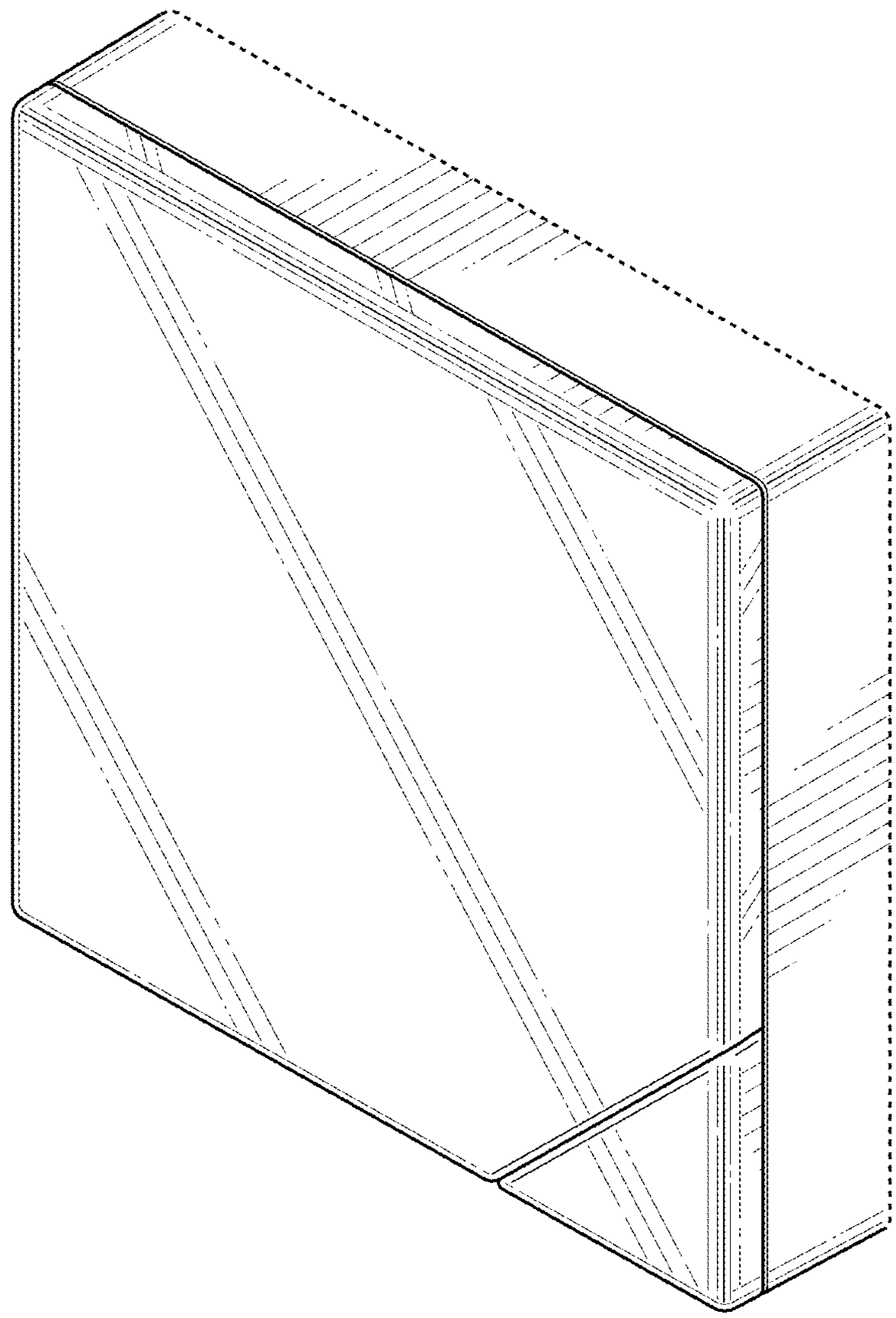

FIG. 1

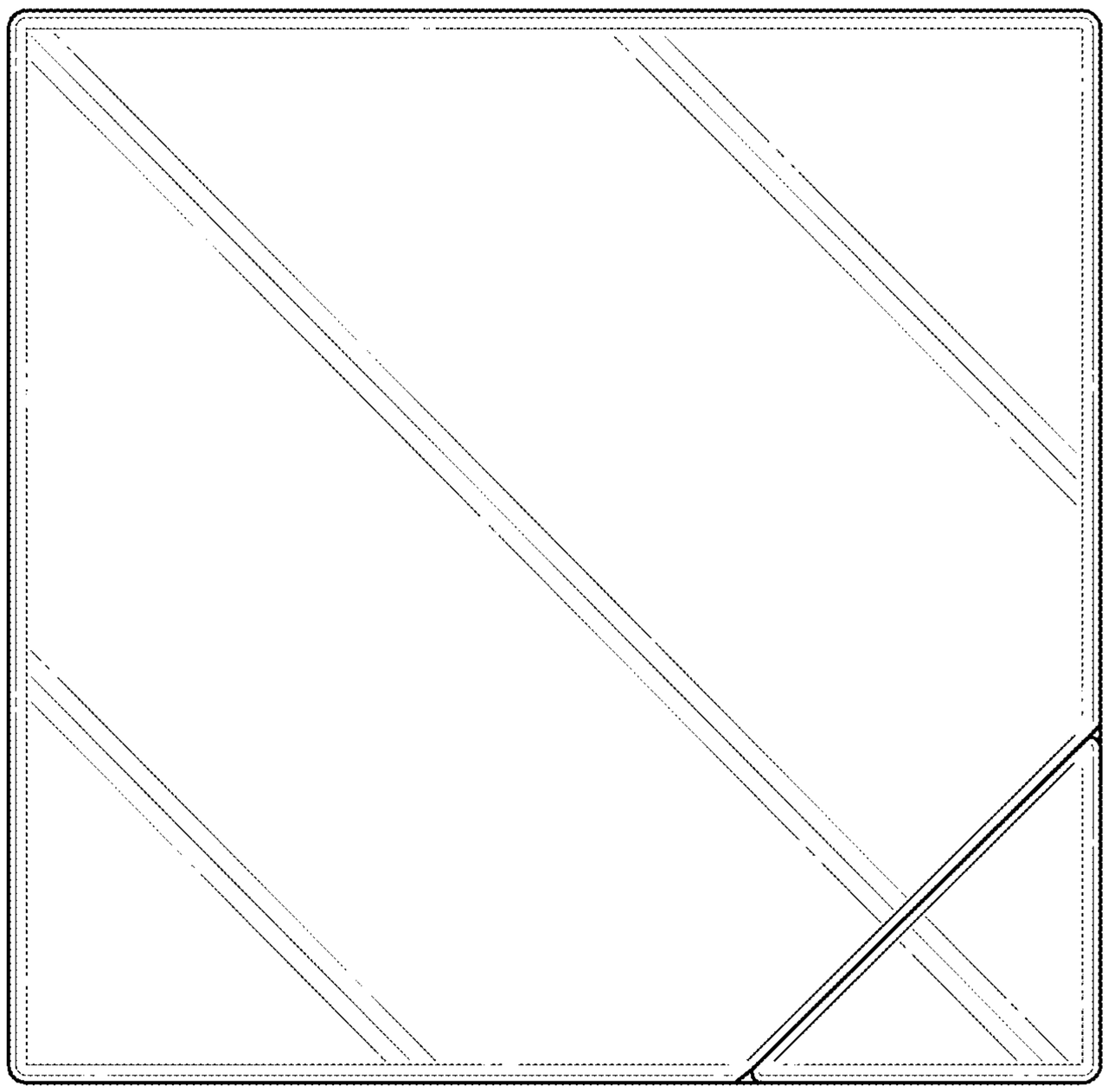

FIG. 2

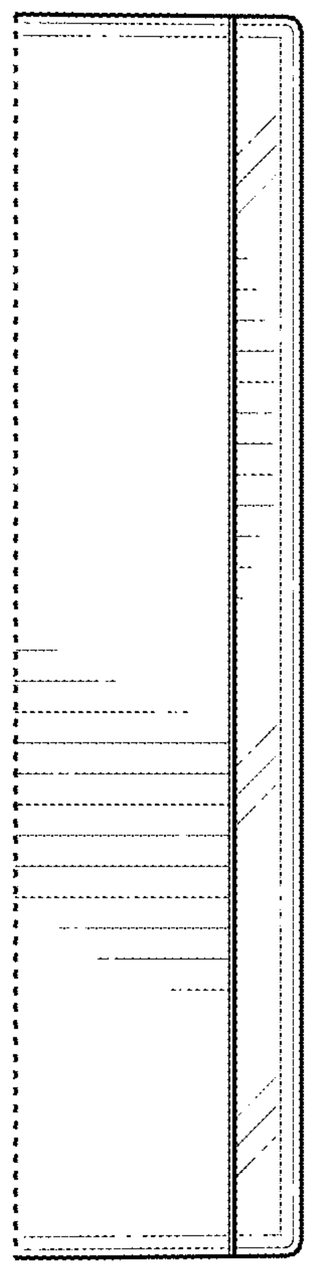

FIG. 3

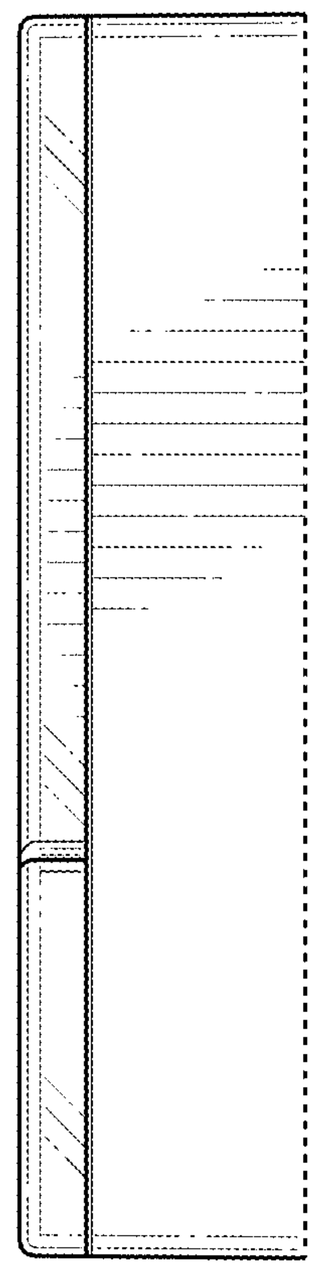

FIG. 4

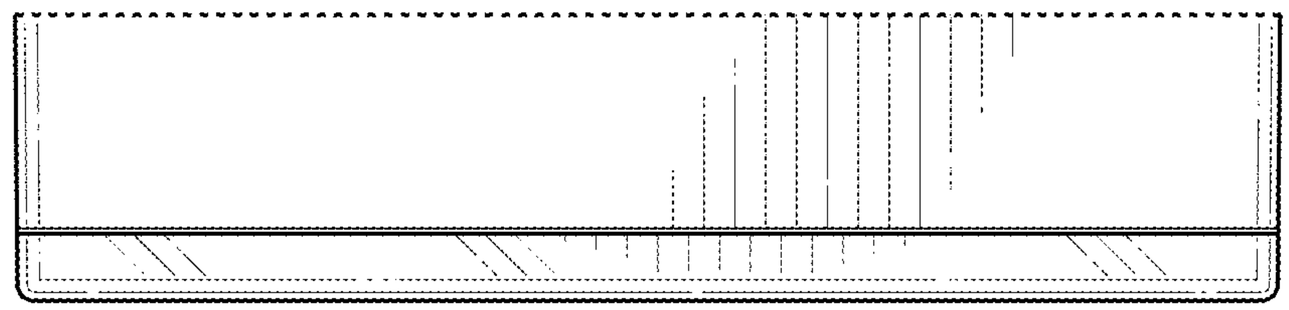

FIG. 5

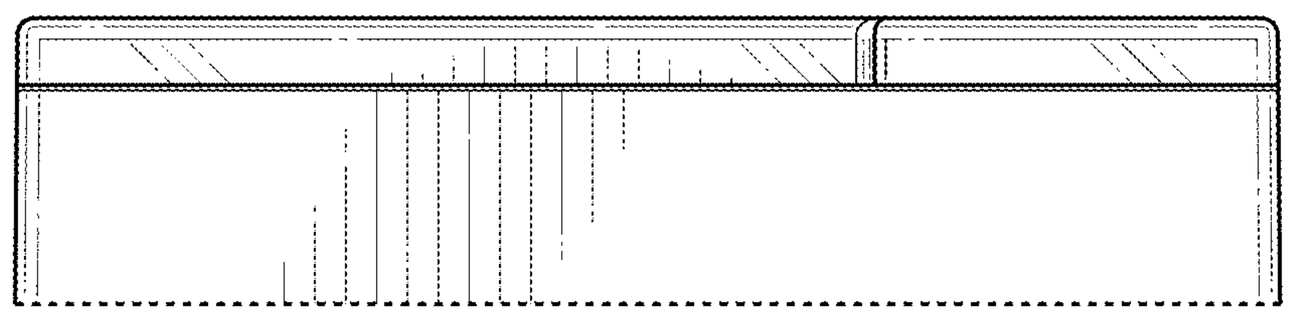

FIG. 6