US00D789466S

(12) United States Design Patent

Cho et al.

(10) Patent No.: US D789,466 S
(45) Date of Patent: ** Jun. 13, 2017

(54) **BALL RETURN**

(71) Applicant: **Pure Body Logics**, Anaheim, CA (US)

(72) Inventors: **Sung-Jin Cho**, Gwangju-si (KR); **Floyd Tom Smith**, Anaheim, CA (US); **Benjamin Chung**, Anaheim, CA (US)

(**) Term: **15 Years**

(21) Appl. No.: **29/559,006**

(22) Filed: **Mar. 23, 2016**

(51) **LOC (10) Cl.** **21-02**

(52) **U.S. Cl.**
USPC **D21/705**; D21/699

(58) **Field of Classification Search**
USPC D21/301, 302, 303, 304, 305, 698, 699, D21/704, 705, 706, 780, 788, 781, 790, D21/799.1; 273/398–410; 473/164, 166, 473/172, 197, 431, 432, 434, 435
CPC A63B 63/00; A63B 63/004; A63B 63/007; A63B 63/008; A63B 2063/001; A63B 2063/002; A63B 2063/005; A63B 2063/006; A63B 69/00; A63B 69/0002; A63B 69/002; A63B 69/0024; A63B 69/0026; A63B 69/0097; A63B 2069/0004; A63B 2069/0006; A63B 2069/0008; A63B 2069/0011; A63B 71/022
See application file for complete search history.

(56) **References Cited**

U.S. PATENT DOCUMENTS

2,161,463 A * 6/1939 Frost A63B 69/0097 273/395
3,049,353 A * 8/1962 Viator A63B 63/00 473/194
3,420,528 A * 1/1969 Day A63B 69/3623 273/397
3,836,144 A * 9/1974 Mahoney A63B 69/0097 248/130
3,918,711 A * 11/1975 Zak A63B 69/38 473/195
3,989,246 A * 11/1976 Brown A63B 47/025 124/53.5
4,264,070 A * 4/1981 Torres ..... A63B 69/0097 273/127 C
D271,507 S * 11/1983 Phillips D21/705
4,417,728 A * 11/1983 Hay A63B 63/00 273/342
4,703,931 A * 11/1987 Steen A63B 69/0097 273/410
4,836,542 A * 6/1989 Crawley A63B 63/008 273/400
D302,991 S * 8/1989 York D21/705
4,880,239 A * 11/1989 Leneveu A63B 63/00 473/192
4,883,272 A * 11/1989 Lay A63B 69/406 124/6
5,271,616 A * 12/1993 Grimaldi A63B 63/00 273/394
5,558,338 A * 9/1996 Taub A63B 69/0071 473/416
D380,797 S * 7/1997 Schwan D21/699
(Continued)

Primary Examiner — Catherine Tuttle
(74) *Attorney, Agent, or Firm* — Clement Cheng

(57) **CLAIM**

The ornamental design for a ball return, as shown and described.

DESCRIPTION

FIG. **1** is a perspective view.
FIG. **2** is a front view.
FIG. **3** is a rear view.
FIG. **4** is a right side view.
FIG. **5** is a left side view.
FIG. **6** is a top view; and,
FIG. **7** is a bottom view.

1 Claim, 7 Drawing Sheets

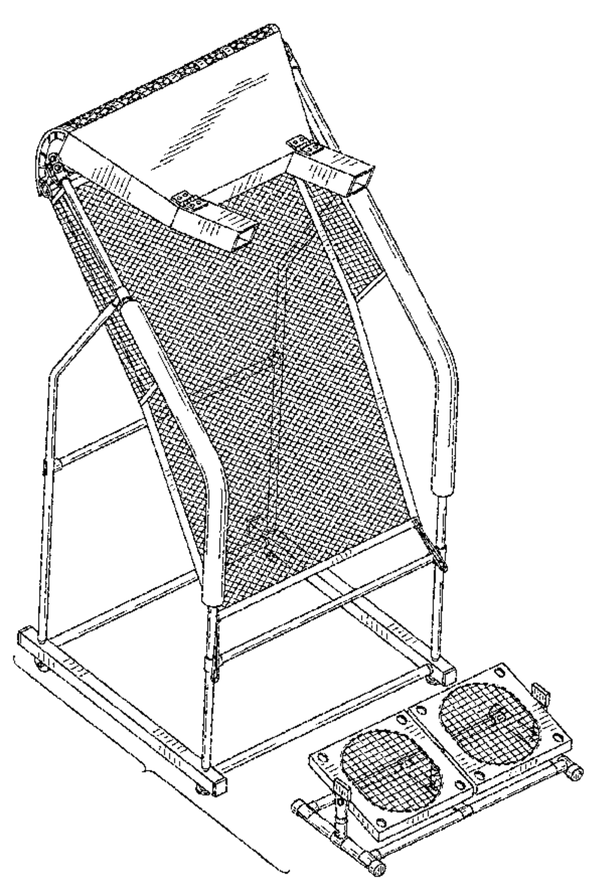

(56) **References Cited**

U.S. PATENT DOCUMENTS

5,938,546	A *	8/1999	Caruso	A63B 69/0097	473/434
7,207,893	B1 *	4/2007	Louie	A63B 63/00	473/166
D598,059	S *	8/2009	Kinkead	D21/699	
D624,976	S *	10/2010	McBride	D21/698	
D628,252	S *	11/2010	Forrest, Sr.	D21/705	
2005/0209027	A1 *	9/2005	Joseph	A63B 69/0071	473/431
2012/0283046	A1 *	11/2012	Yamanashi	A63B 63/00	473/432

* cited by examiner

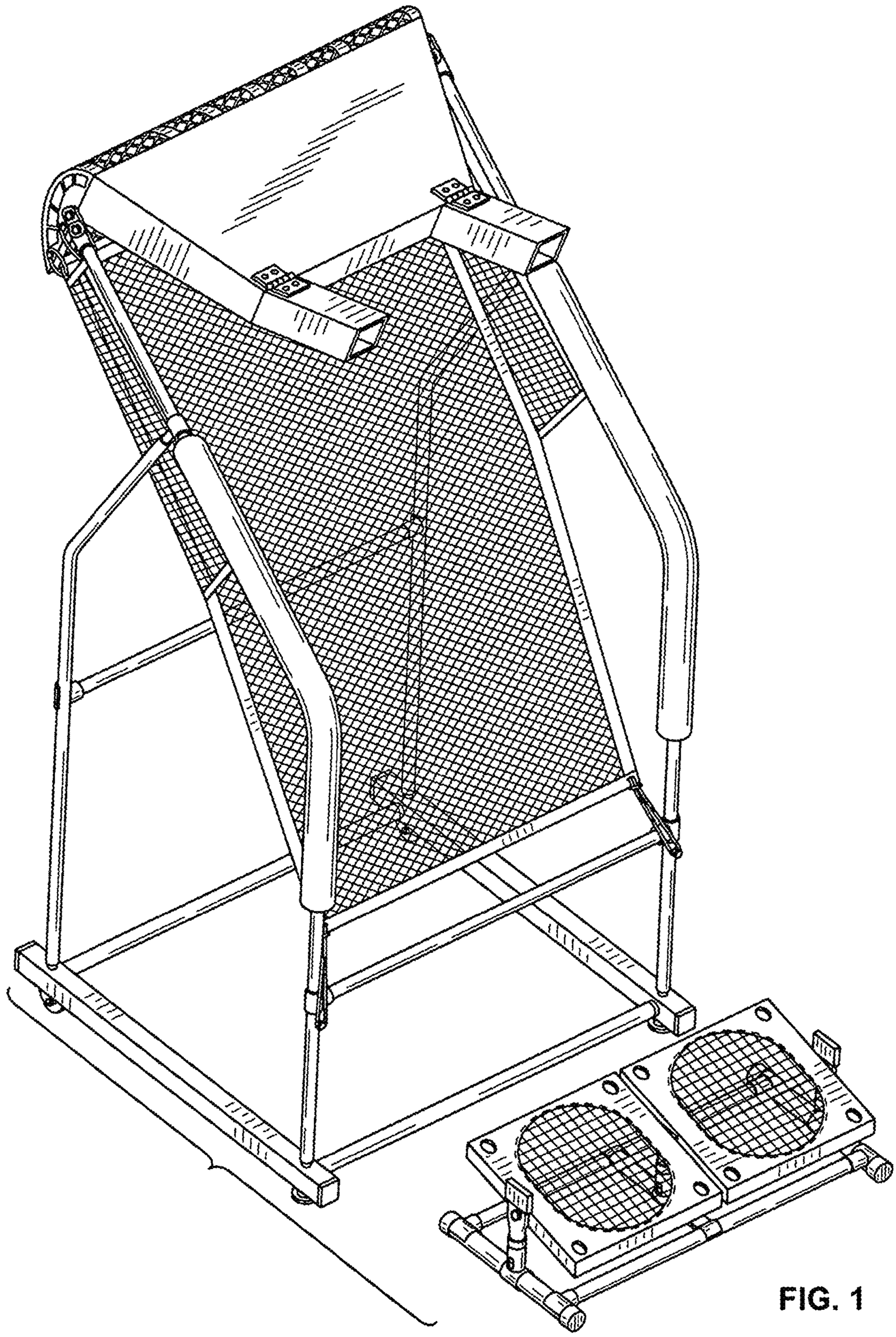

FIG. 1

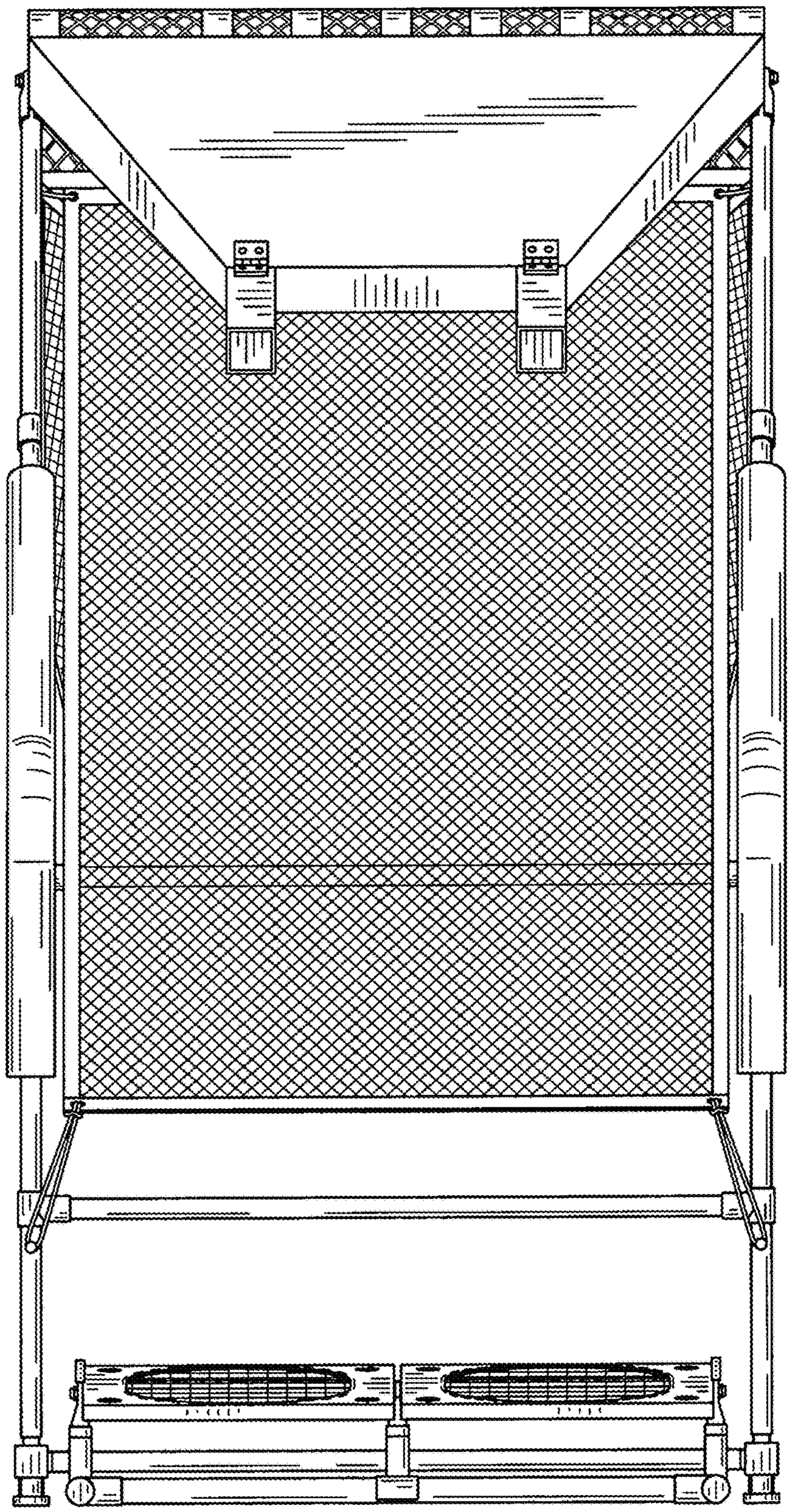

FIG. 2

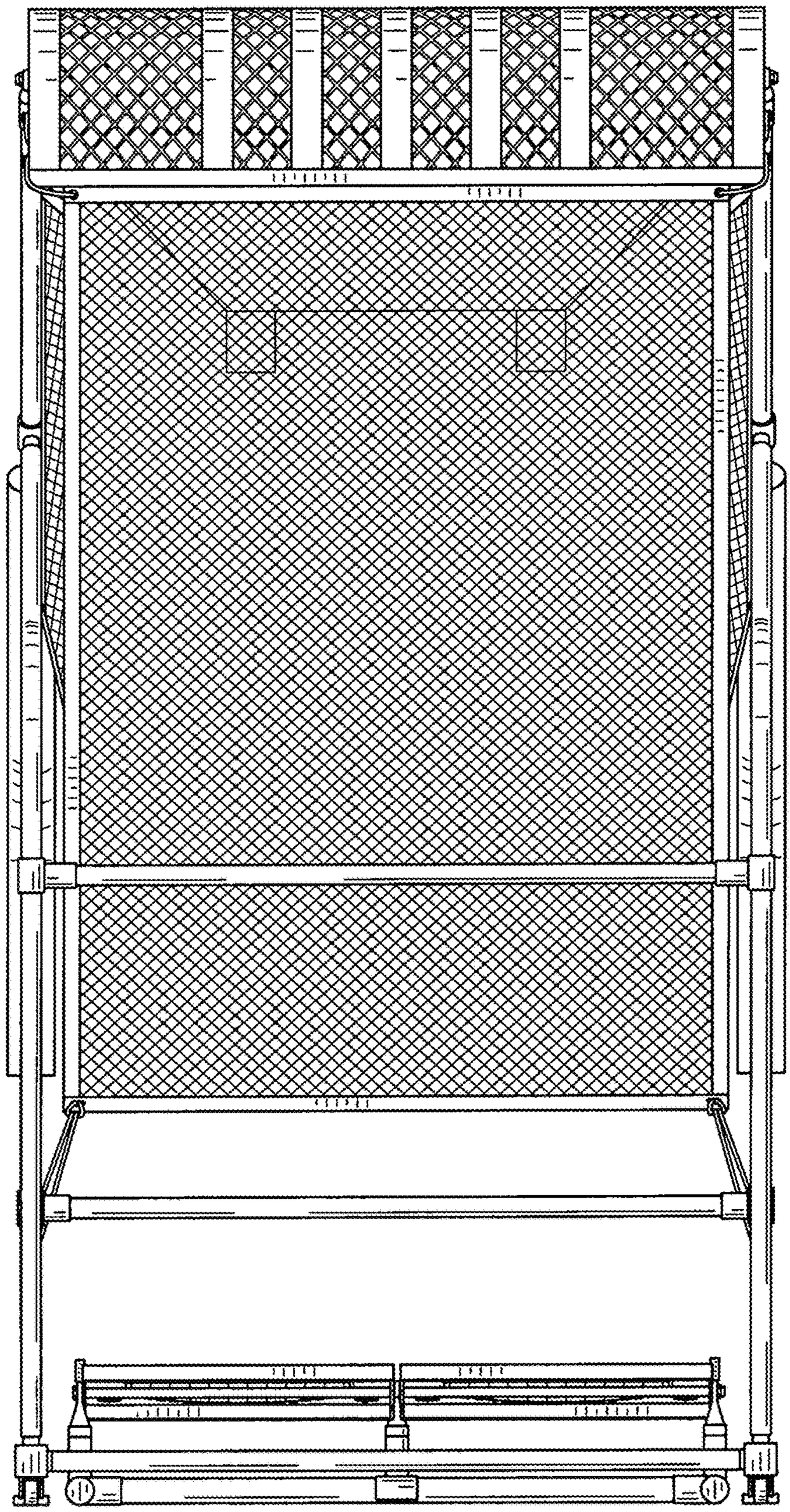

FIG. 3

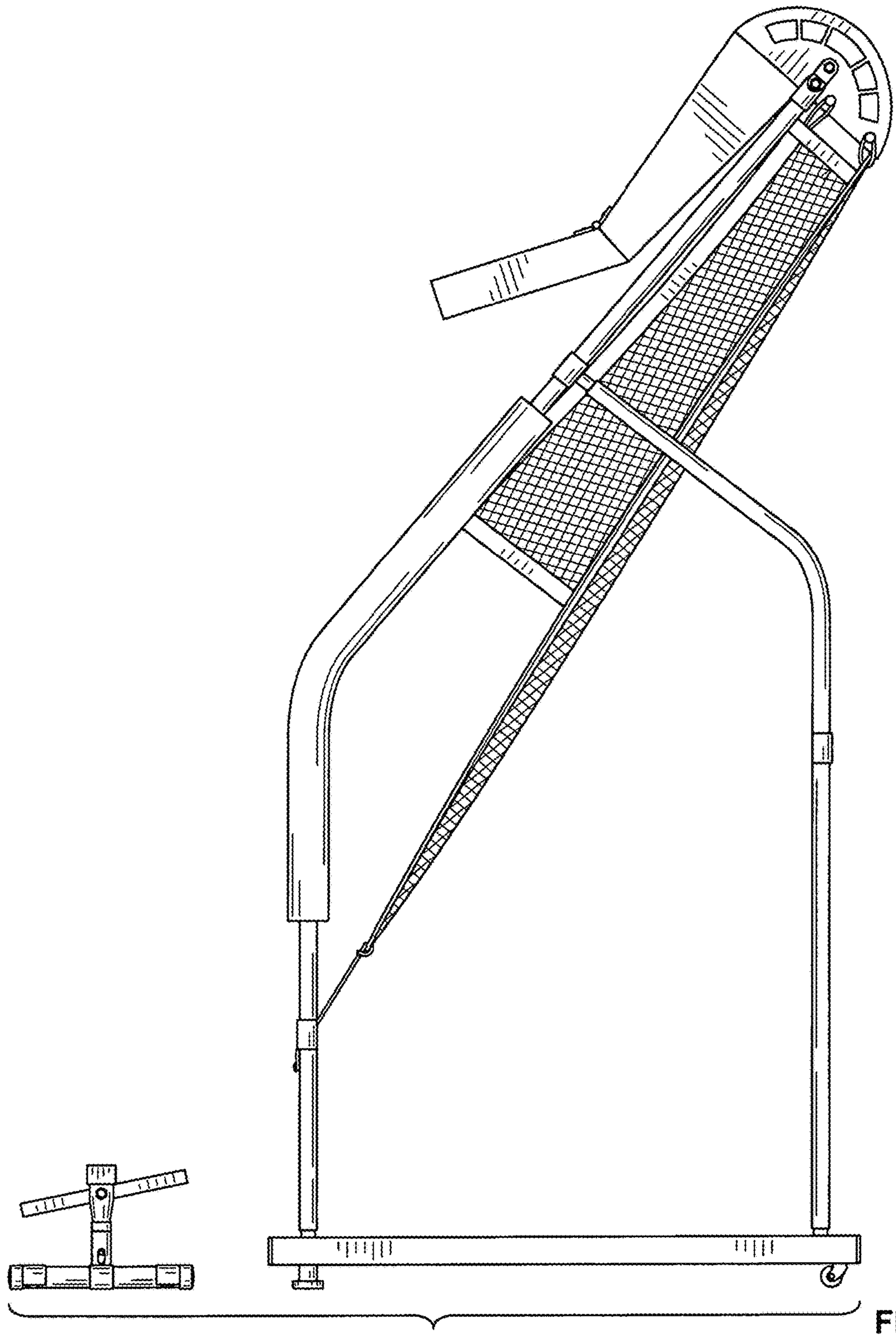

FIG. 4

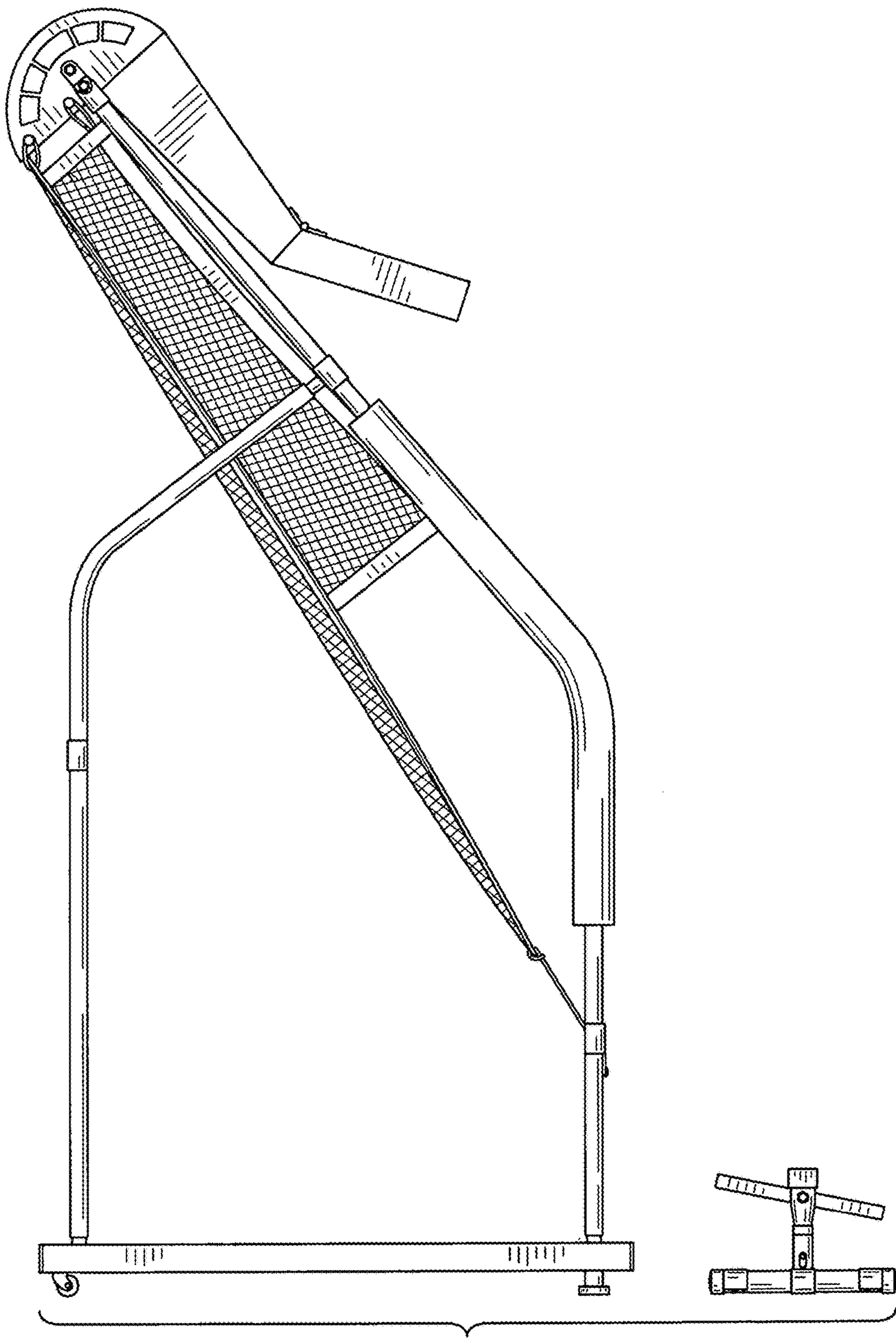

FIG. 5

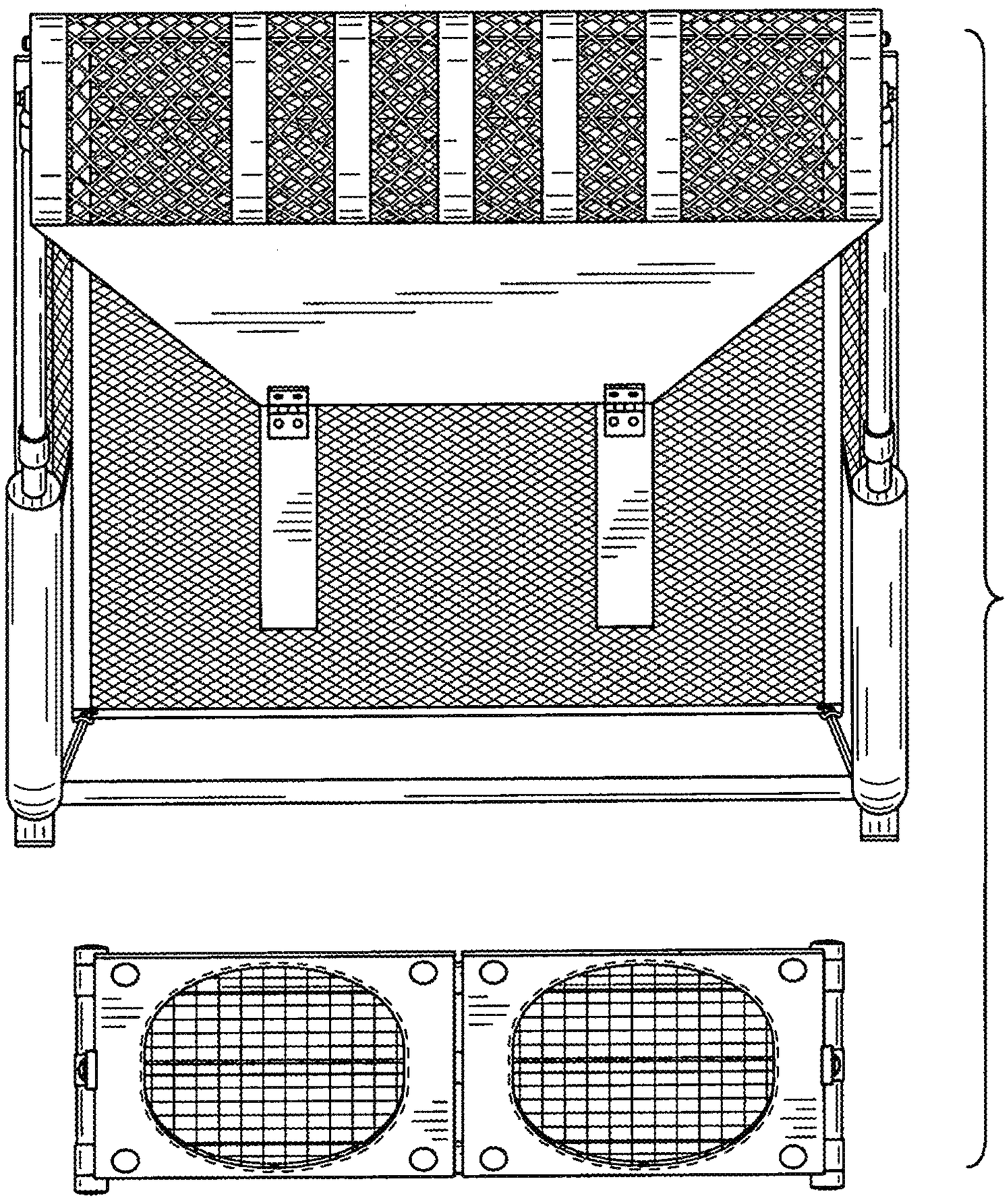

FIG. 6

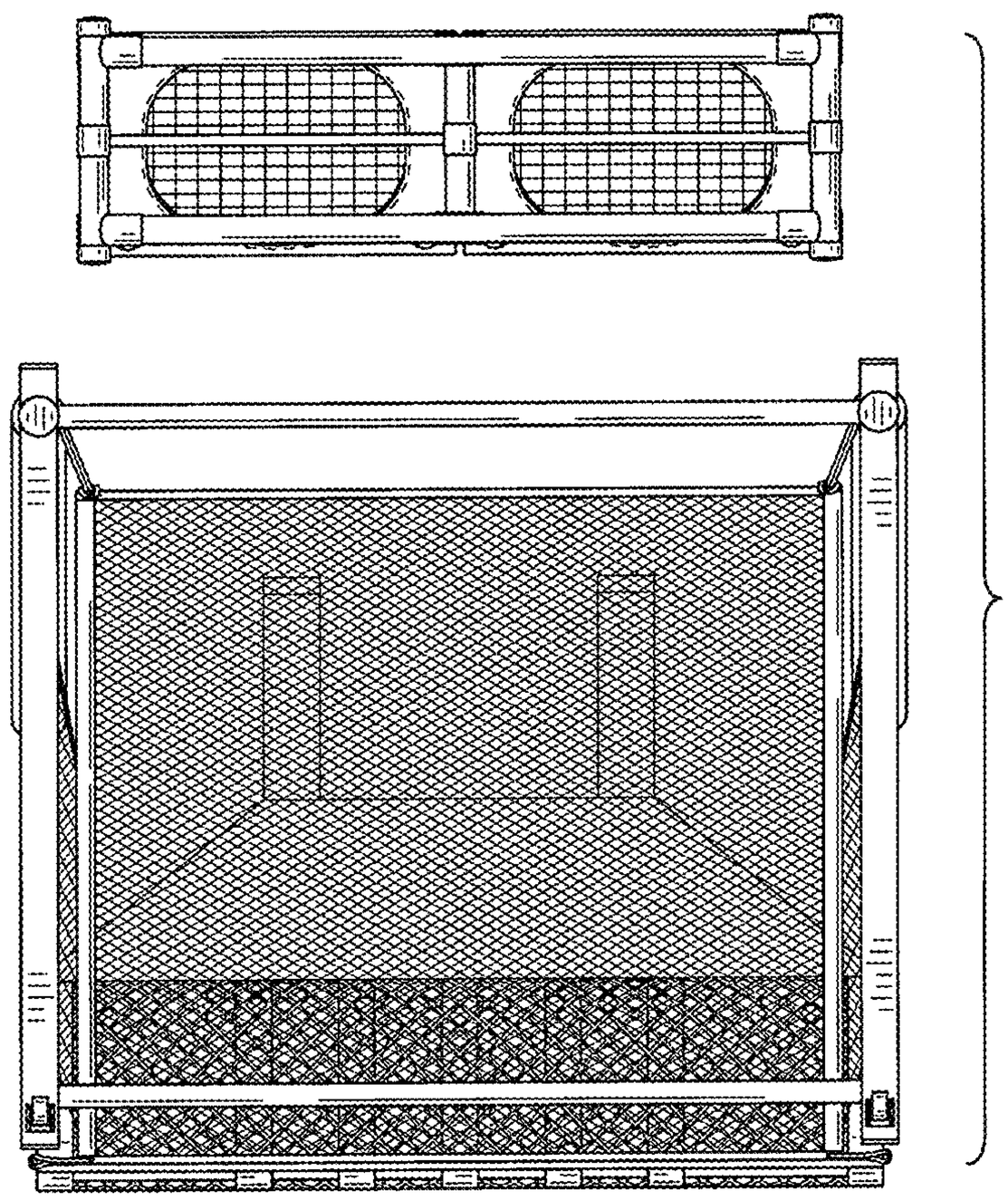

FIG. 7