US00D787759S

(12) United States Design Patent

Geyer et al.

(10) Patent No.: US D787,759 S
(45) Date of Patent: ** May 23, 2017

(54) **WASHER AND/OR DRYING MACHINE**

(71) Applicant: **BSH BOSCH UND SIEMENS HAUSGERAETE GMBH**, Munich (DE)

(72) Inventors: **Johannes Geyer**, Haar (DE); **Florian Metz**, Unterföhring (DE); **Roger Münstermann**, München (DE); **Carsten Weber**, Aalen (DE)

(73) Assignee: **BSH Hausgeräte GmbH**, Munich (DE)

(**) Term: **14 Years**

(21) Appl. No.: **29/496,161**

(22) Filed: **Jul. 10, 2014**

Related U.S. Application Data

(62) Division of application No. 29/468,223, filed on Sep. 27, 2013, now Pat. No. Des. 712,603, which is a (Continued)

(30) **Foreign Application Priority Data**

Sep. 2, 2011 (EM) 001293799

(51) **LOC (10) Cl.** **15-05**

(52) **U.S. Cl.**
USPC **D32/6**

(58) **Field of Classification Search**
USPC D32/1, 5–6, 8, 25, 28, 29
(Continued)

(56) **References Cited**

U.S. PATENT DOCUMENTS

D177,010 S * 3/1956 Boldt D32/6
D236,152 S * 7/1975 Yamamoto D32/8
(Continued)

OTHER PUBLICATIONS

Parent; U.S. Appl. No. 29/468,223, filed Sep. 27, 2013, Geyer et al.

Primary Examiner — Michael A. Pratt
Assistant Examiner — Michelle E Wilson

(74) *Attorney, Agent, or Firm* — Nixon & Vanderhye P.C.

(57) **CLAIM**

The ornamental design for a washing and/or drying machine, as shown and described.

DESCRIPTION

FIG. **1** is a front perspective view of a washing and/or drying machine according to a first embodiment showing our new ornamental design;
FIG. **2** is a front view thereof;
FIG. **3** is a left side view thereof;
FIG. **4** is a top view thereof;
FIG. **5** is a right side view thereof;
FIG. **6** is a front perspective view of a washing and/or drying machine according to a second embodiment showing our new ornamental design;
FIG. **7** is a front view thereof;
FIG. **8** is a left side view thereof;
FIG. **9** is a top view thereof;
FIG. **10** is a right side view thereof;
FIG. **11** is a front perspective view of a washing and/or drying machine according to a fifth embodiment showing our new ornamental design;
FIG. **12** is a front view thereof;
FIG. **13** is a left side view thereof;
FIG. **14** is a top view thereof;
FIG. **15** is a right side view thereof;
FIG. **16** is a front perspective view of a washing and/or drying machine according to a sixth embodiment showing our new ornamental design;
FIG. **17** is a front view thereof;
FIG. **18** is a left side view thereof;
FIG. **19** is a top view thereof; and,
FIG. **20** is a right side view thereof.

The rear and bottom surfaces of the washing and/or drying machine are unornamented and therefore not shown. In various figures, the door is shown with transparent shading, but the interior componentry/structure therein is not shown for the sake of clarity, or is shown in broken lines, which forms no part of the claimed design. The broken lines represent environment or structure that does not form a part of the claimed design.

The use of stipple-type shading in various figures indicates a contrast in appearance/material.

1 Claim, 20 Drawing Sheets

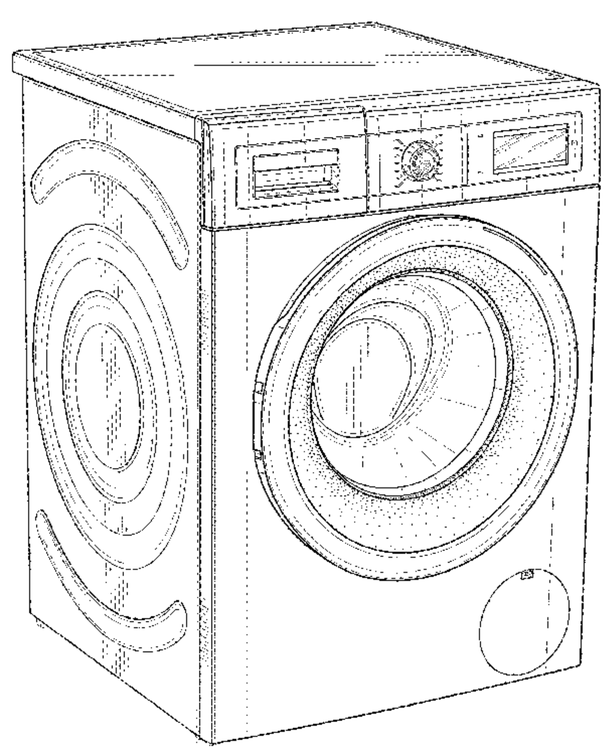

Related U.S. Application Data

division of application No. 29/414,611, filed on Mar. 1, 2012, now Pat. No. Des. 693,973.

(58) **Field of Classification Search**

CPC D06F 33/02; D06F 39/02; D06F 2204/065; D06F 25/00; D06F 35/006; D06F 58/00; D06F 58/02; D06F 58/04; D06F 58/20; D06F 23/04; G05B 19/042

See application file for complete search history.

(56) **References Cited**

U.S. PATENT DOCUMENTS

D456,572 S 4/2002 Resuello et al.
D477,898 S 7/2003 Geyer
D561,957 S * 2/2008 Browne D32/6
D563,062 S 2/2008 Eicher et al.
D565,809 S 4/2008 Eicher et al.
D577,162 S * 9/2008 Shail D32/6
D589,217 S 3/2009 Park et al.
D595,908 S 7/2009 Park et al.
D610,757 S 2/2010 Yalcin et al.
D610,758 S 2/2010 Yalcin et al.
D611,206 S * 3/2010 Yalcin D32/6
D611,207 S 3/2010 Yalcin et al.
D617,960 S * 6/2010 Bohm D32/6
D628,755 S 12/2010 Helot et al.
D635,727 S 4/2011 Jeon et al.
D653,822 S 2/2012 Geyer et al.
D659,307 S 5/2012 Geyer et al.
D675,793 S * 2/2013 Geyer D32/6
D693,973 S 11/2013 Geyer et al.
D694,966 S 12/2013 Borjesson
D696,478 S 12/2013 Geyer et al.
D703,883 S * 4/2014 Ha D32/6
D703,884 S * 4/2014 Ha D32/6
D703,885 S * 4/2014 Ha D32/6
D712,603 S * 9/2014 Geyer D32/6
D731,132 S * 6/2015 Ha D32/28
D758,681 S * 6/2016 Park D32/25

* cited by examiner

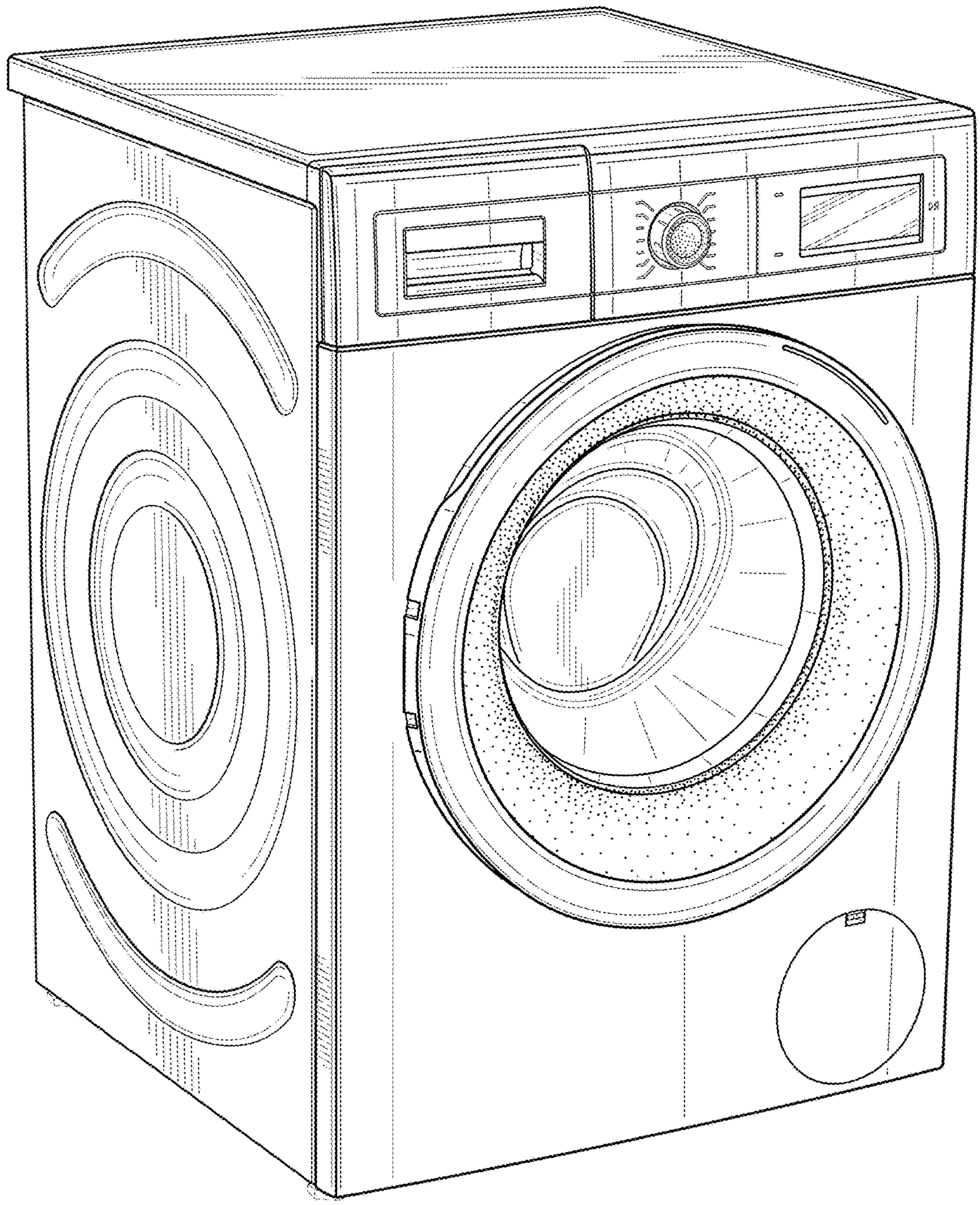

Fig. 1

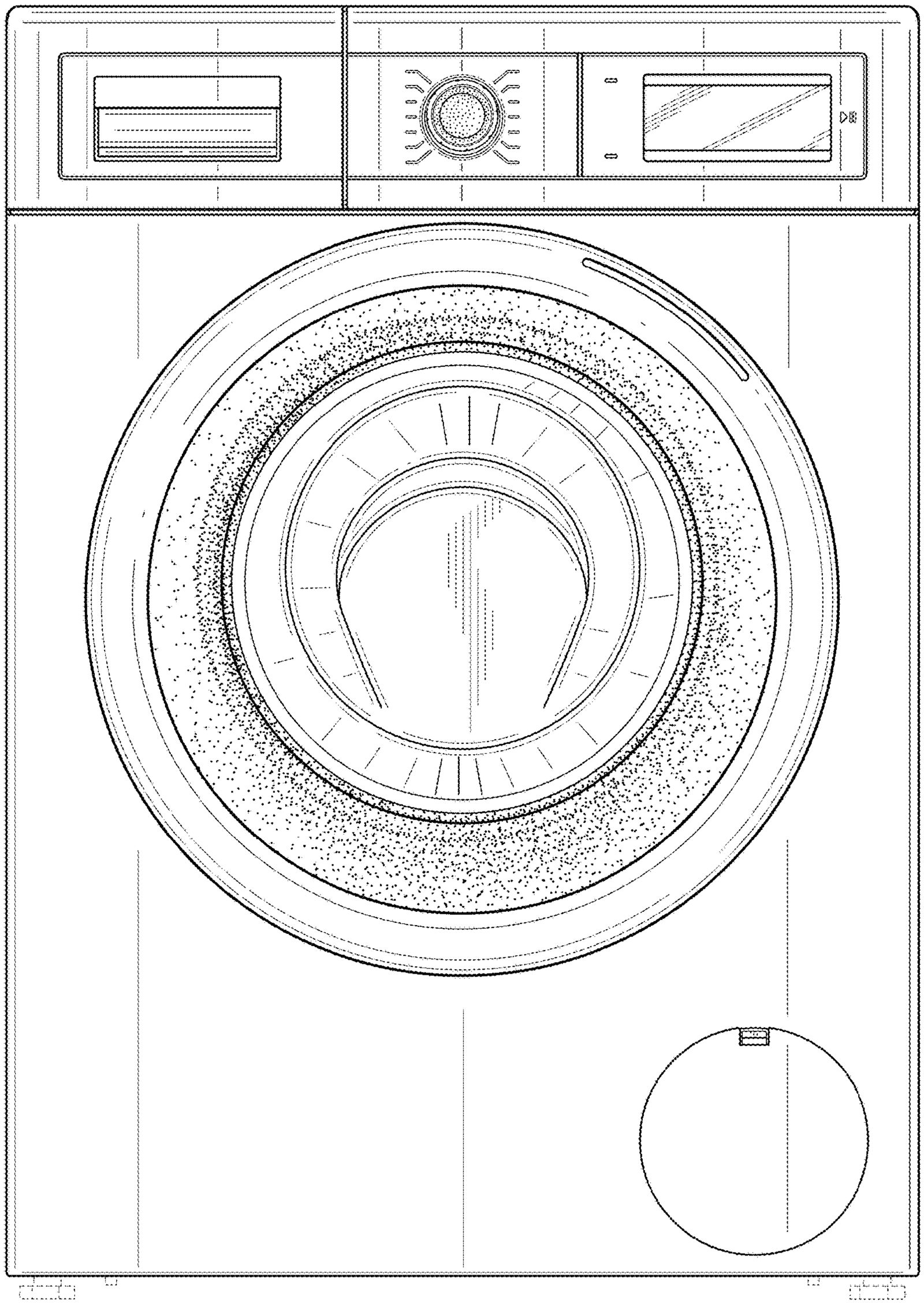

Fig. 2

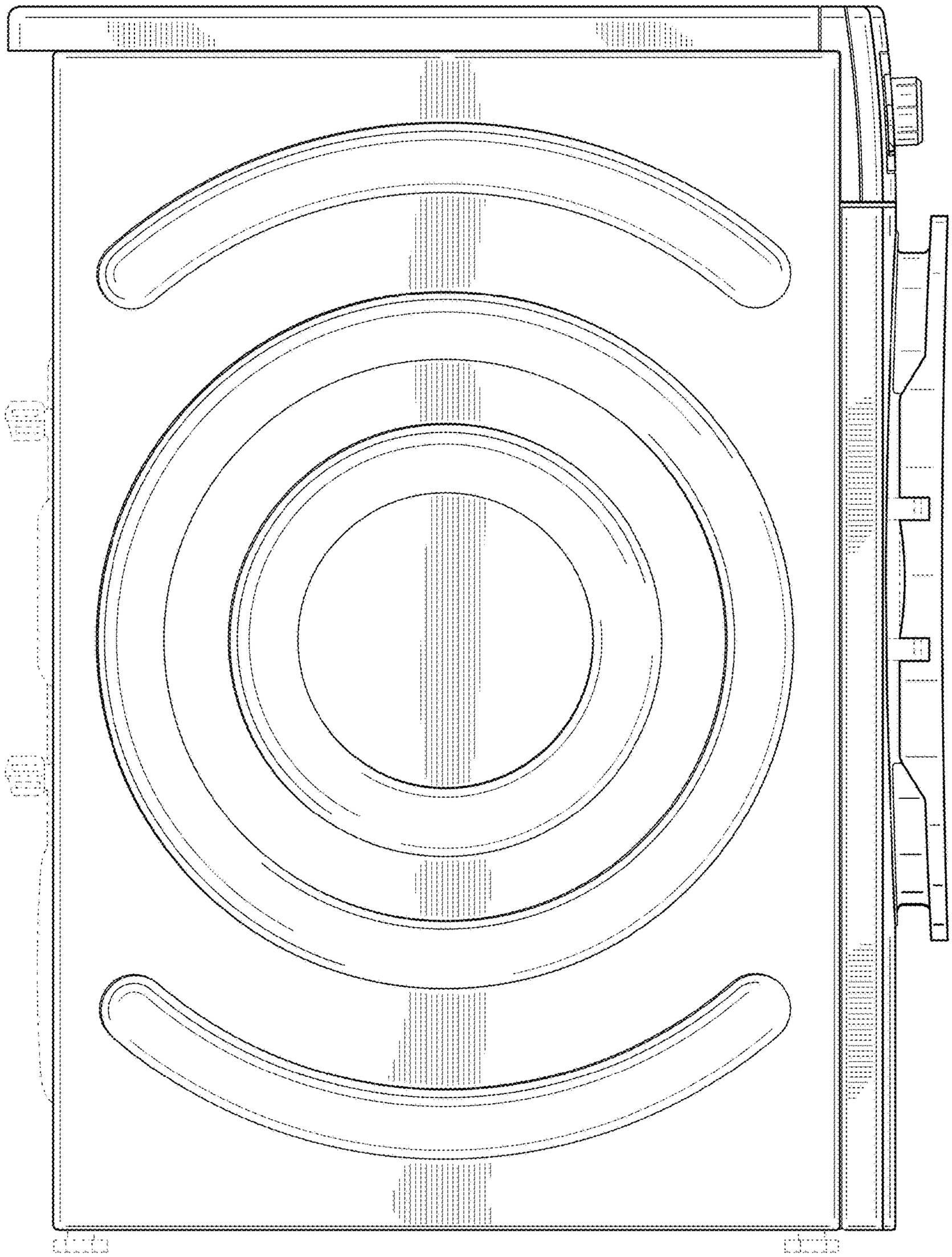

Fig. 3

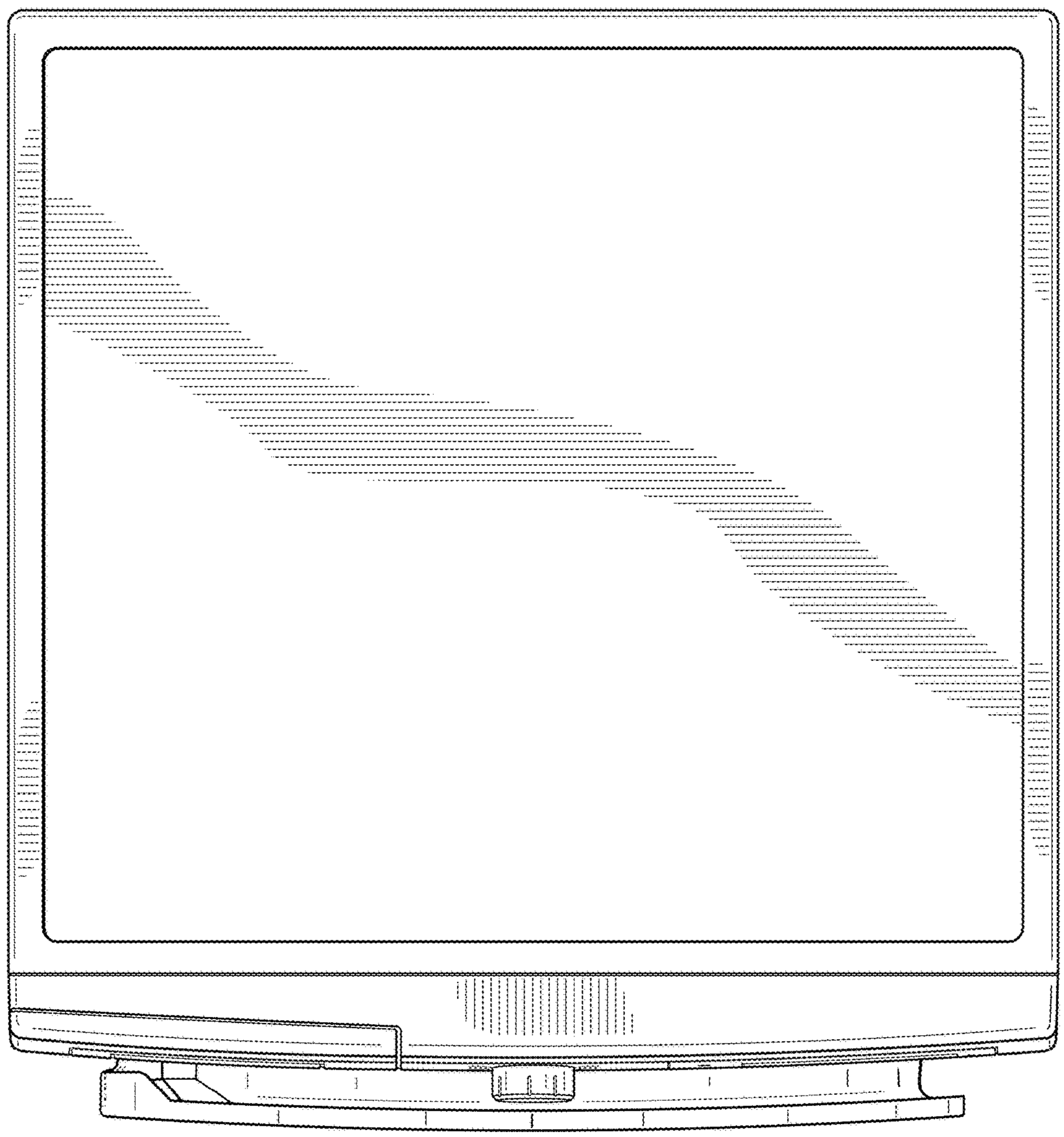

Fig. 4

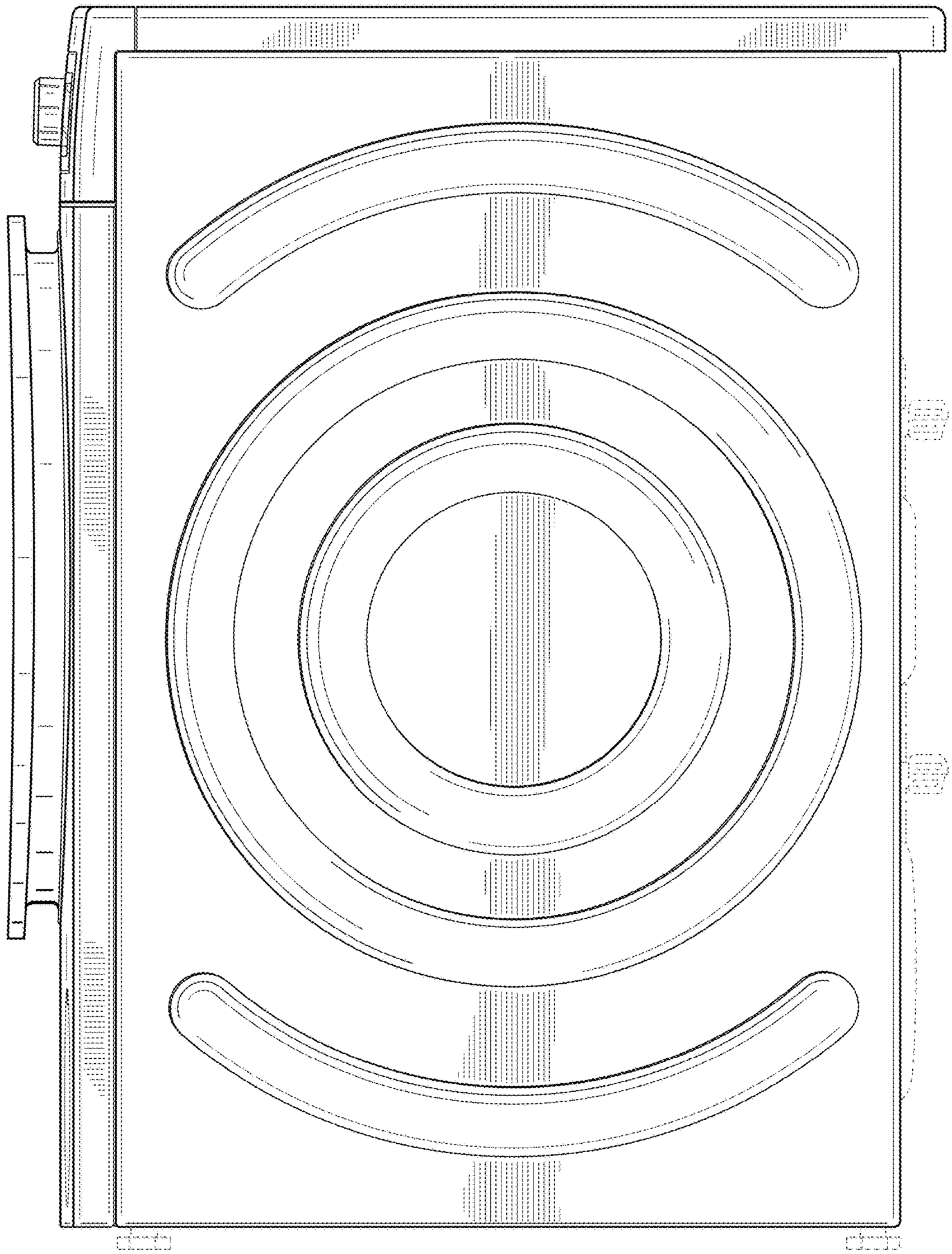

Fig. 5

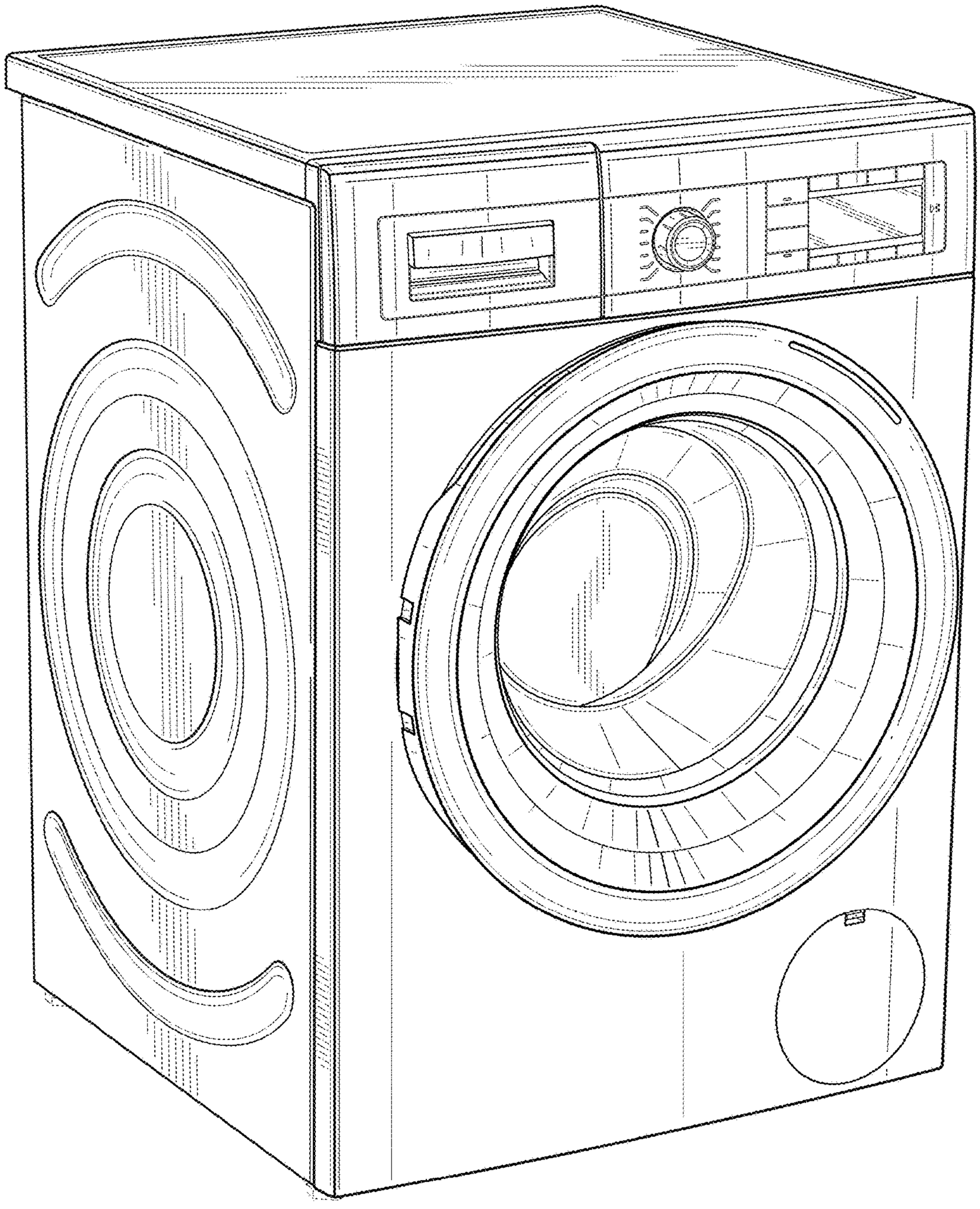

Fig. 6

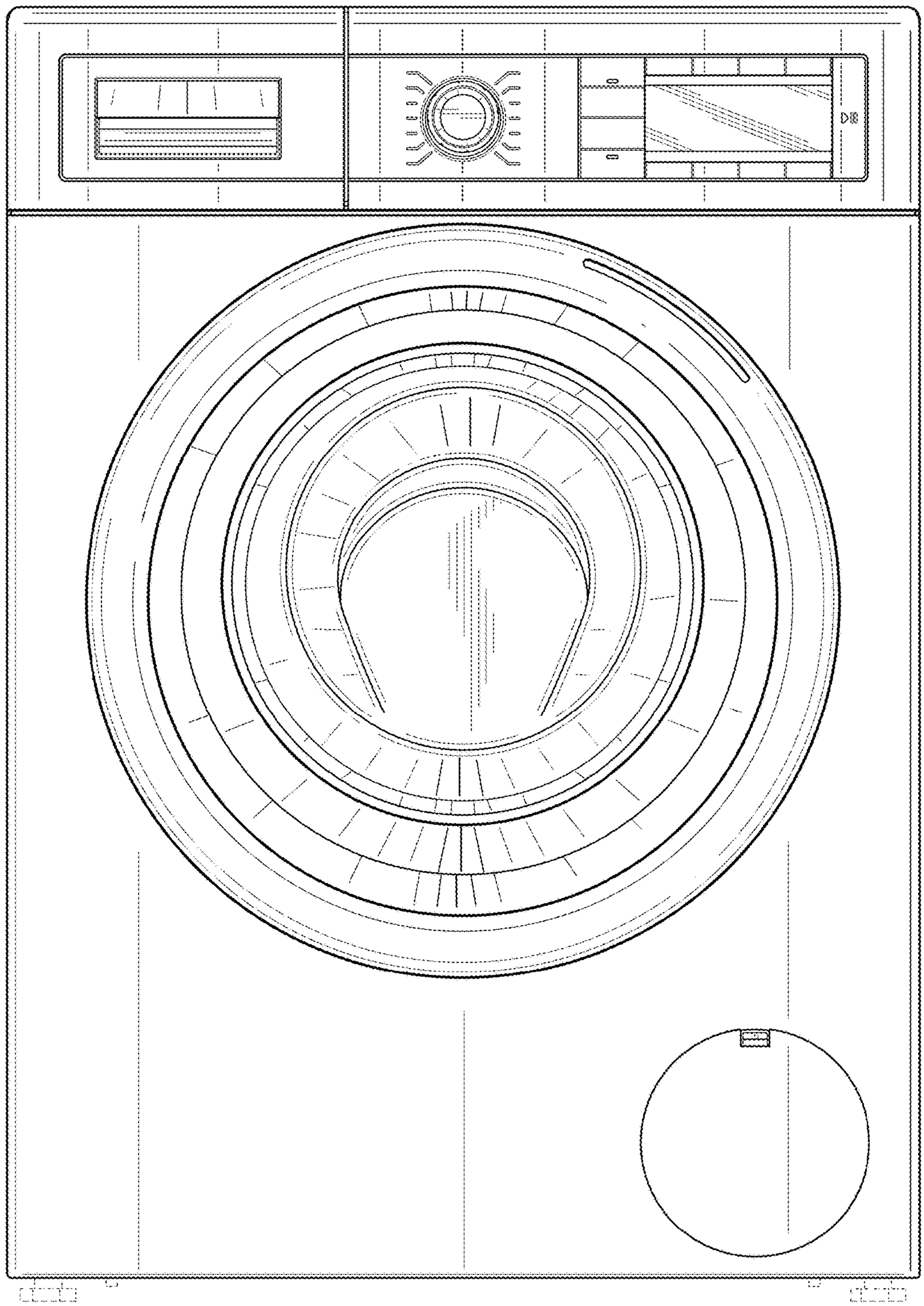

Fig. 7

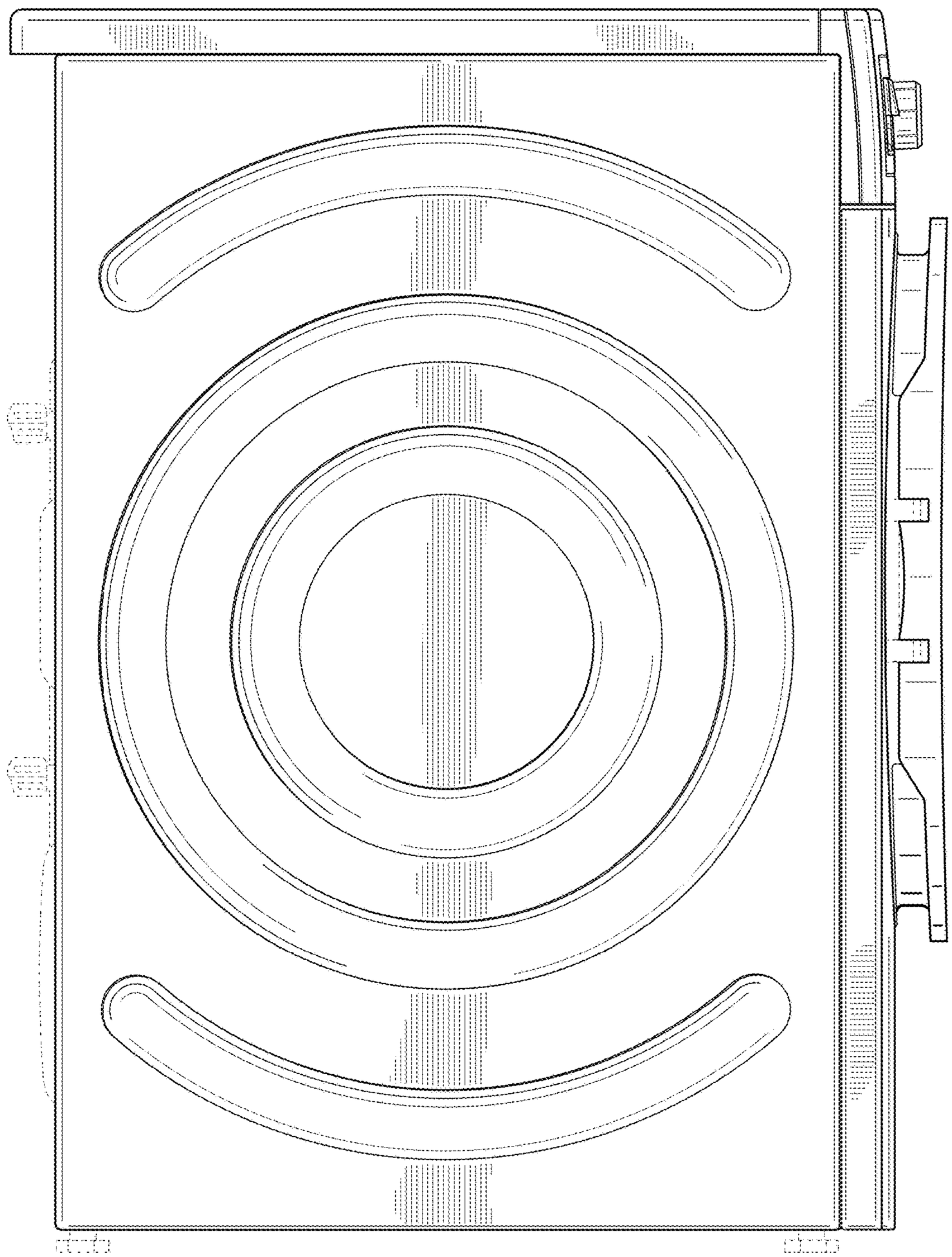

Fig. 8

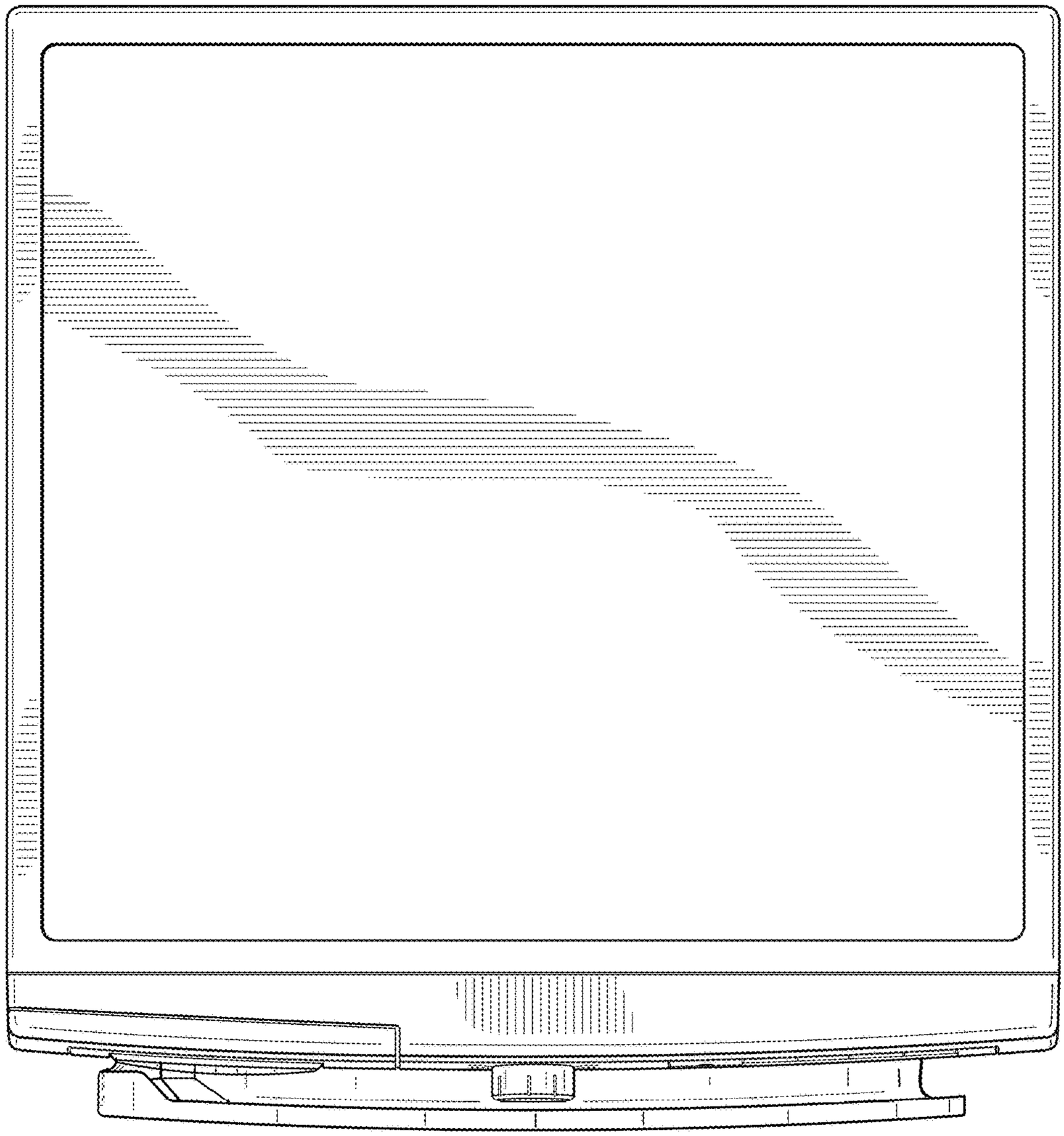

Fig. 9

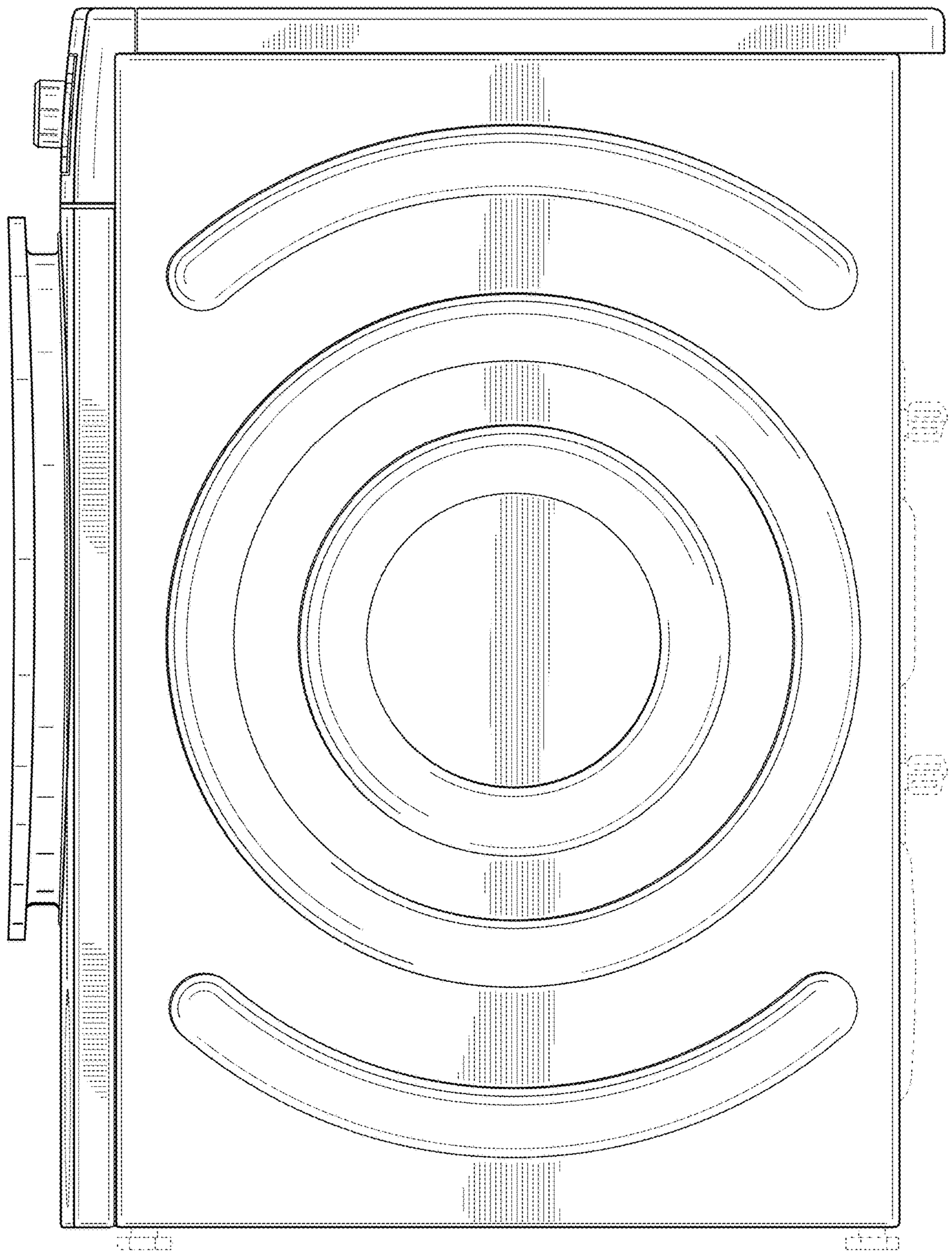

Fig. 10

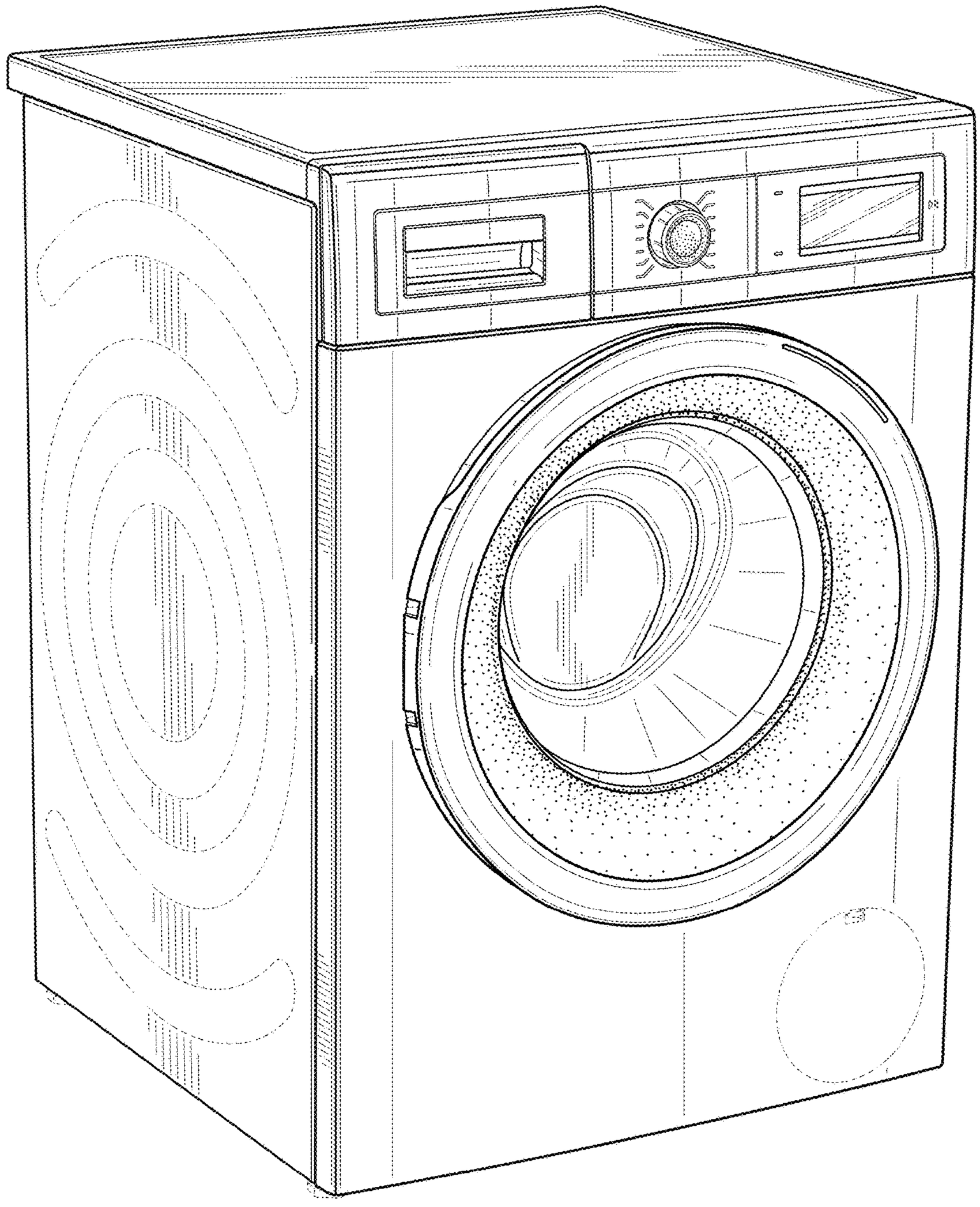

Fig. 11

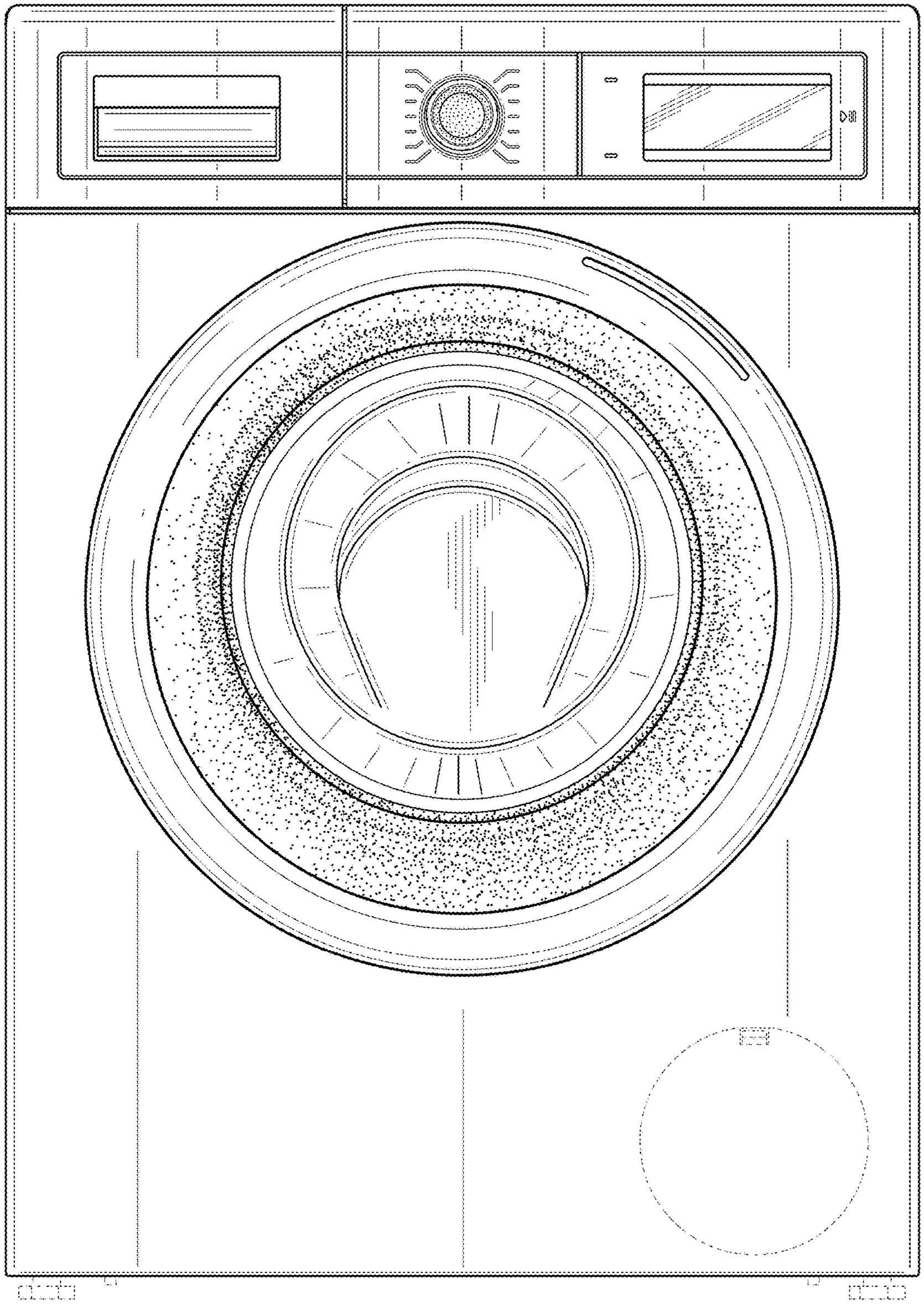

Fig. 12

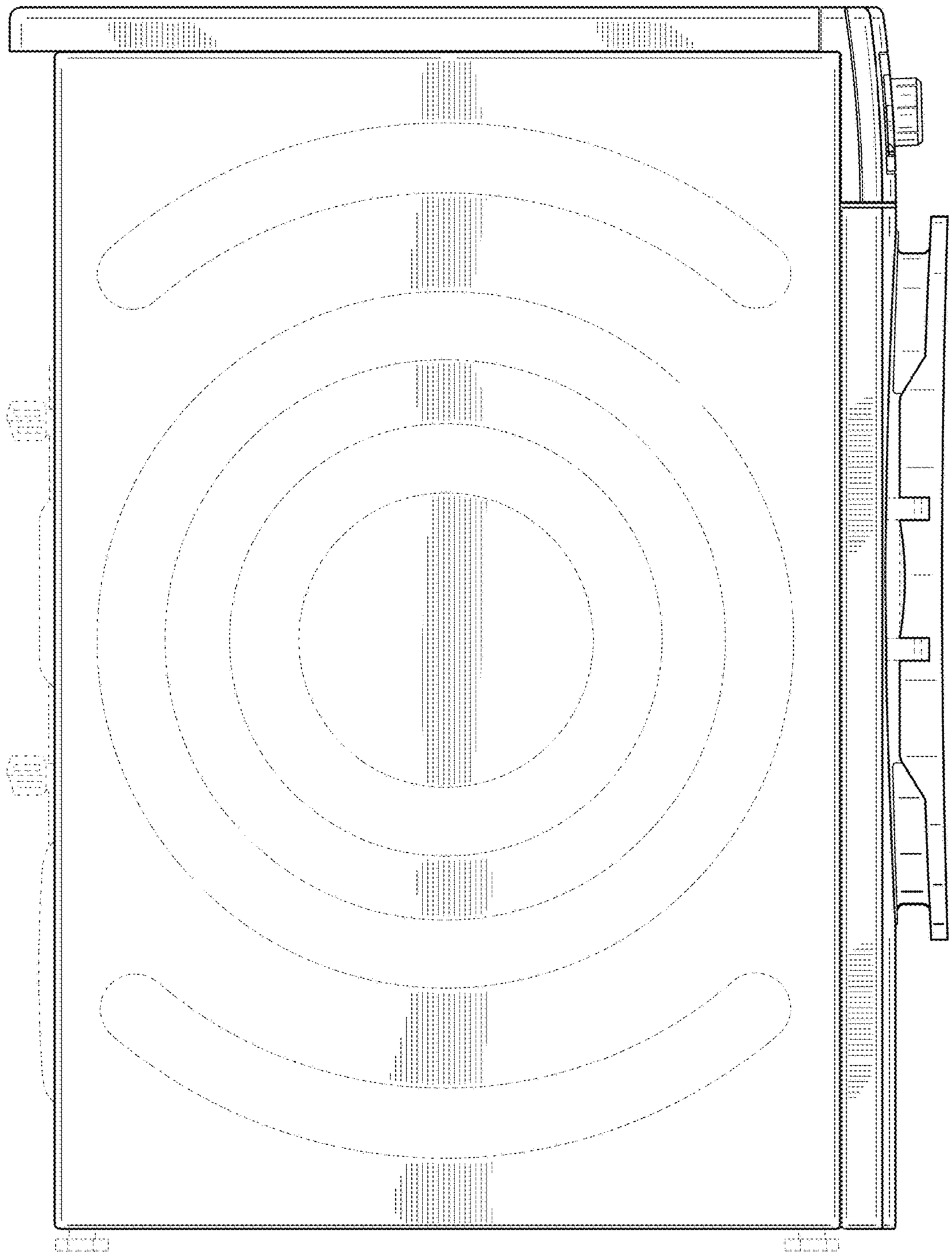

Fig. 13

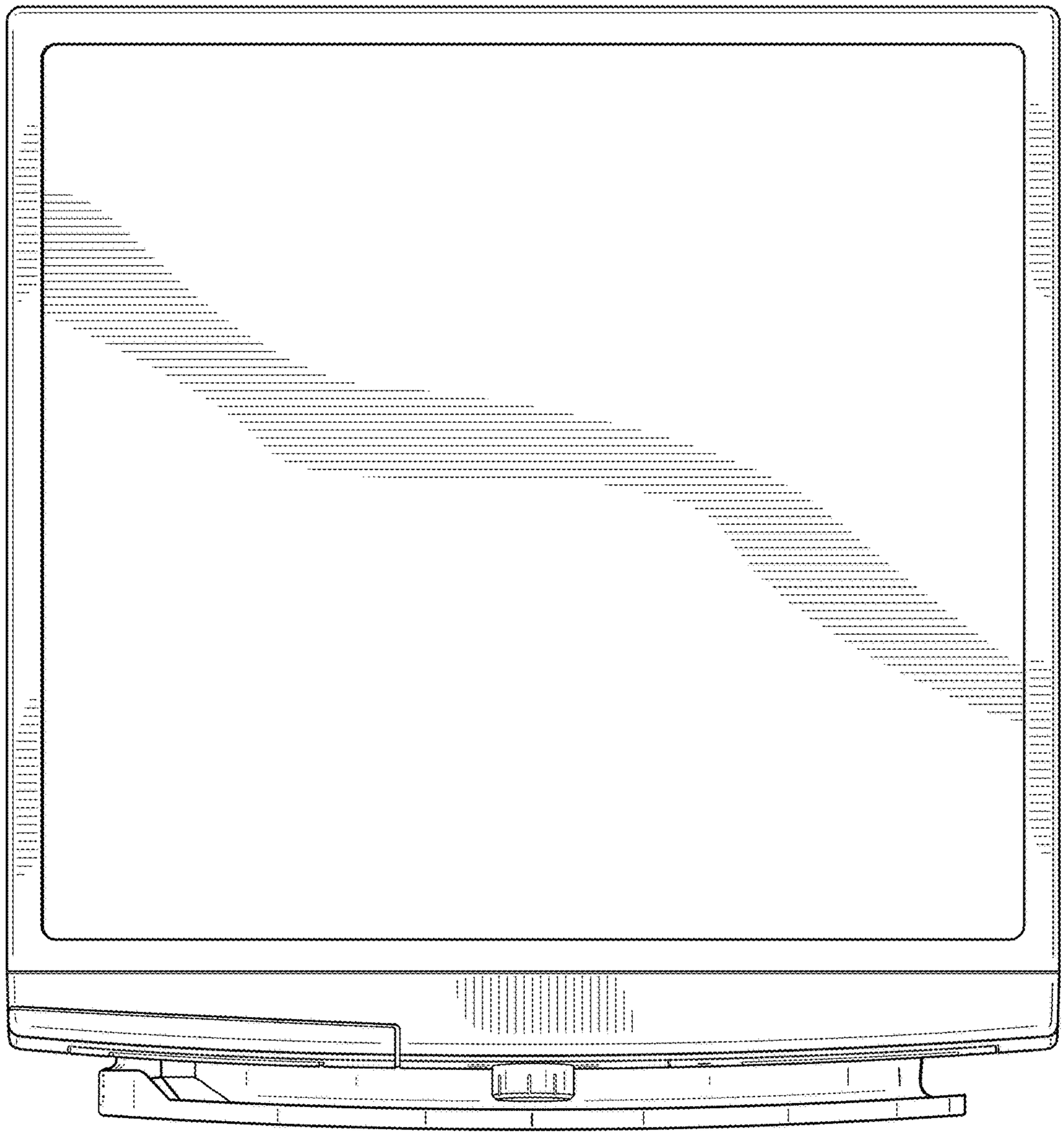

Fig. 14

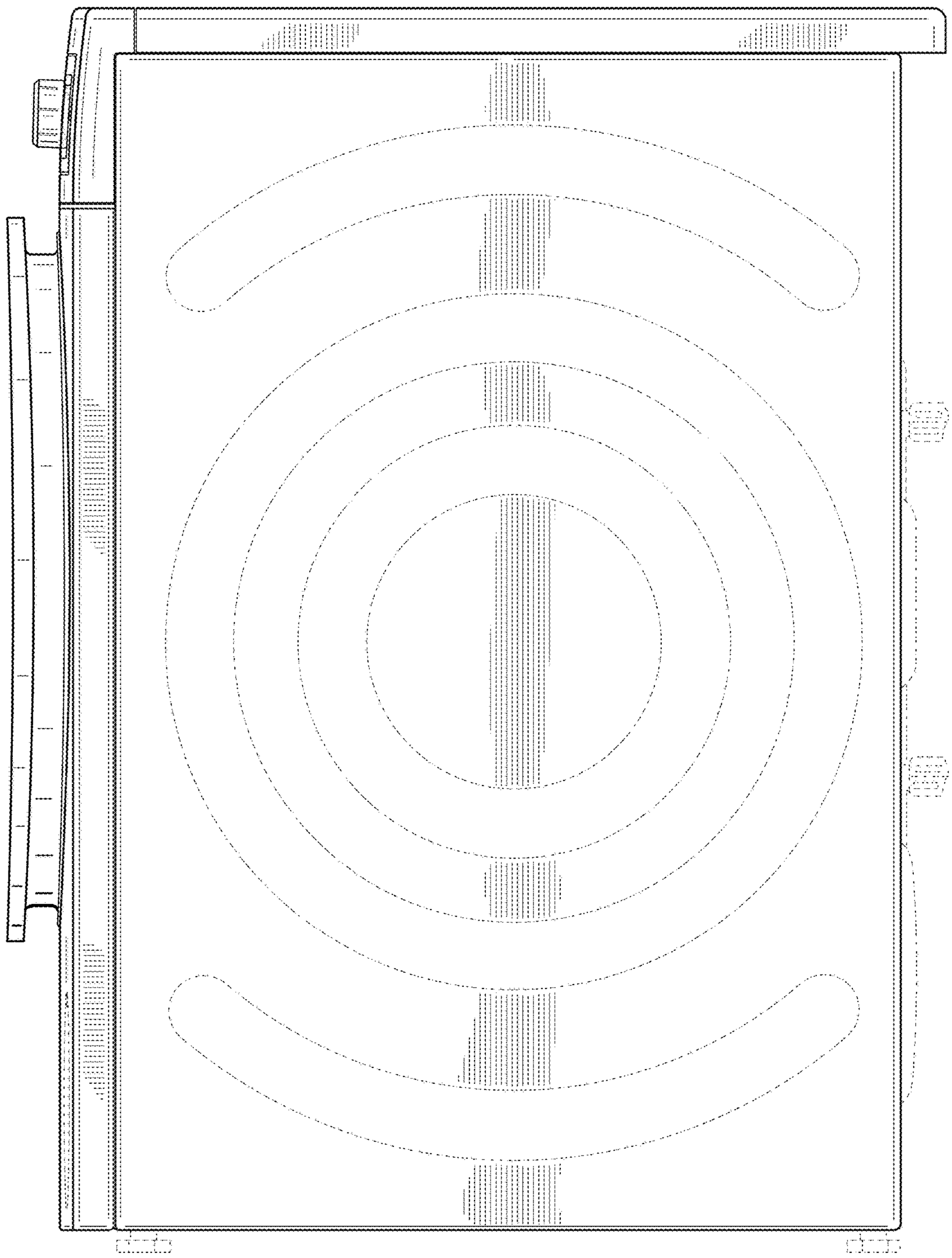

Fig. 15

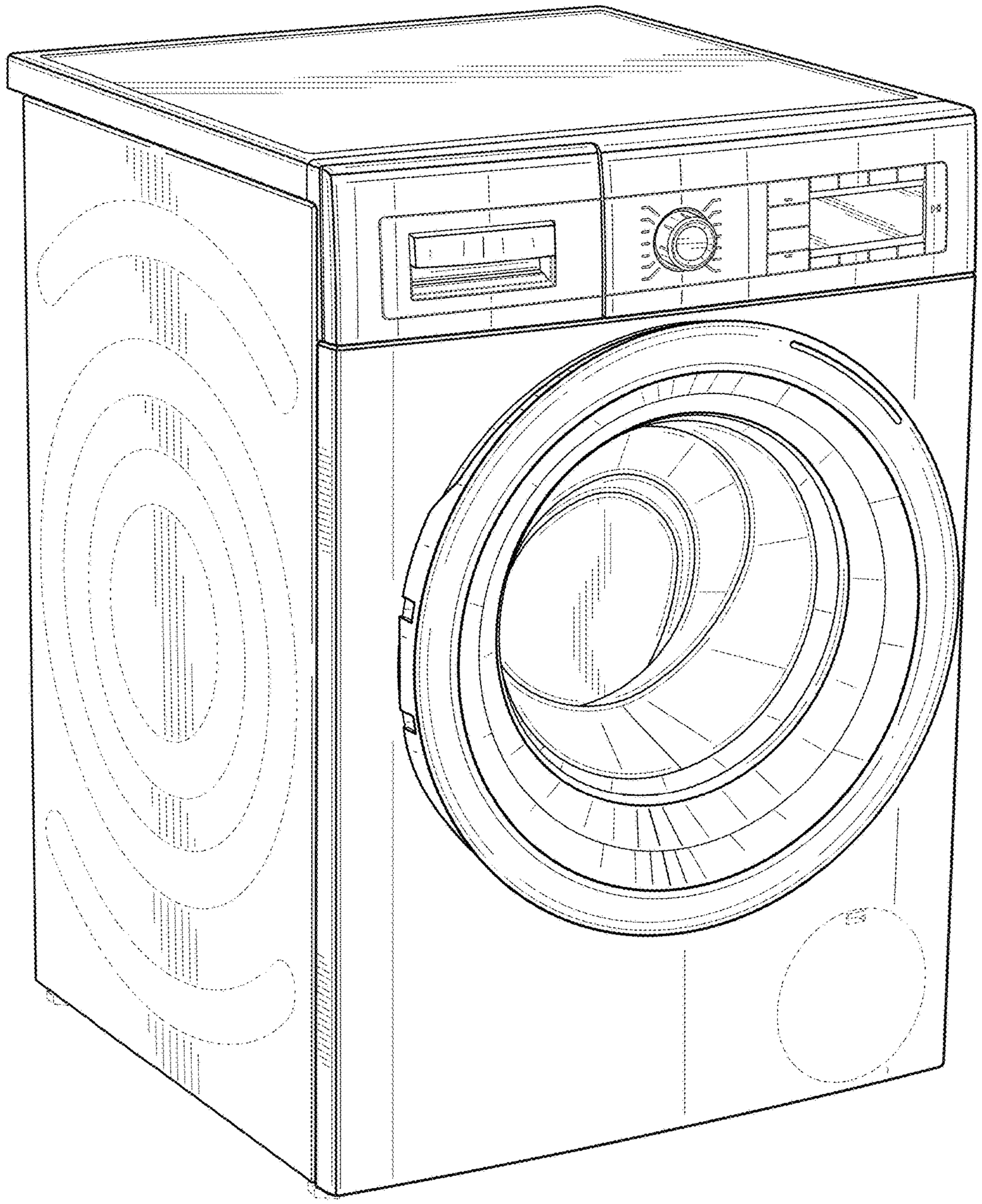

Fig. 16

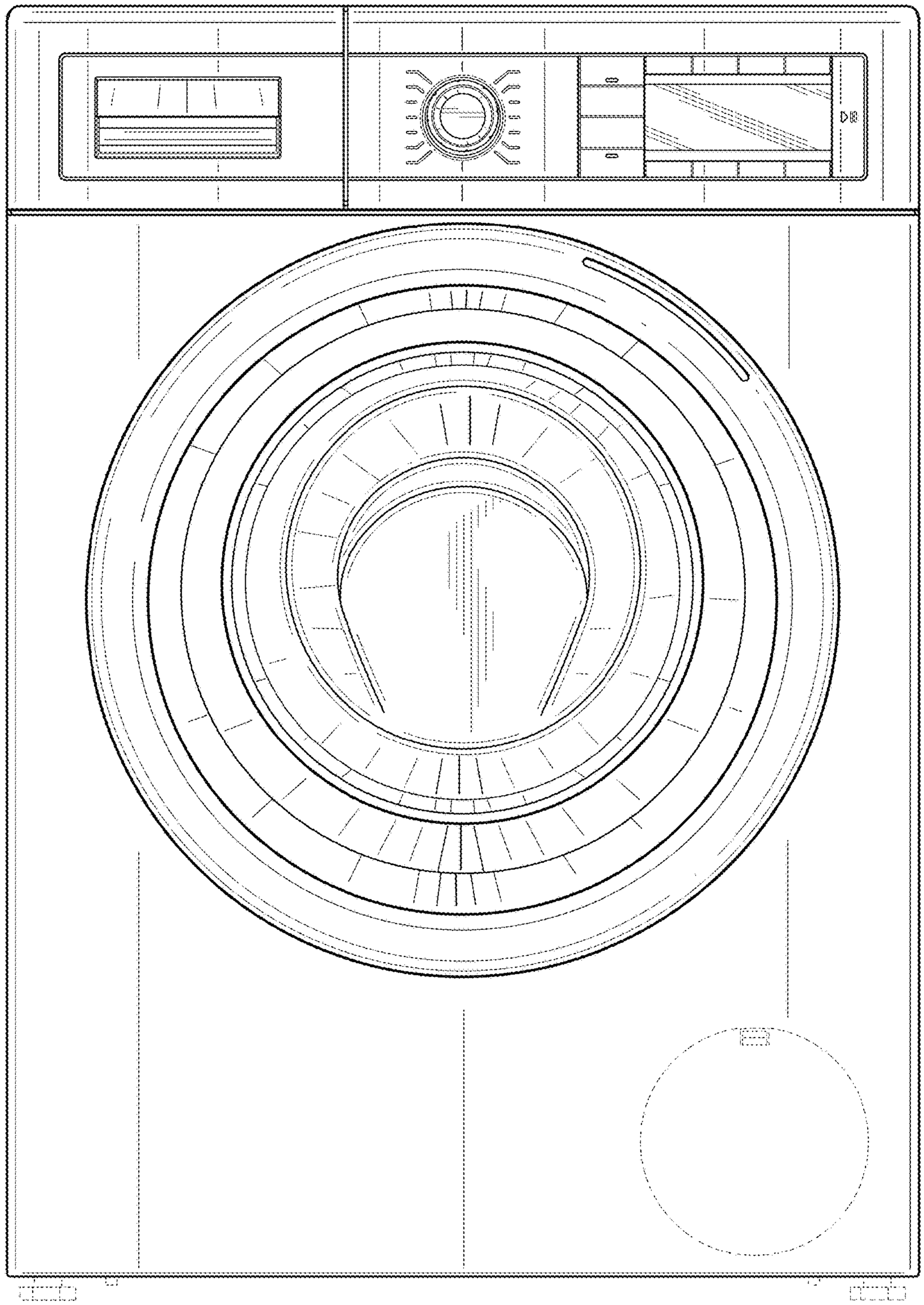

Fig. 17

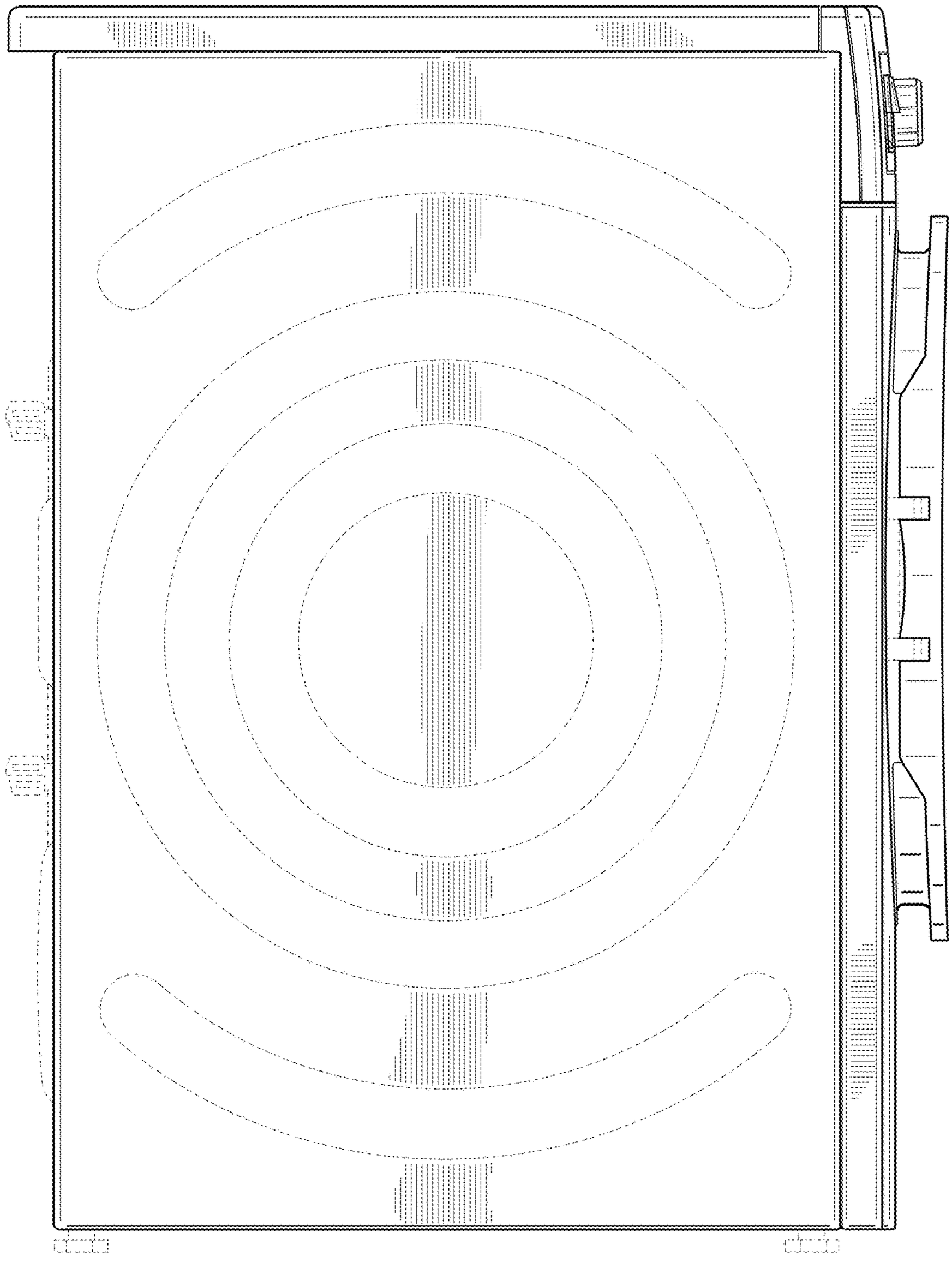

Fig. 18

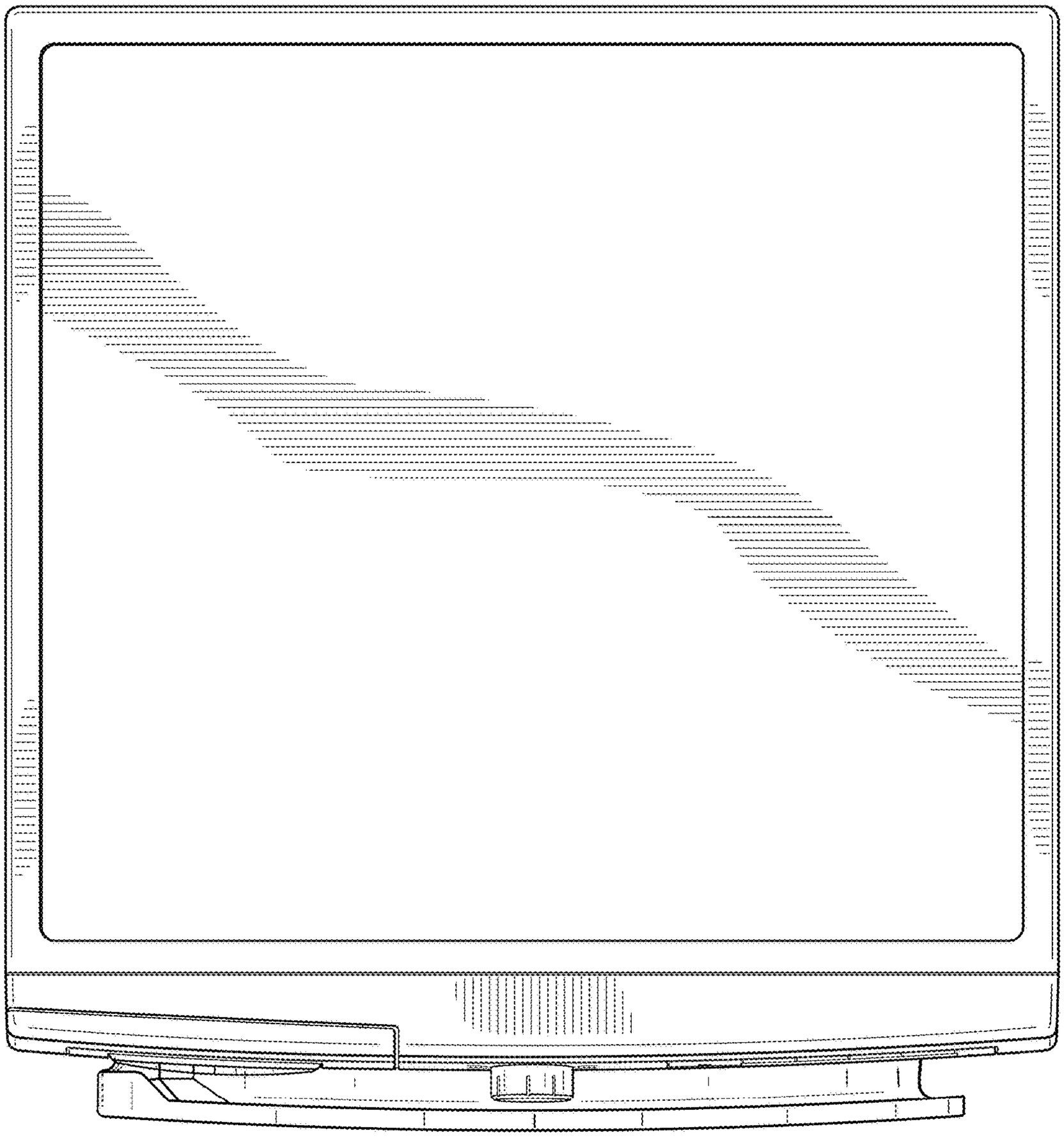

Fig. 19

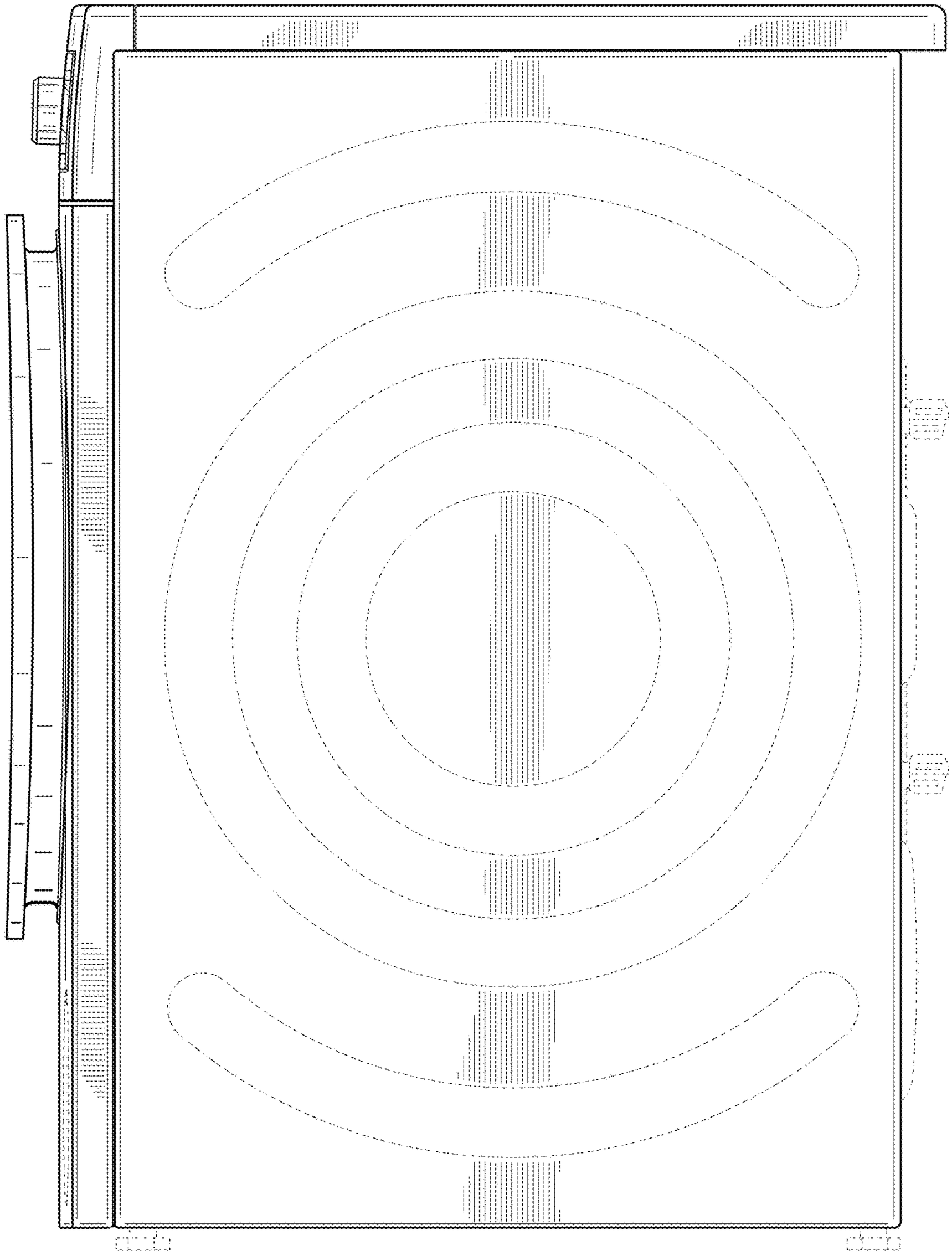

Fig. 20