US00D787233S

(12) United States Design Patent
Wang

(10) Patent No.: US D787,233 S
(45) Date of Patent: ** May 23, 2017

(54) **NECK PILLOW**

(71) Applicant: **Chi-Sheng Wang**, Taipei (TW)

(72) Inventor: **Chi-Sheng Wang**, Taipei (TW)

(**) Term: **15 Years**

(21) Appl. No.: **29/554,408**

(22) Filed: **Feb. 11, 2016**

(51) **LOC (10) Cl.** **06-09**

(52) **U.S. Cl.**
USPC **D6/601**

(58) **Field of Classification Search**
USPC D6/333, 349, 355, 375, 388, 512, 563, D6/564, 595, 596, 601, 604, 611, 707, D6/715, 716, 716.1; D24/183–185, 234; D21/803, 804, 805, 809; 5/401, 420, 5/600, 630, 631, 632, 633, 635, 636, 638, 5/639, 646, 652, 652.1, 655, 703, 730; 297/1, 2, 4, 93, 180.11, 195.1, 195.11, 297/195.13, 393, 397, 452.12, 452.14, 297/452.15, 452.21, 452.24, 452.26, 297/452.48, 452.62, 482
CPC A47G 9/10; A47G 9/1009; A47G 9/1018; A47G 9/1027; A47G 9/1036; A47G 9/1045; A47G 9/1063; A47G 9/1072; A47G 9/1081; A47G 9/109; A47C 7/021; A47C 27/00
See application file for complete search history.

(56) **References Cited**

U.S. PATENT DOCUMENTS

D277,059	S	*	1/1985	Boone	D6/601
D416,745	S	*	11/1999	Noyes	D6/601
D419,024	S	*	1/2000	Lenahan	D6/601
D450,517	S	*	11/2001	Darling	D6/596
6,457,195	B1	*	10/2002	Holste	A47C 7/383 5/636
6,640,977	B2	*	11/2003	Matthews Brown	A47C 7/383 206/770
6,760,934	B1	*	7/2004	Leach	A47C 20/021 5/631
D522,300	S	*	6/2006	Roberts	A47C 7/383 D6/601
D582,045	S	*	12/2008	James	D24/191
D582,713	S	*	12/2008	Baldwin	D6/601
D619,402	S	*	7/2010	Sternlight	D6/601
D637,439	S	*	5/2011	Mettler	D6/601
D664,799	S	*	8/2012	Schwingendorf	D6/601
D665,212	S	*	8/2012	Schwingendorf	D6/601
D727,069	S	*	4/2015	Ahroon	D3/295
D746,080	S	*	12/2015	Mittelstadt	D6/601
D757,391	S	*	5/2016	Paget	D1/106
D766,015	S	*	9/2016	Walker	A47C 7/383 D6/601
D769,649	S	*	10/2016	Vargas	D6/601
D770,806	S	*	11/2016	Canna	D6/601
9,526,360	B2	*	12/2016	Sternlight	A47G 9/10

(Continued)

Primary Examiner — Eric Goodman
Assistant Examiner — Sanjeev Paul
(74) *Attorney, Agent, or Firm* — Li & Cai Intellectual Property (USA) Office

(57) **CLAIM**

The ornamental design for neck pillow, as shown.

DESCRIPTION

FIG. **1** is a perspective view of a "neck pillow" showing our new design;
FIG. **2** is a front view thereof;
FIG. **3** is a rear view thereof;
FIG. **4** is a left side view thereof;
FIG. **5** is a right side view thereof;
FIG. **6** is a top view thereof;
FIG. **7** is a bottom view thereof; and,
FIG. **8** is a perspective view viewed from another visual angle thereof.

1 Claim, 5 Drawing Sheets

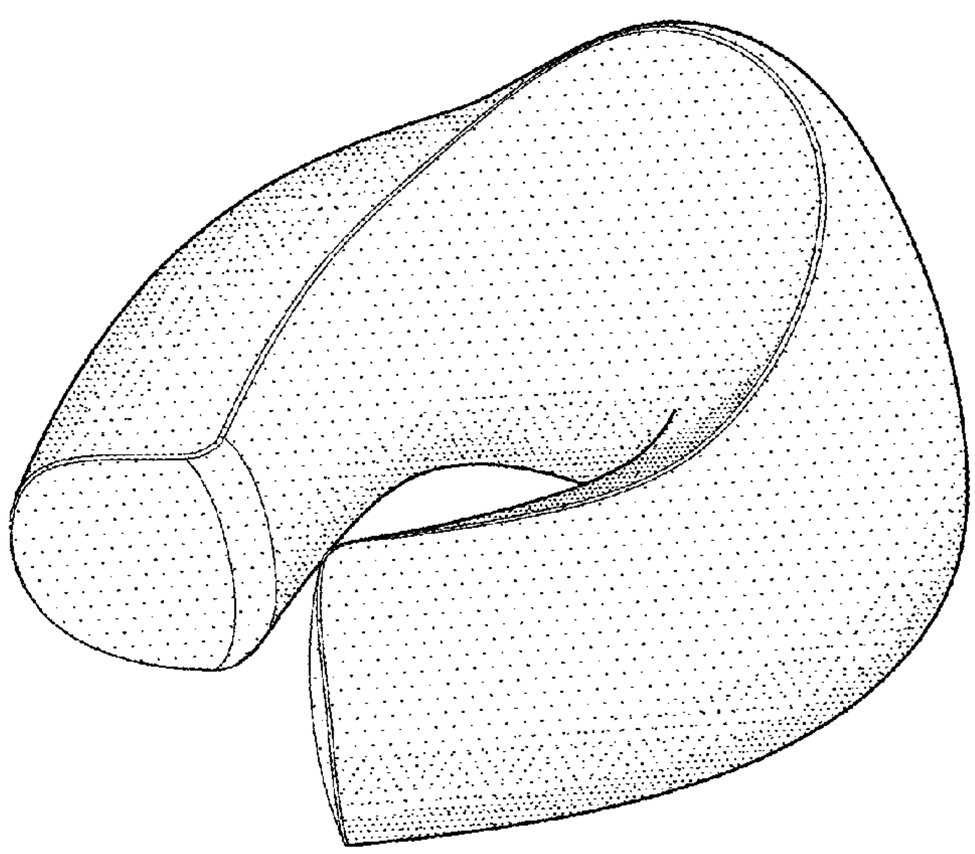

(56) **References Cited**

U.S. PATENT DOCUMENTS

D777,493	S *	1/2017	McNown	D6/601
9,532,657	B2 *	1/2017	Sclare	A47D 13/083
D778,086	S *	2/2017	O'Meara	D6/601
2001/0054837	A1 *	12/2001	O'Connor	A47C 7/383 297/397
2015/0257554	A1 *	9/2015	Ross	A47C 27/086 5/639
2017/0000273	A1 *	1/2017	Mitchell	A47C 7/383

* cited by examiner

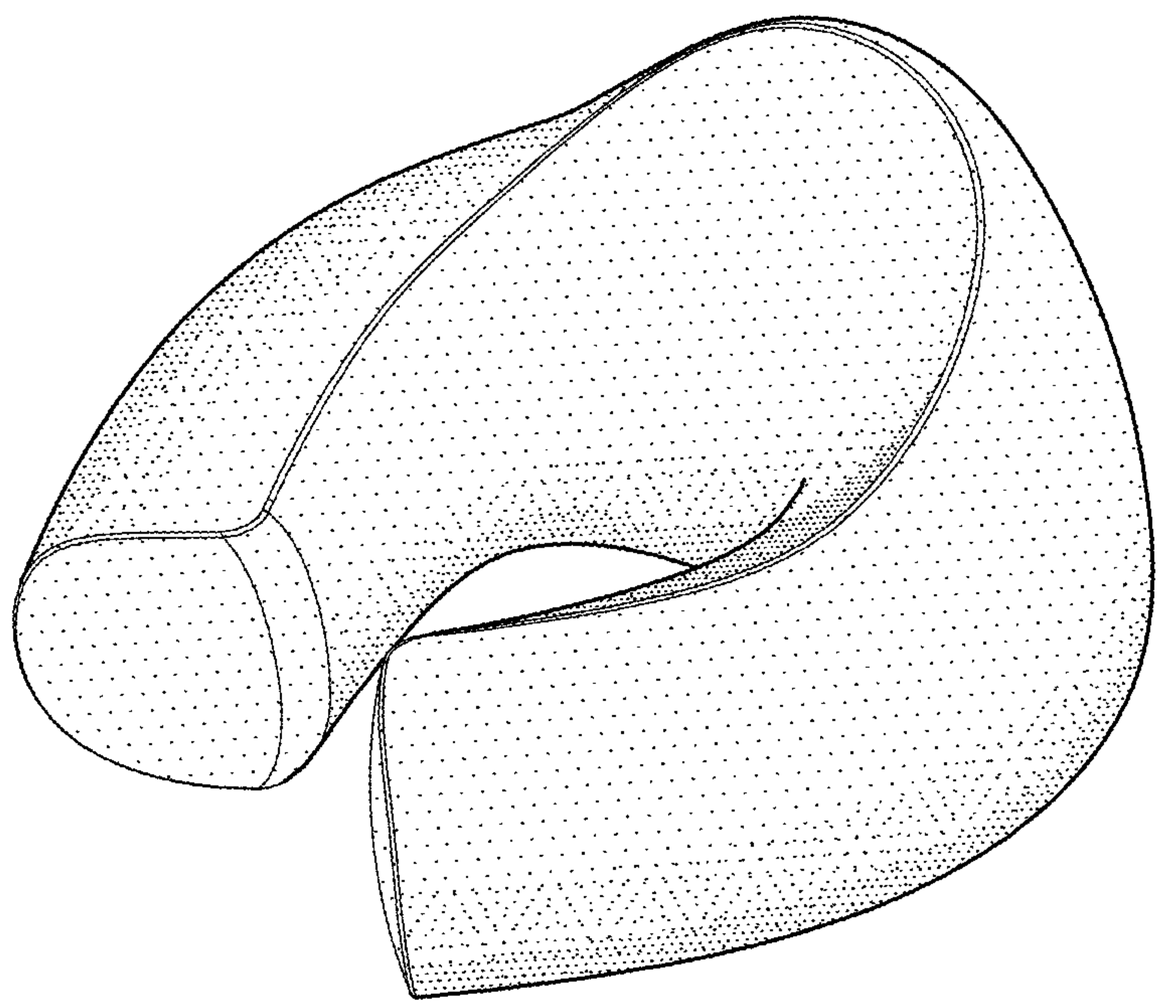

FIG.1

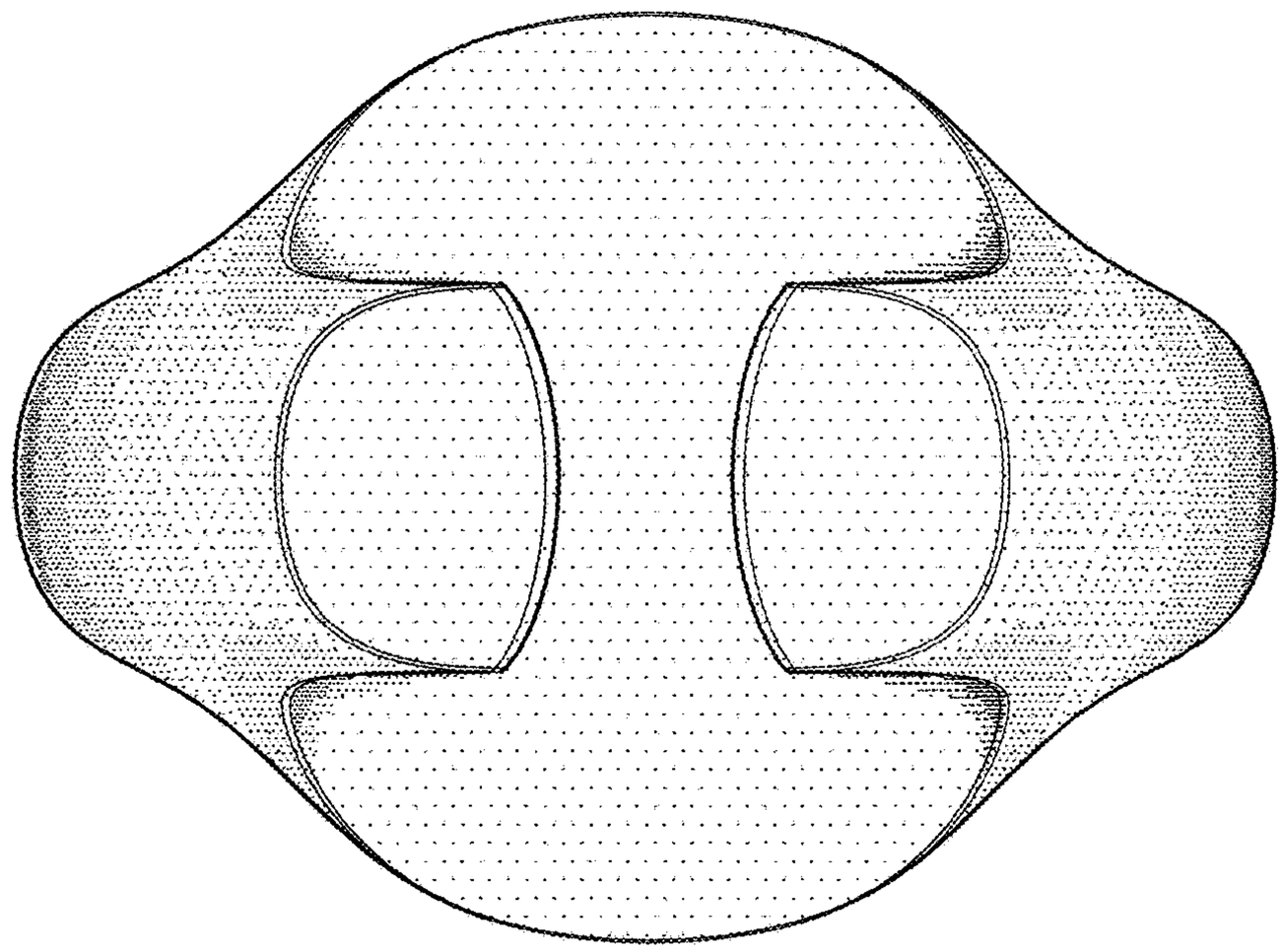

FIG.2

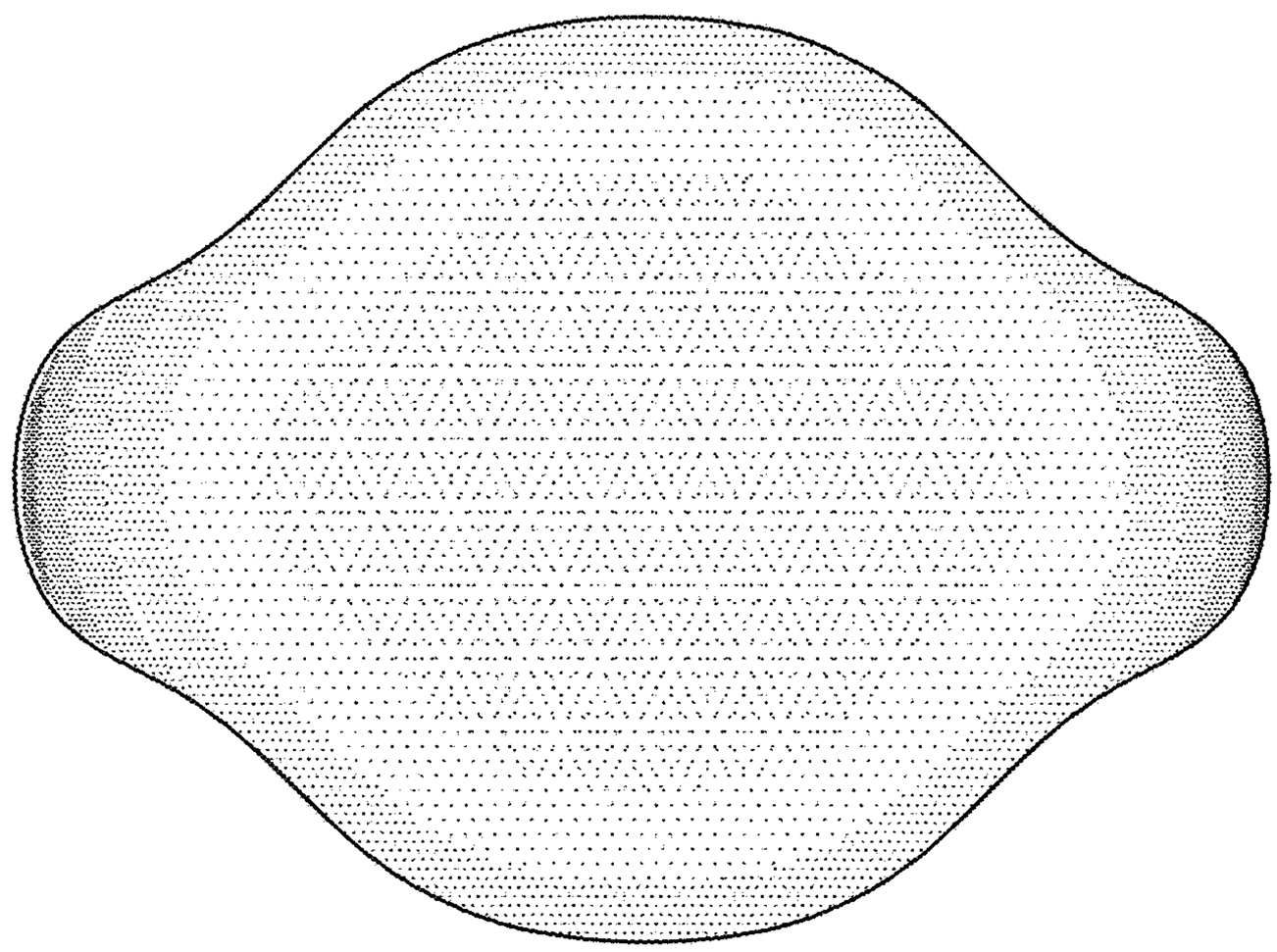

FIG.3

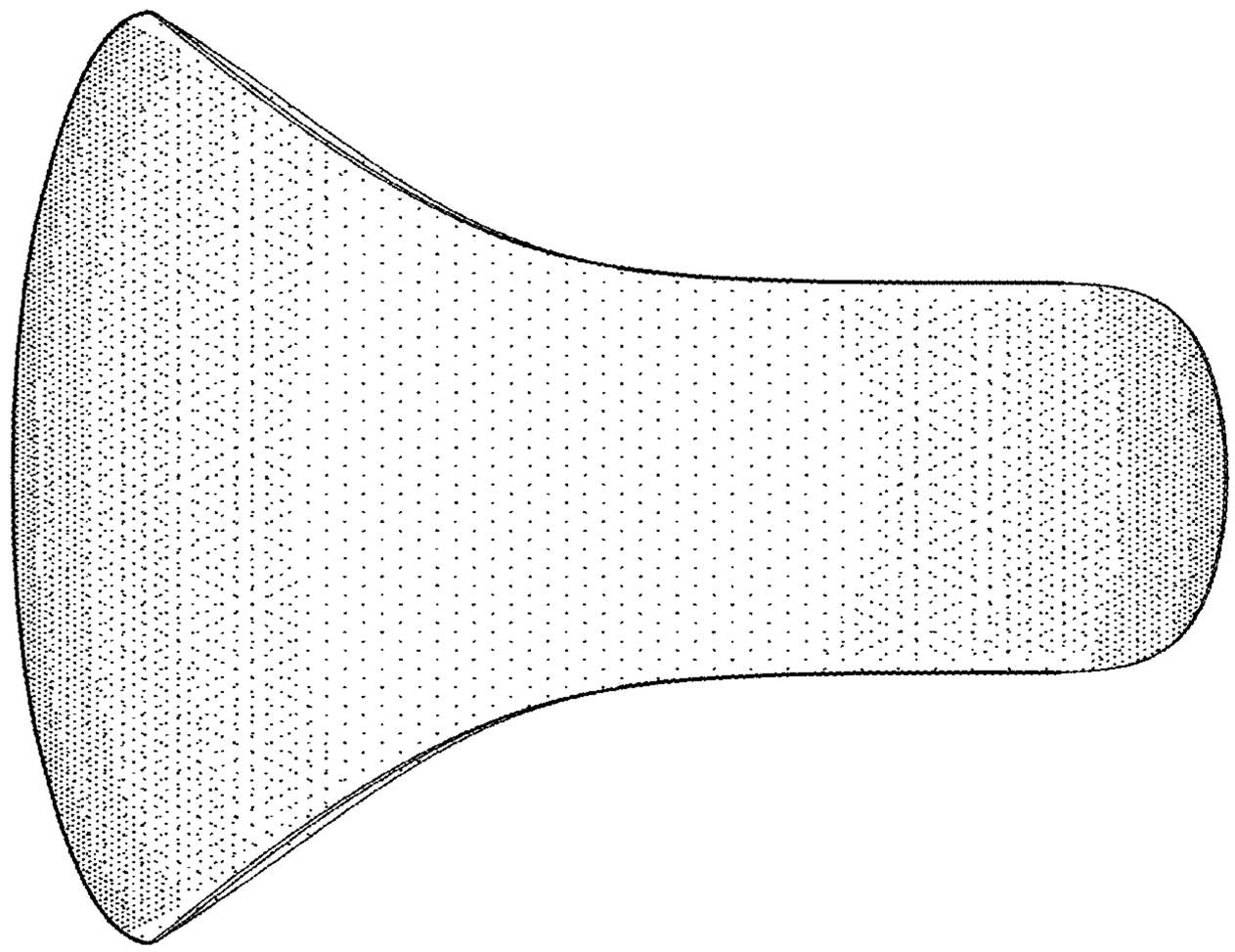

FIG.4

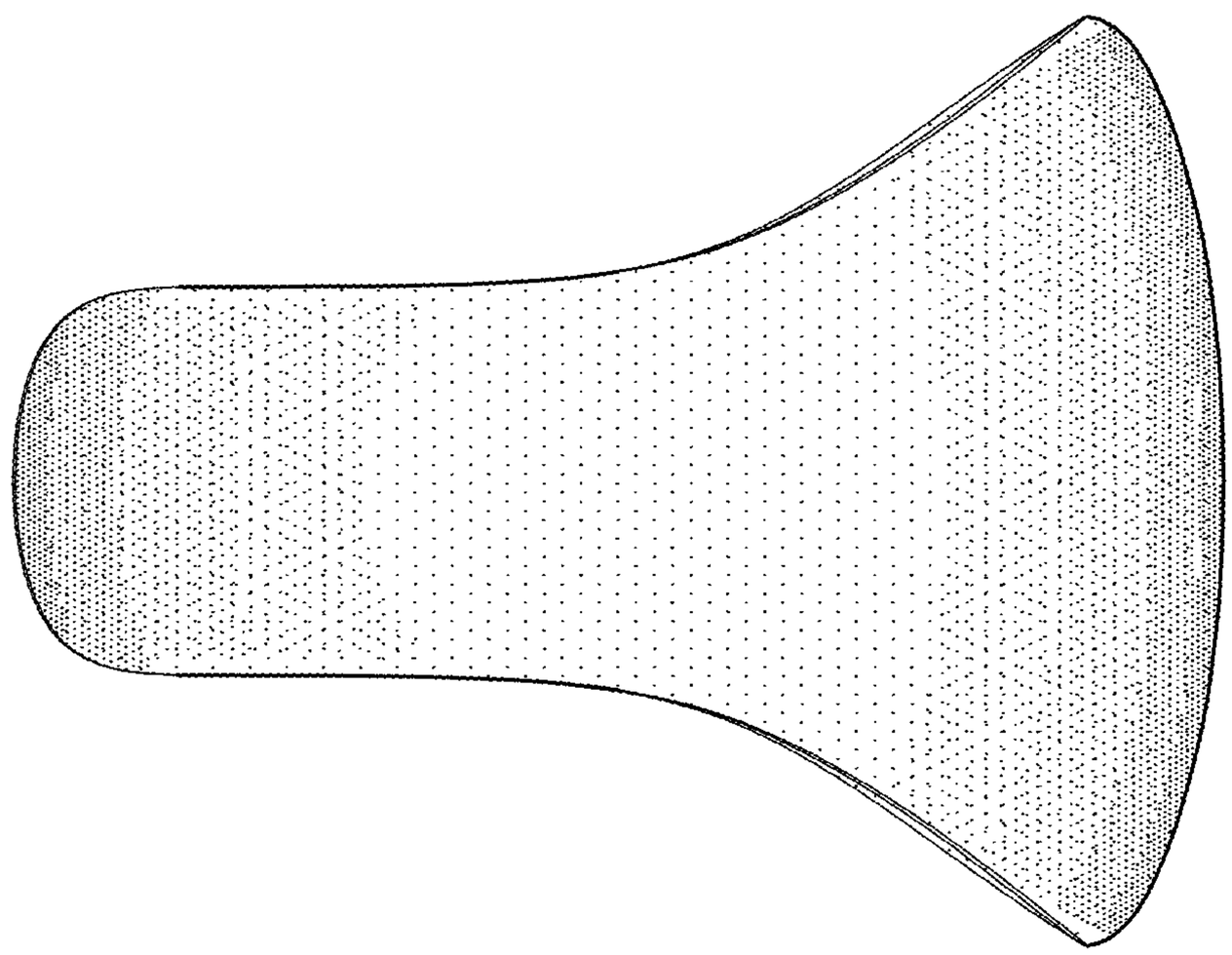

FIG.5

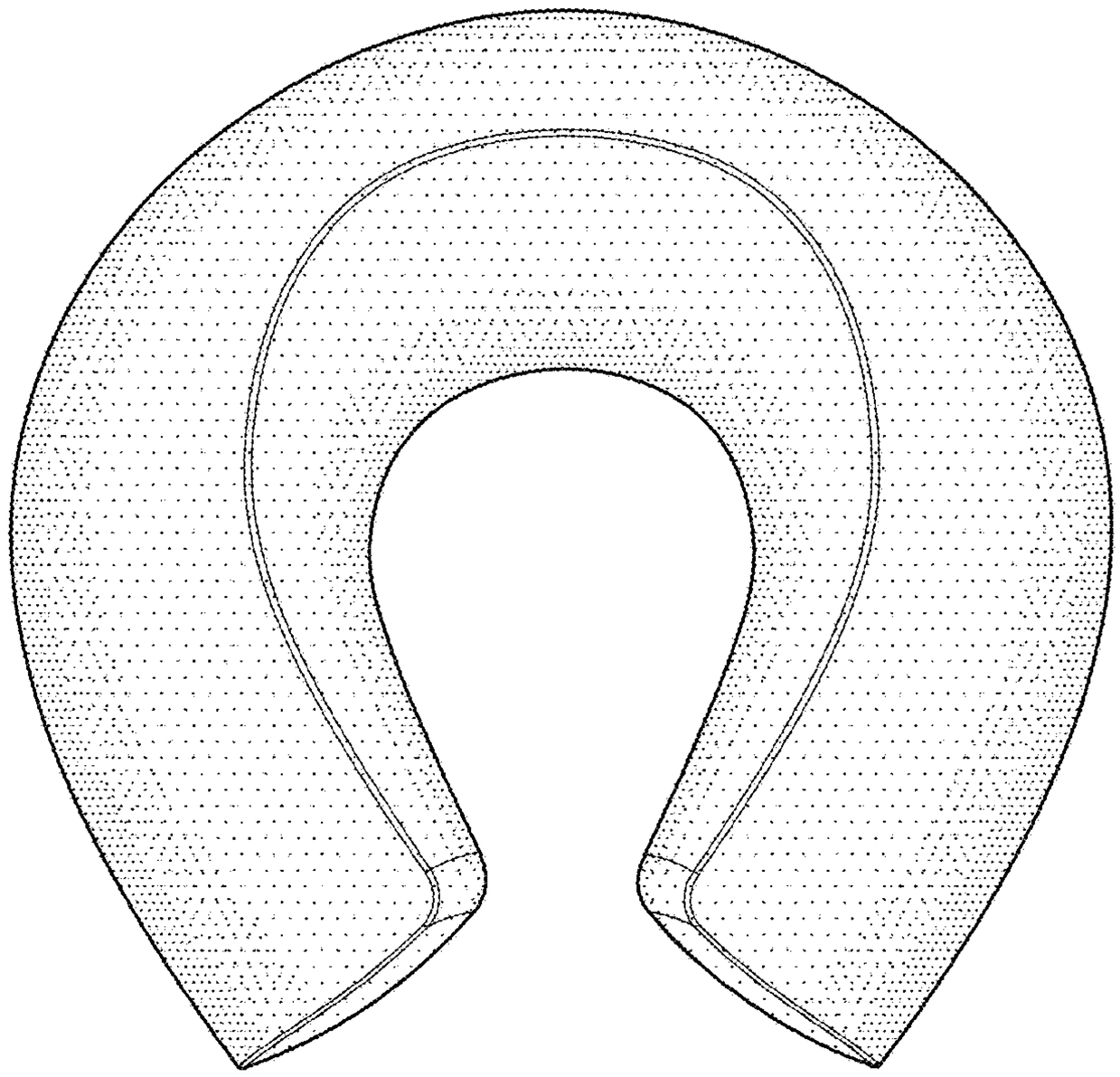

FIG.6

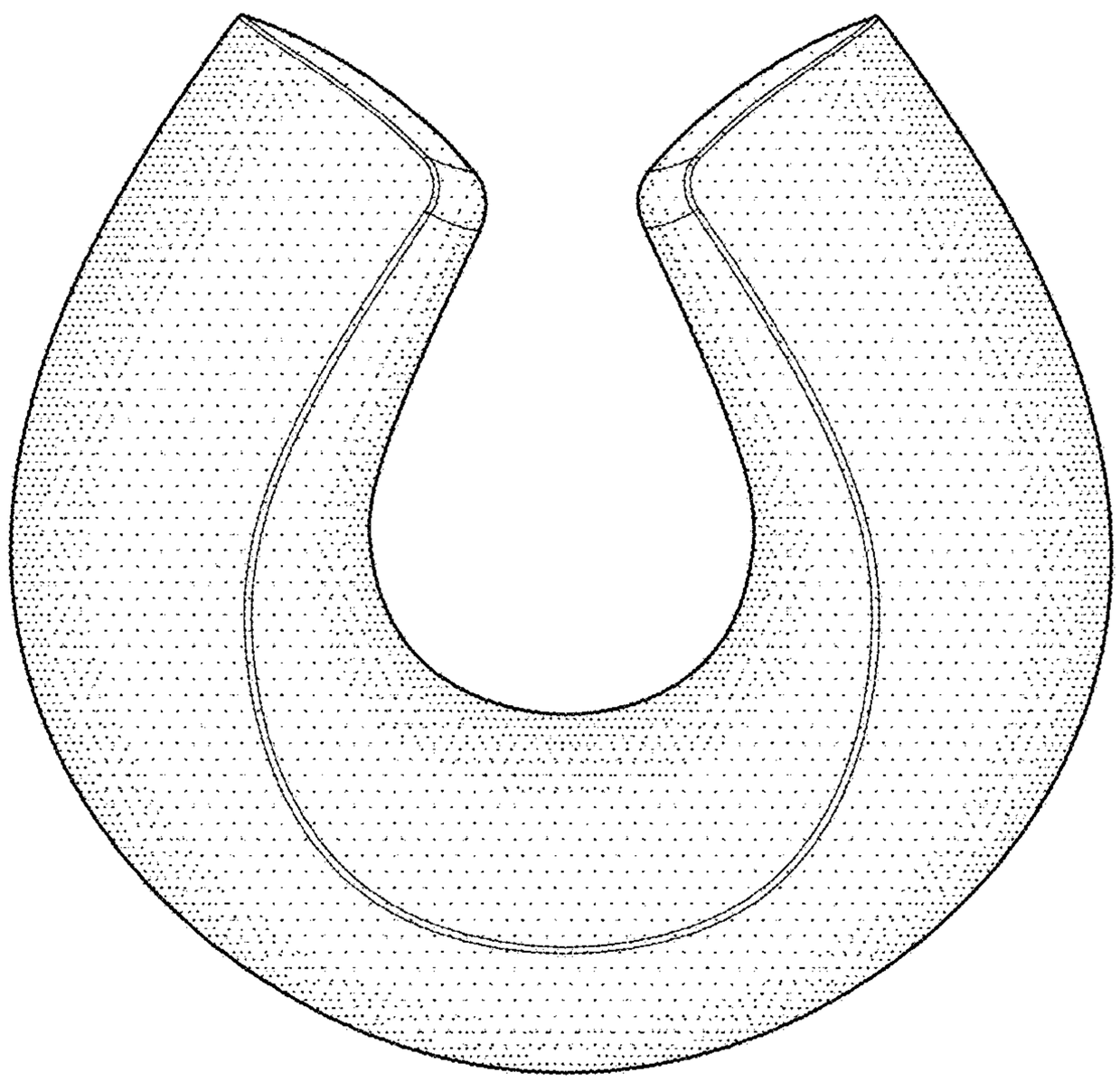

FIG.7

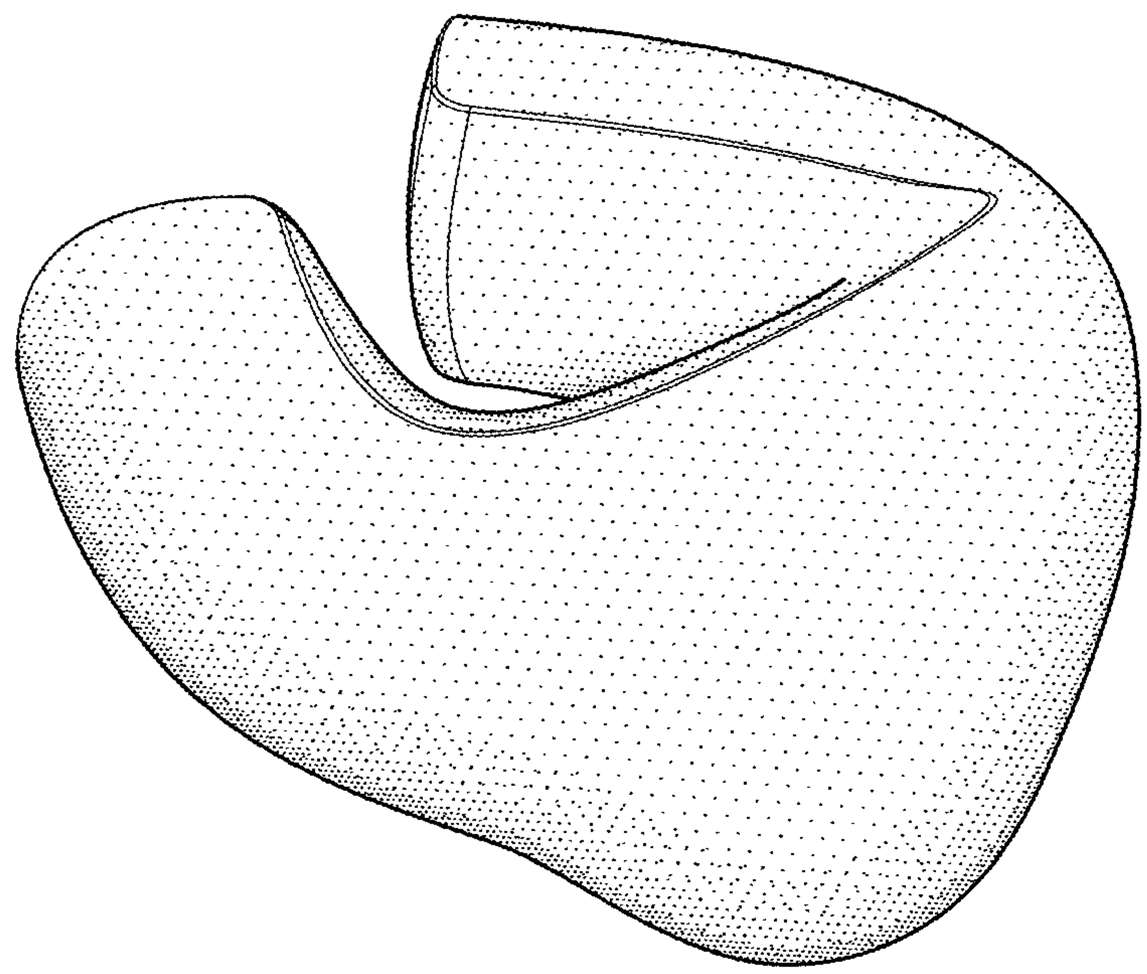

FIG.8