US00D787026S

(12) United States Design Patent
Filer

(10) **Patent No.: US D787,026 S**
(45) **Date of Patent: ** May 16, 2017**

(54) **PLASTIC PIPE INSERTION STOP**

(71) Applicant: **S & B Technical Products, Inc.**, Fort Worth, TX (US)

(72) Inventor: **John T. Filer**, Colorado City, CO (US)

(73) Assignee: **S & B Technical Products, Inc.**, Fort Worth, TX (US)

(**) Term: **15 Years**

(21) Appl. No.: **29/565,449**

(22) Filed: **May 20, 2016**

(51) **LOC (10) Cl.** **23-01**

(52) **U.S. Cl.**
USPC **D23/262**; D23/269

(58) **Field of Classification Search**
USPC D23/259–265, 268–269, 233, 249; 277/351–354, 372, 504, 603, 616, 397, 277/523, 620; 285/86–92, 133.21, 232, 285/351, 910, 918; 292/308
CPC F16L 17/025; F16L 21/022; F16L 5/02; F16L 5/08; F16L 5/10; F16J 15/125
See application file for complete search history.

(56) **References Cited**

U.S. PATENT DOCUMENTS

D360,018 S * 7/1995 Sonden D23/262
D386,246 S * 11/1997 Sonden D23/262
D456,071 S * 4/2002 Mattsson D23/393
6,709,021 B2 * 3/2004 Duncan F16L 33/04 285/109
D534,253 S * 12/2006 Sandman D23/269
D558,310 S * 12/2007 Quesada D23/269
D559,095 S * 1/2008 Lalancette D8/396
D574,472 S * 8/2008 Kanao D23/262
7,523,964 B2 * 4/2009 Sandman F16L 17/025 277/616
D607,091 S * 12/2009 Weston D23/269
D614,271 S * 4/2010 Weston D23/269
D615,857 S * 5/2010 Chandler D23/265
D616,072 S * 5/2010 Henry D23/262
(Continued)

OTHER PUBLICATIONS

EBBA Iron, Inc., "Mega-Stop ®, Series 5000, Bell Protection System", Product Brochure, 4 pages, © 2013, www.ebaa.com.

Primary Examiner — Eric Goodman
Assistant Examiner — Amy Wierenga
(74) *Attorney, Agent, or Firm* — Whitaker Chalk Swindle & Schwartz PLLC; Charles Gunter

(57) **CLAIM**

The ornamental design for a plastic pipe insertion stop, as shown and described.

DESCRIPTION

FIG. **1** is a perspective view of the plastic pipe insertion stop of the invention;
FIG. **2** is a left side view of the plastic pipe insertion stop of FIG. **1**;
FIG. **3** is a right side view of the plastic pipe insertion stop of FIG. **1**;
FIG. **4** is a top view of the plastic pipe insertion stop of FIG. **1**;
FIG. **5** is a bottom view of the plastic pipe insertion stop of FIG. **1**;
FIG. **6** is another side view of the plastic pipe insertion stop of the invention shown rotated 90° from the view shown in FIG. **2**;
FIG. **7** is another side view of the plastic pipe insertion stop shown rotated 180° from the view shown in FIG. **6**; and
FIG. **8** is a perspective view of the article shown in a position of use; and,
FIG. **9** is another perspective view of the article shown in a position of use.
The broken lines shown in FIGS. **8** and **9** depict environment only that form no part of the claim.

1 Claim, 7 Drawing Sheets

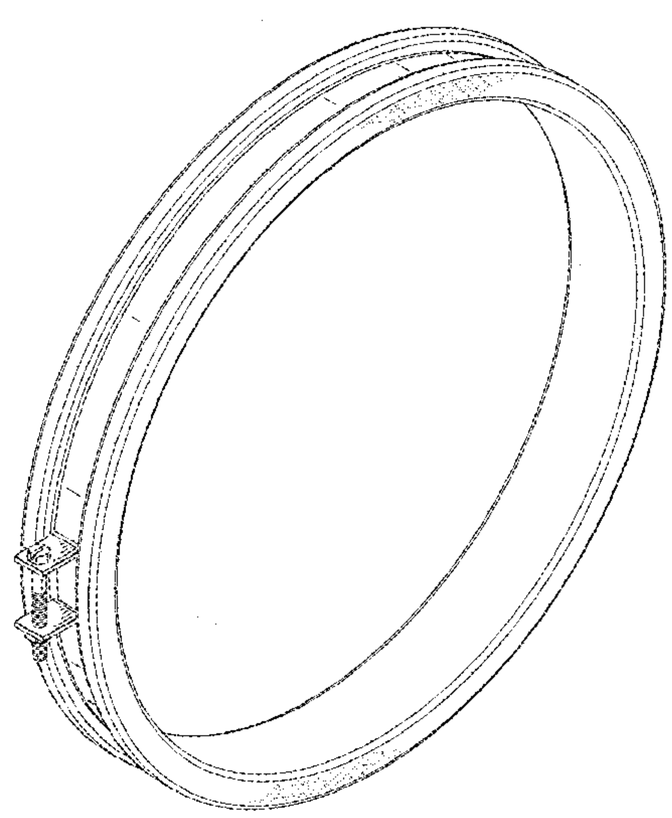

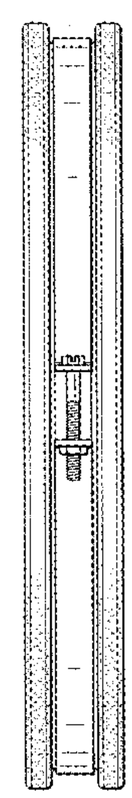

(56) **References Cited**

U.S. PATENT DOCUMENTS

D625,783	S	*	10/2010	Madara	D23/262
D715,412	S	*	10/2014	Sgherri	D23/259
2003/0227179	A1	*	12/2003	Mardis	G01R 11/24 292/308
2008/0001401	A1		1/2008	Quesada et al.	
2008/0018017	A1		1/2008	Quesada et al.	

* cited by examiner

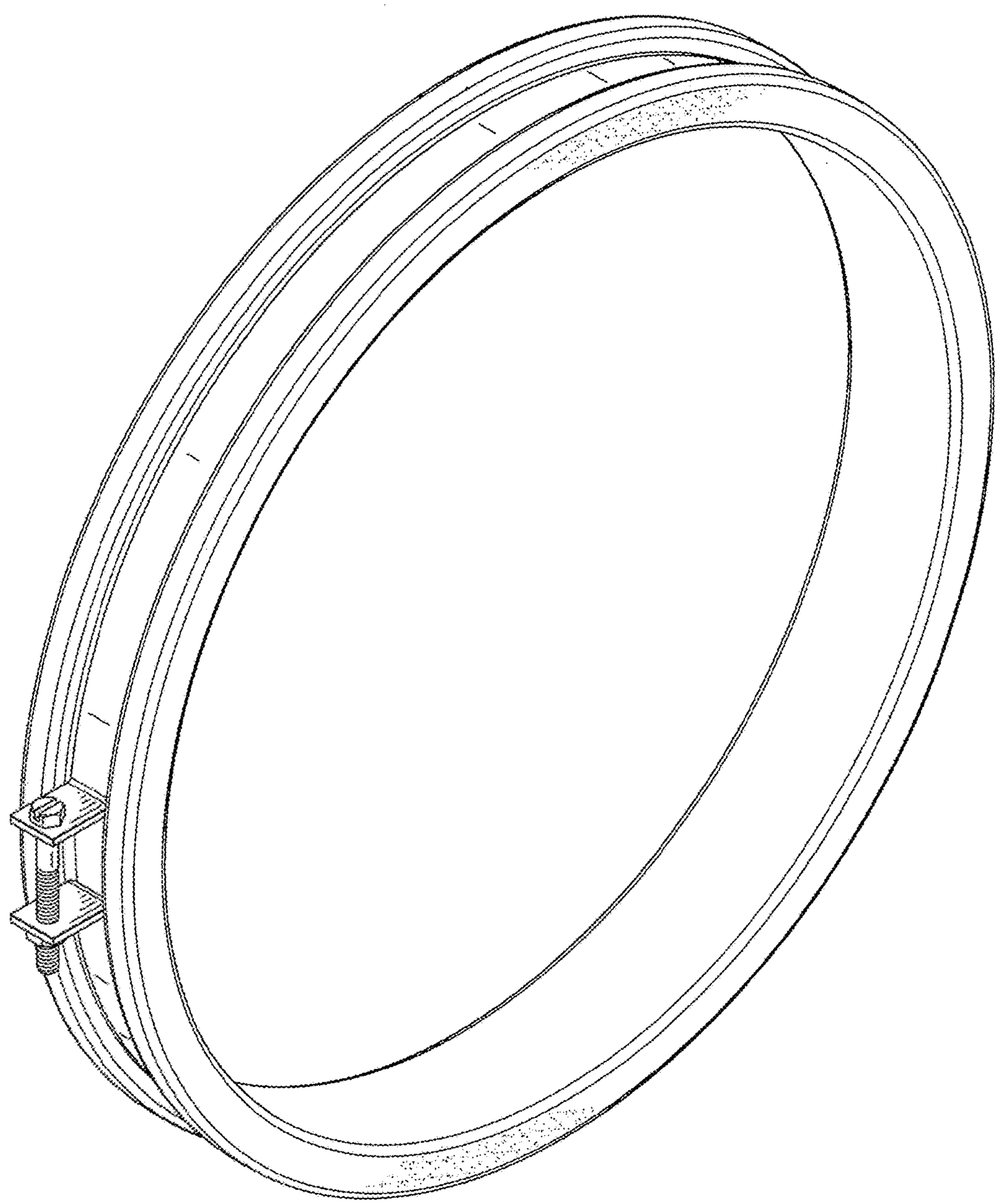

FIG. 1

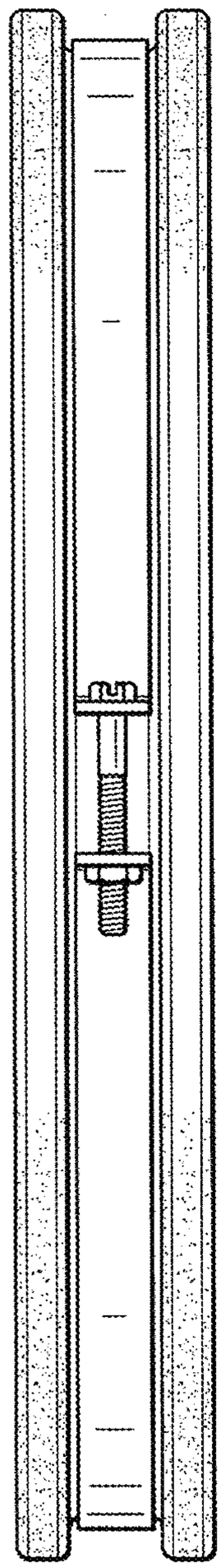

FIG. 2

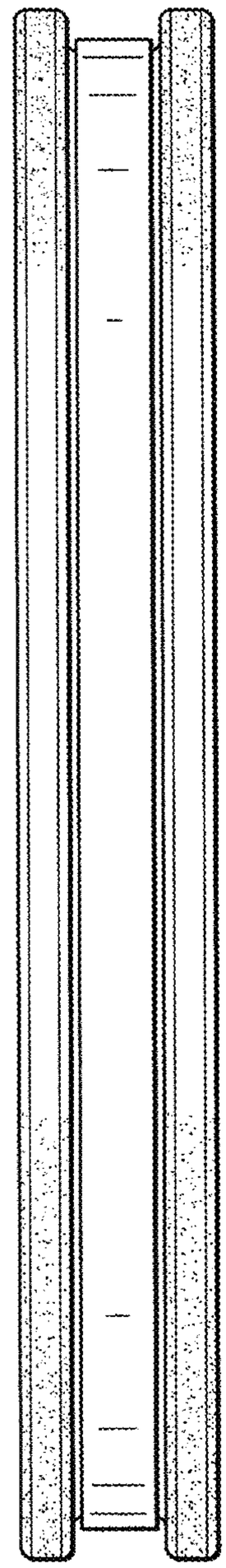

FIG. 3

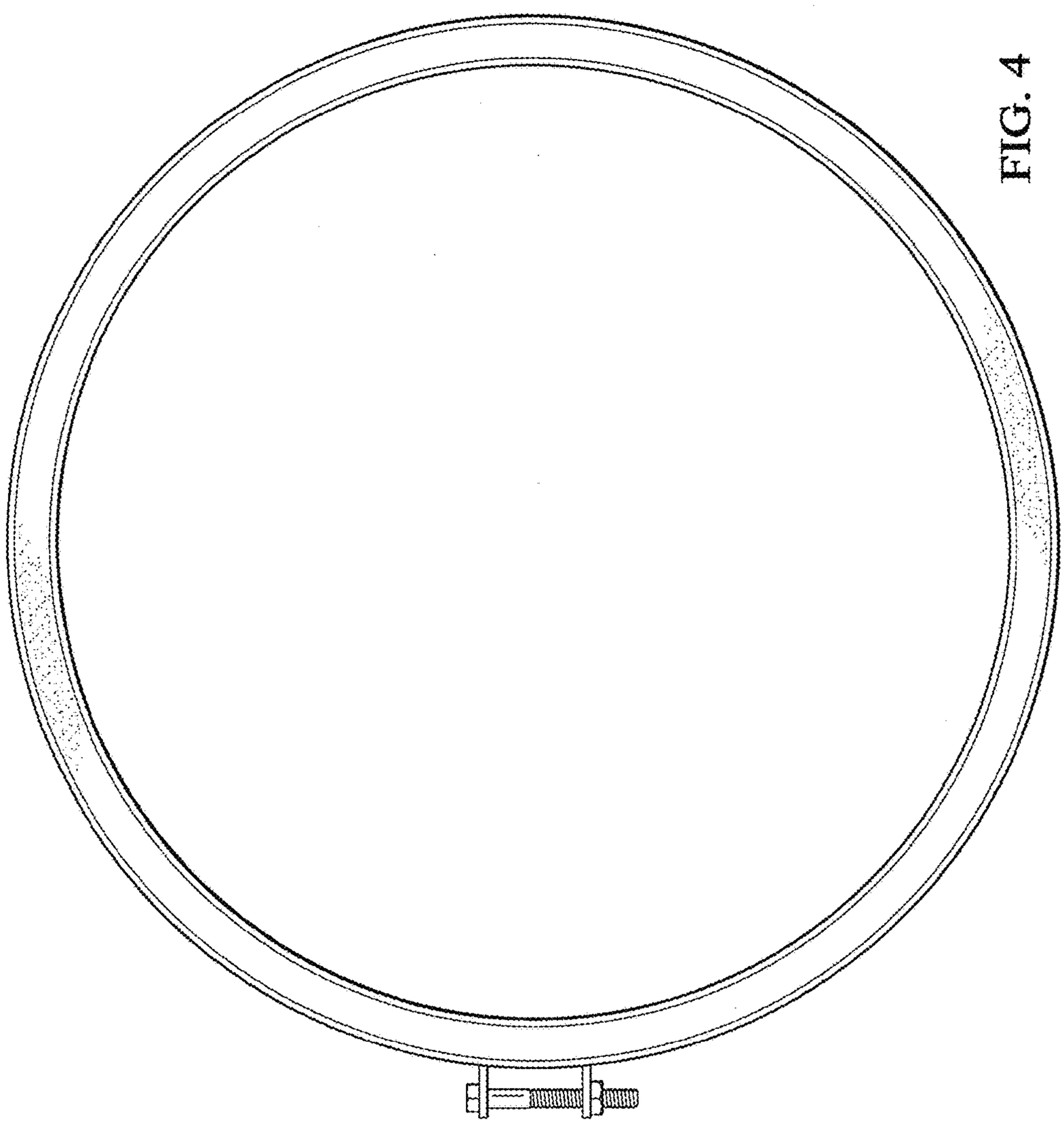

FIG. 4

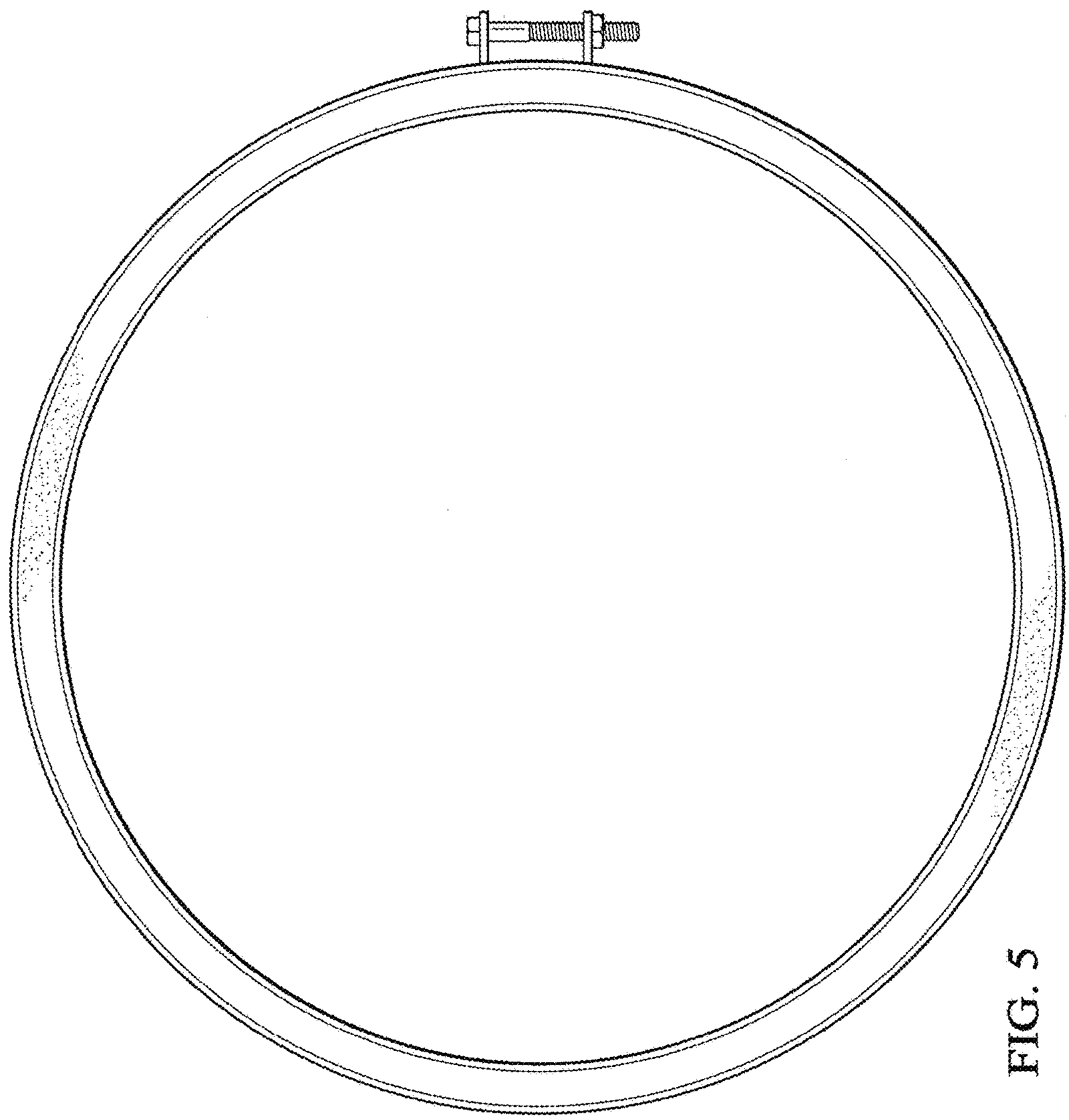

FIG. 5

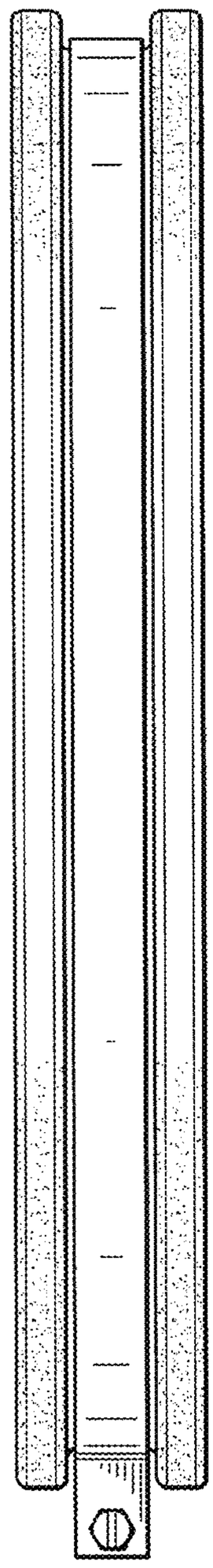

FIG. 6

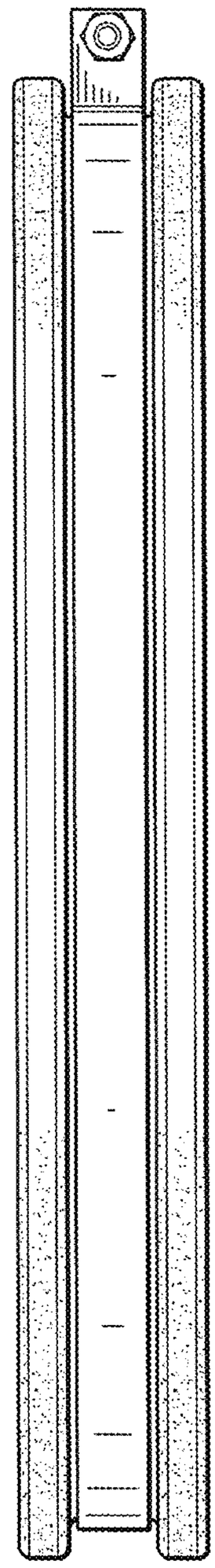

FIG. 7

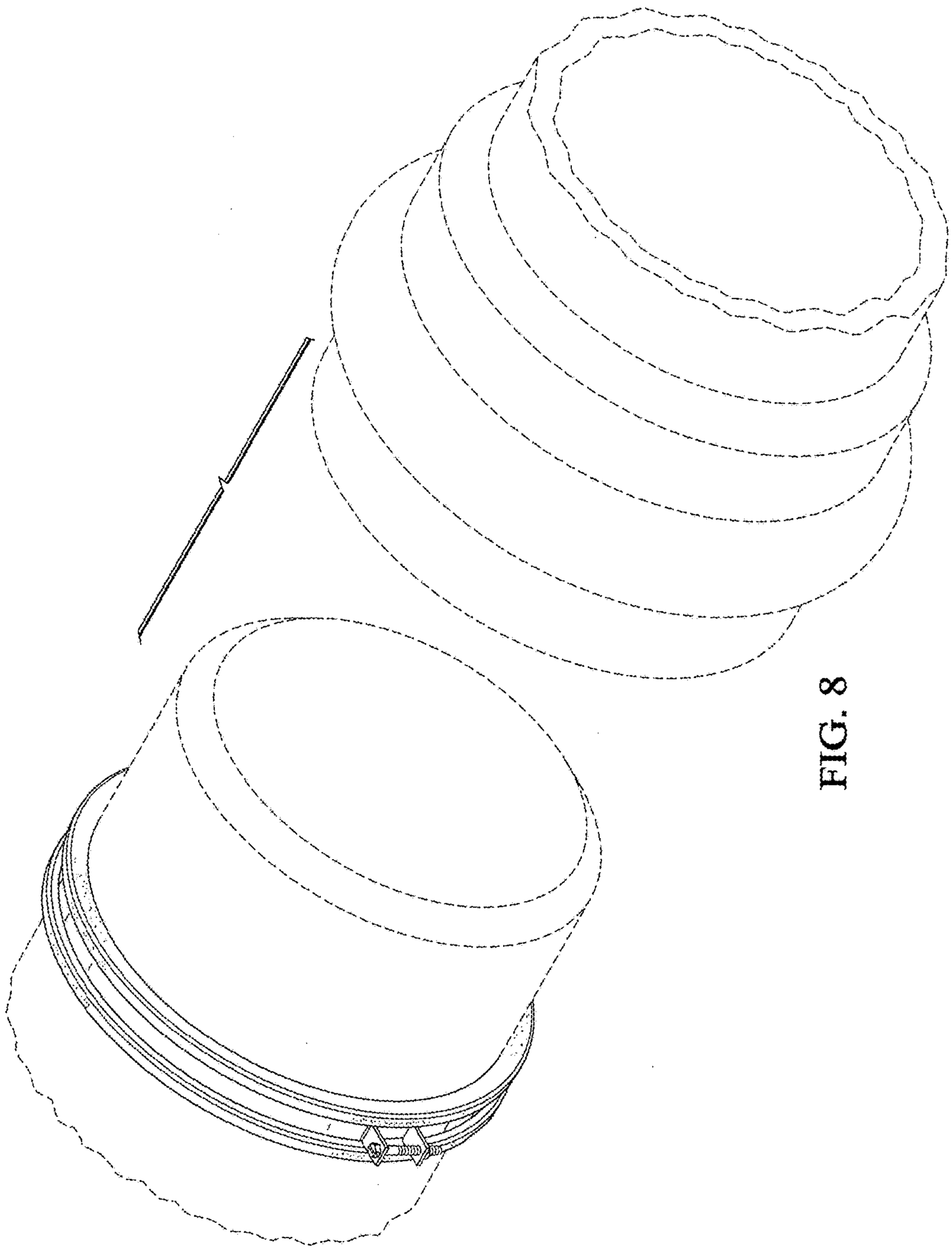

FIG. 8

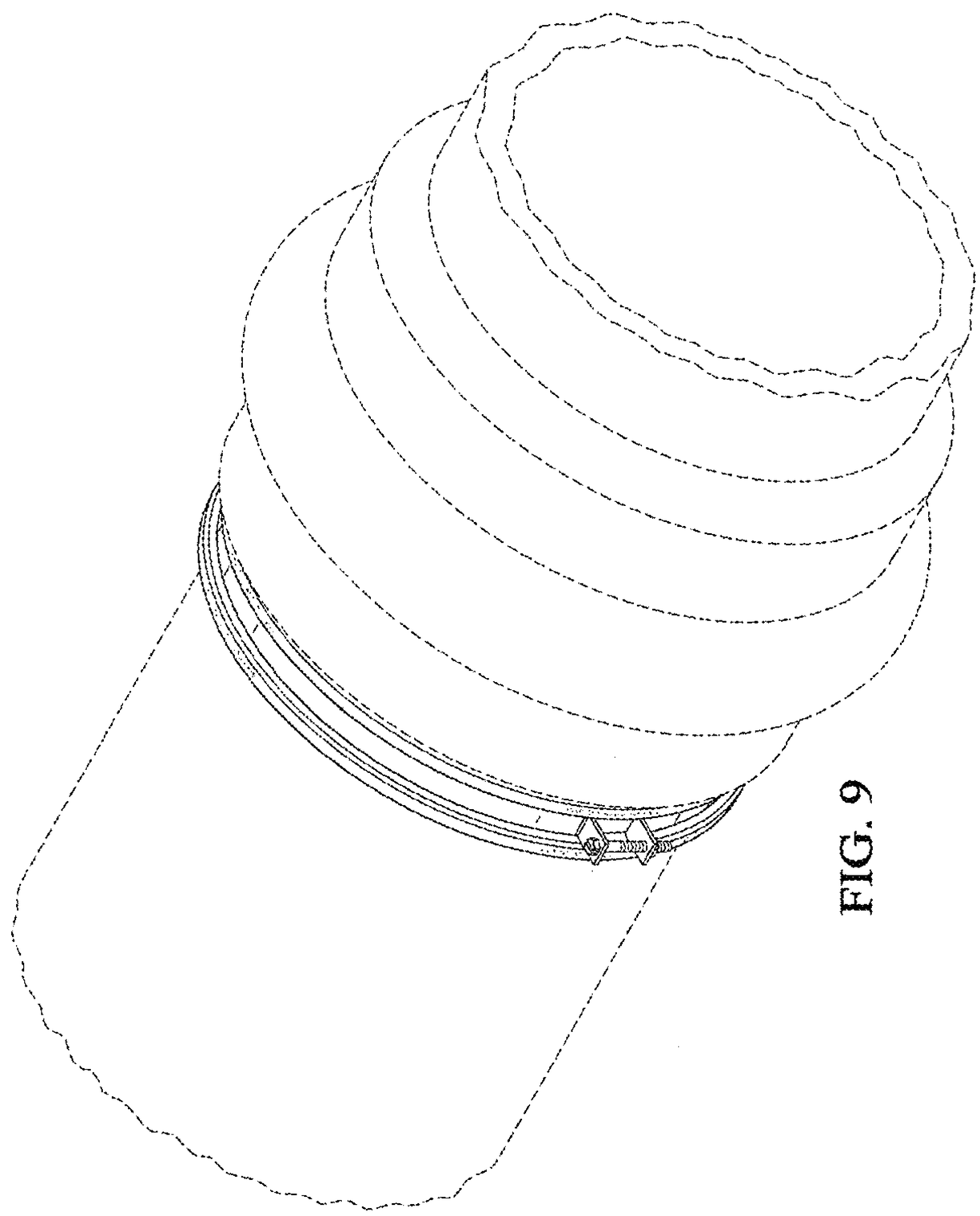

FIG. 9