US00D786943S

(12) United States Design Patent

Gardner

(10) Patent No.: US D786,943 S
(45) Date of Patent: ** May 16, 2017

(54) **DUAL HAY SPEAR**

(71) Applicant: **James Gardner**, Wagoner, OK (US)

(72) Inventor: **James Gardner**, Wagoner, OK (US)

(**) Term: **15 Years**

(21) Appl. No.: **29/563,185**

(22) Filed: **May 3, 2016**

(51) **LOC (10) Cl.** **15-03**

(52) **U.S. Cl.**
USPC **D15/27**; D15/28

(58) **Field of Classification Search**
USPC D15/10, 28, 32; 414/24.5, 703, 722, 911, 414/920, 724, 912, 721, 685; 294/61
CPC A01D 87/122; A01D 87/12; A01D 87/127; A01D 87/00; A01D 90/00; B66F 9/12; B66F 9/065; B66C 1/00; Y10S 414/133; B60P 1/44
See application file for complete search history.

(56) **References Cited**

U.S. PATENT DOCUMENTS

2,727,640 A * 12/1955 McClenny A01D 76/006 414/703
4,032,184 A * 6/1977 Blair A01D 87/127 294/119.1

(Continued)

OTHER PUBLICATIONS

Internet Printout; Skidsteer Dual Hay Spear bale spike skid steer case kubota 3,000 capacity; http://www.rakuten.com/prod/276793693.html; US.

(Continued)

Primary Examiner — Mark Goodwin

(74) *Attorney, Agent, or Firm* — Dennis D. Brown; Brown Patent Law, P.L.L.C.

(57) **CLAIM**

The ornamental design of the dual hay spear, as shown and described.

DESCRIPTION

FIG. **1** is a top perspective view illustrating my new design having dual hay spear elements thereof in a lowered position.
FIG. **2** is a front elevational view of my new design with the dual hay spear elements thereof in the lowered position.
FIG. **3** is a rear elevational view of my new design with the dual hay spear elements thereof in the lowered position.
FIG. **4** is a left side elevational view of my new design with the dual hay spear elements thereof in the lowered position.
FIG. **5** is a right side elevational view of my new design with the dual hay spear elements thereof in the lowered position.
FIG. **6** is a top plan view of my new design with the dual hay spear elements thereof in the lowered position.
FIG. **7** is a bottom view of my new design with the dual hay spear elements thereof in the lowered position.
FIG. **8** is a top perspective view of my new design with the dual hay spear elements thereof in a raised position.
FIG. **9** is a front elevational view of my new design with the dual hay spear elements thereof in the raised position.
FIG. **10** is a rear elevational view of my new design with the dual hay spear elements thereof in the raised position.
FIG. **11** is a left side elevational view of my new design with the dual hay spear elements thereof in the raised position.
FIG. **12** is a right side elevational view of my new design with the dual hay spear elements thereof in the raised position.
FIG. **13** is a top plan view of my new design with the dual hay spear elements thereof in the raised position; and,
FIG. **14** is a bottom view of my new design with the dual hay spear elements thereof in the raised position.

1 Claim, 12 Drawing Sheets

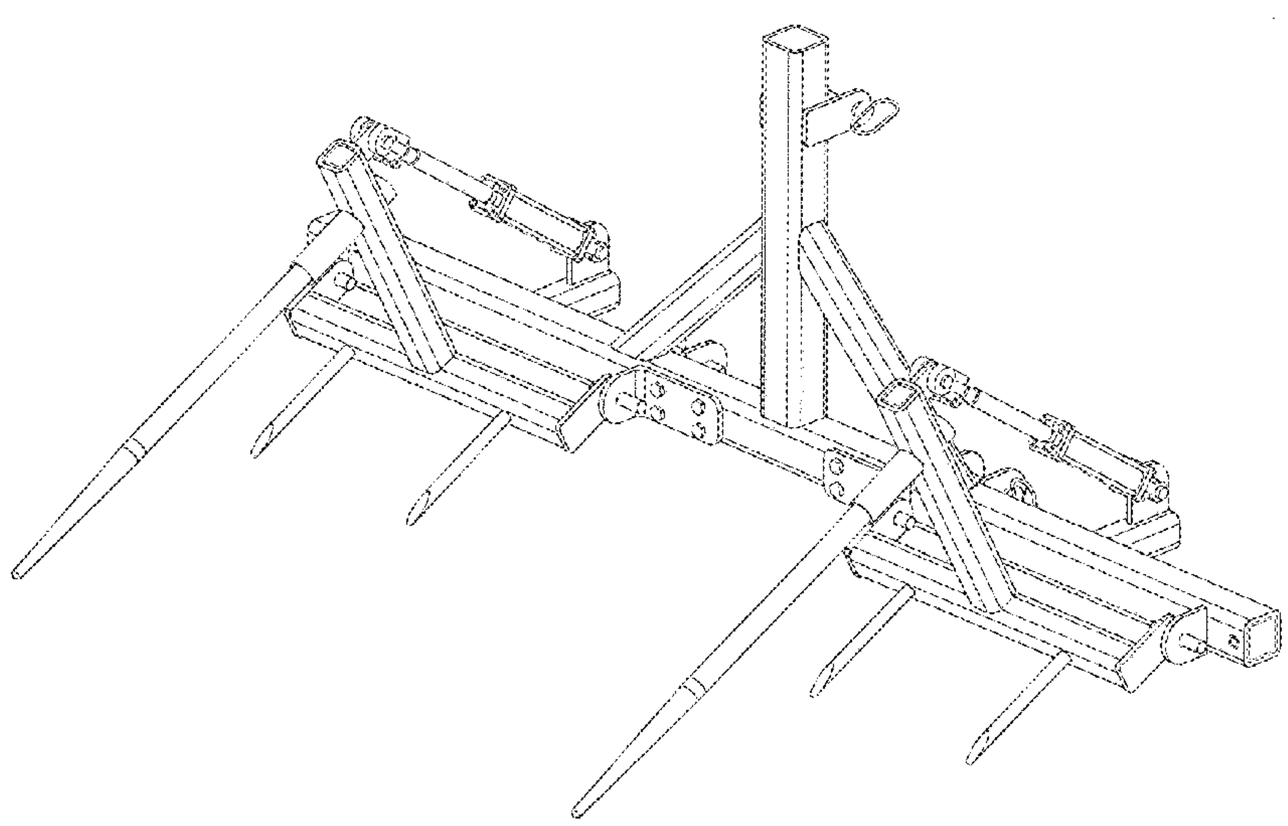

(56) **References Cited**

U.S. PATENT DOCUMENTS

4,044,963	A *	8/1977	Hostetler	A01D 87/127 242/391.1
4,299,522	A	11/1981	Barton et al.	
4,306,825	A	12/1981	Yilit	
4,411,571	A	10/1983	Gildon	
4,412,768	A	11/1983	Bauer et al.	
4,537,549	A *	8/1985	Knels	A01D 87/08 414/24.5
5,106,253	A	4/1992	Wedin	
5,129,775	A *	7/1992	Coats	A01D 87/127 294/120
5,150,999	A	9/1992	Dugan	
7,182,568	B2 *	2/2007	McGinnes	A01D 87/127 414/24.5
7,753,636	B2	7/2010	Hennig	
7,963,734	B2 *	6/2011	Bruha	A01D 87/122 414/24.5
8,444,362	B2 *	5/2013	Hennig	A01D 87/127 414/24.5
D700,918	S *	3/2014	Small	A01D 87/122 D15/28
8,764,369	B2	7/2014	Bowne	
9,210,843	B1	12/2015	Collom	
9,232,695	B1 *	1/2016	Hennig	A01D 87/127
D749,648	S *	2/2016	Jones, Sr.	D15/28
2003/0123956	A1 *	7/2003	Noualy	A01D 87/127 414/24.5
2005/0074311	A1 *	4/2005	Byrd	A01D 87/127 414/24.5
2010/0040436	A1 *	2/2010	Bruha	A01D 87/122 414/24.5
2013/0236271	A1 *	9/2013	Lehmann	A01D 87/127 414/24.5
2014/0212244	A1	7/2014	Meyer	
2016/0198633	A1 *	7/2016	Machado	A01D 87/127 414/24.5

OTHER PUBLICATIONS

Internet Printout; Bucket Spear; http://www.swdistributing.com/product.aspx?id=1117; 2015; US.

Internet Printout; Titan Attachments John Deere Hay Spear Attachment bale spike tractor loader 200 300 400 500 series; Titan Distributors; http://www.sears.com/titan-attachments-john-deere-hay-spear-attachment-bale/p-SPM8068936529?prdNo=8&blockNo=8&blockType=G8; US.

* cited by examiner

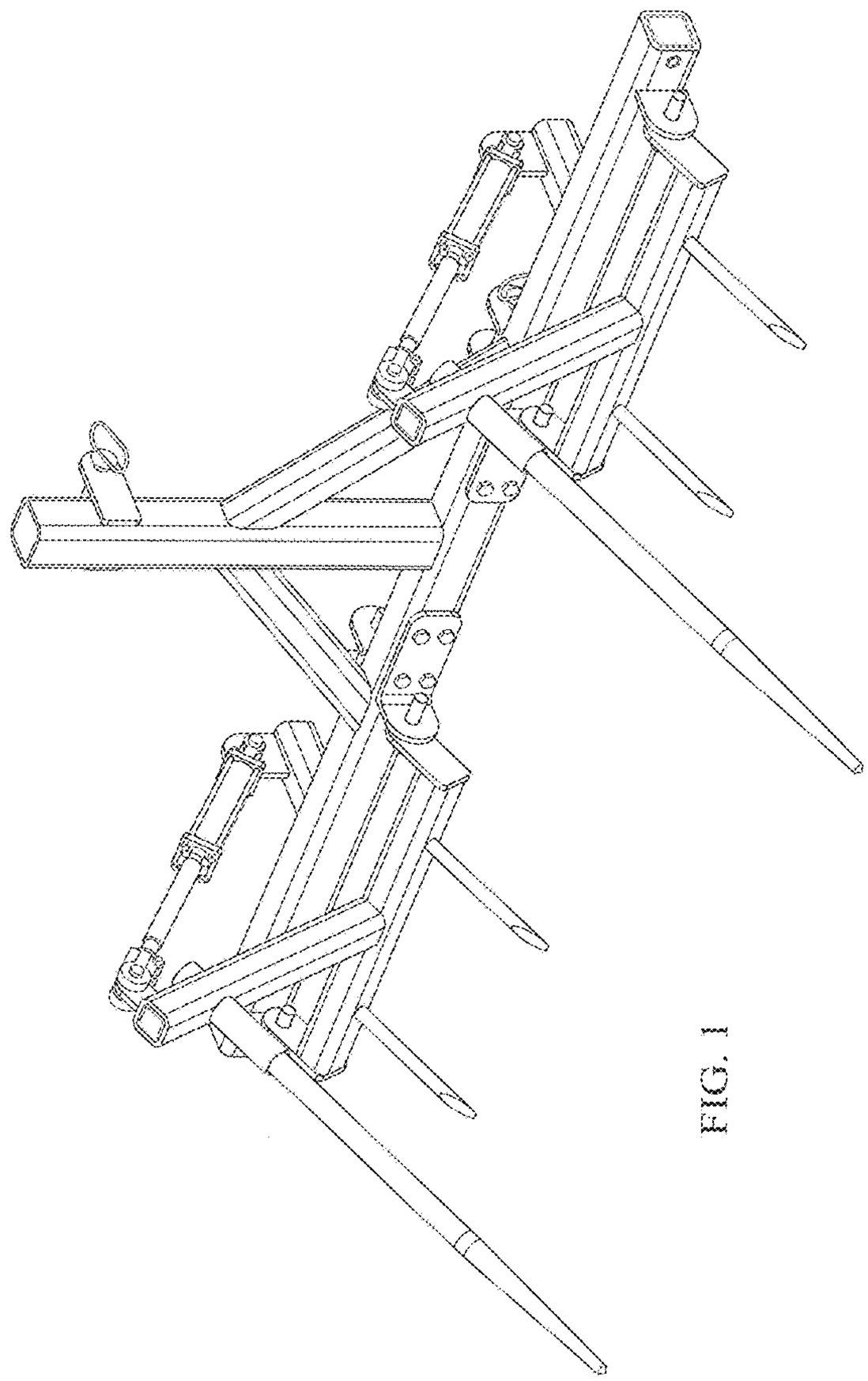

FIG. 1

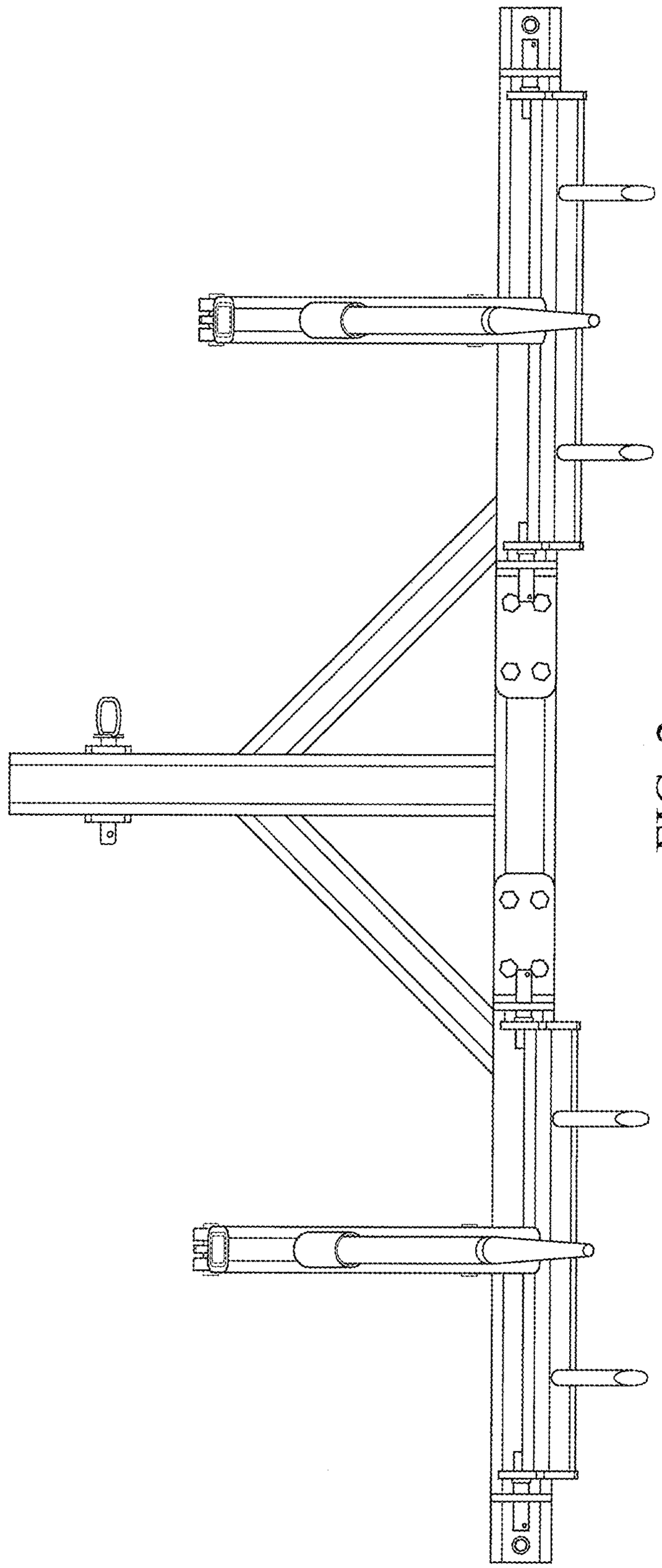

FIG. 2

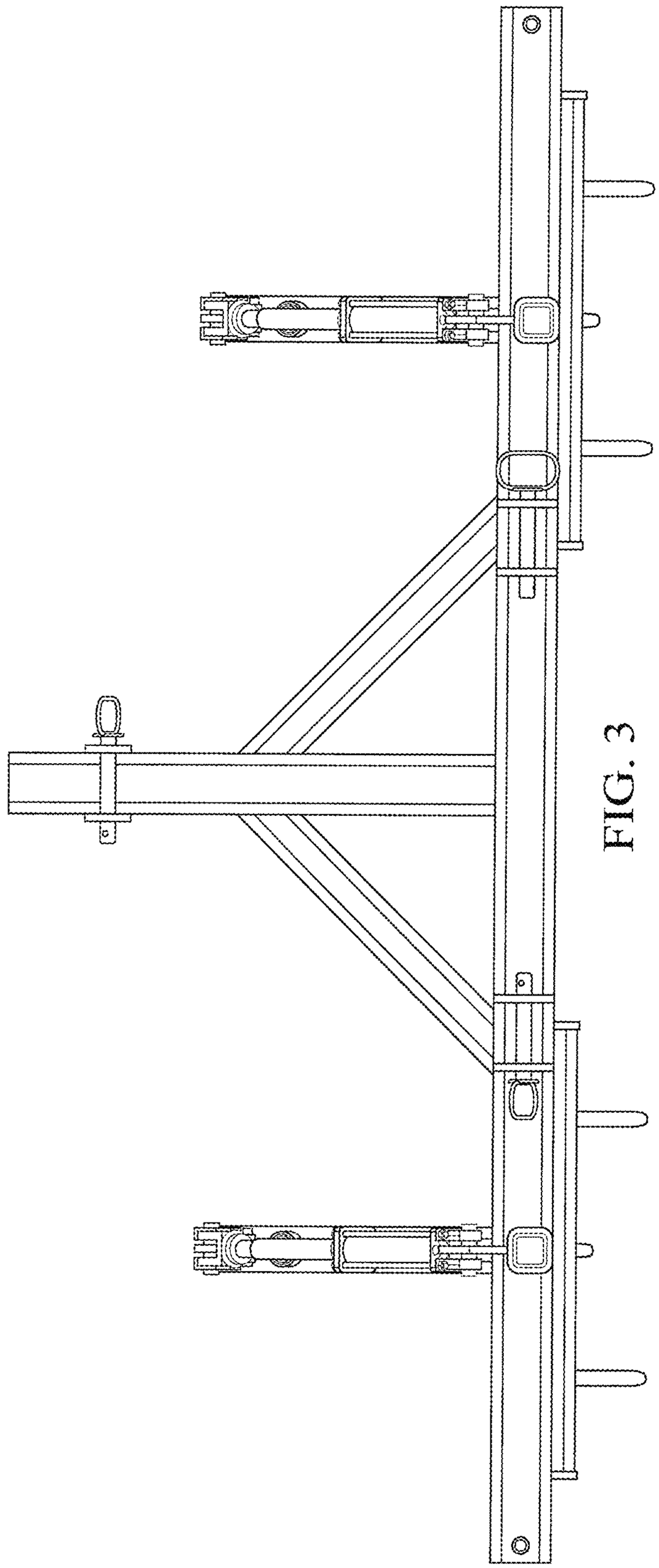

FIG. 3

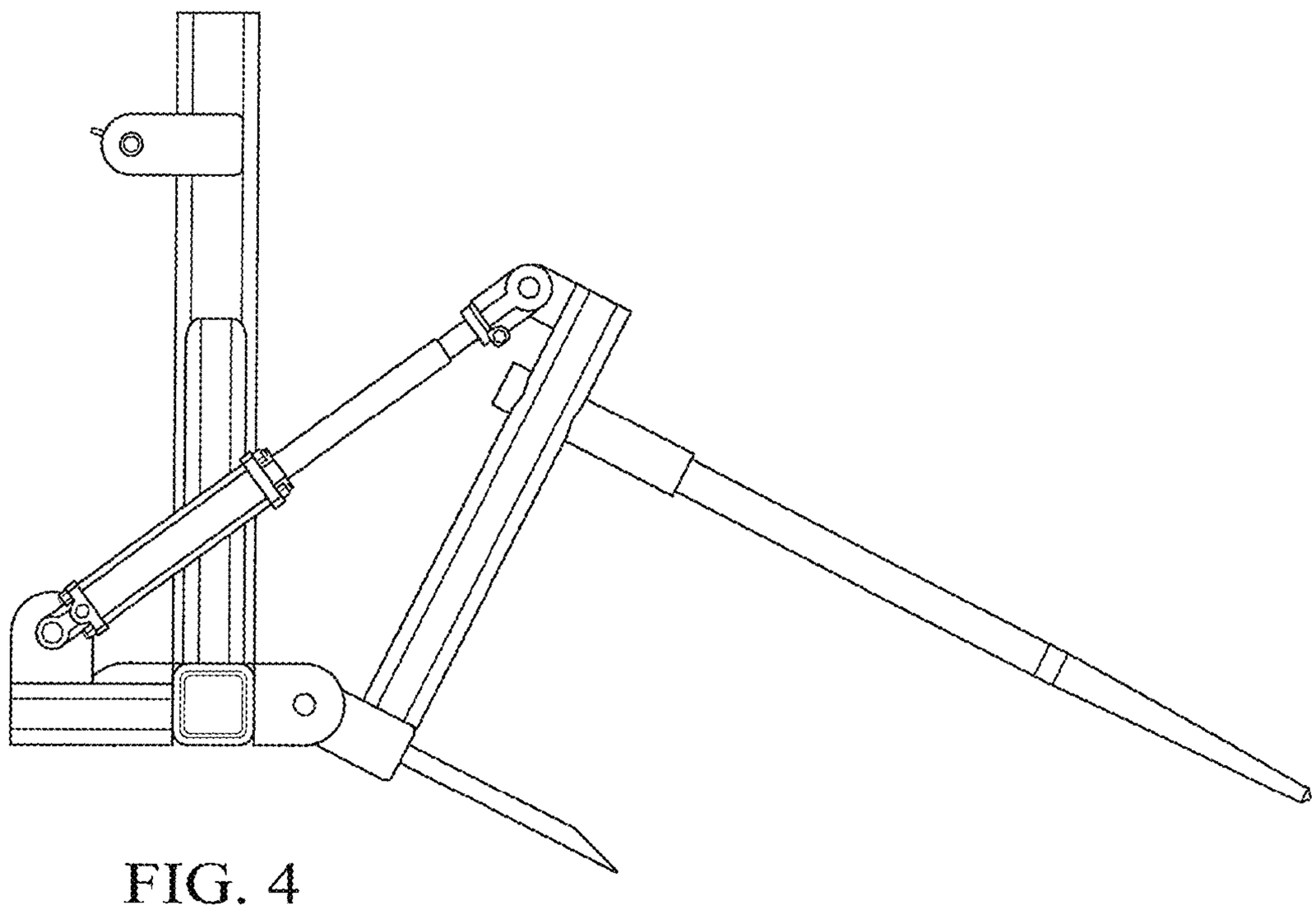

FIG. 4

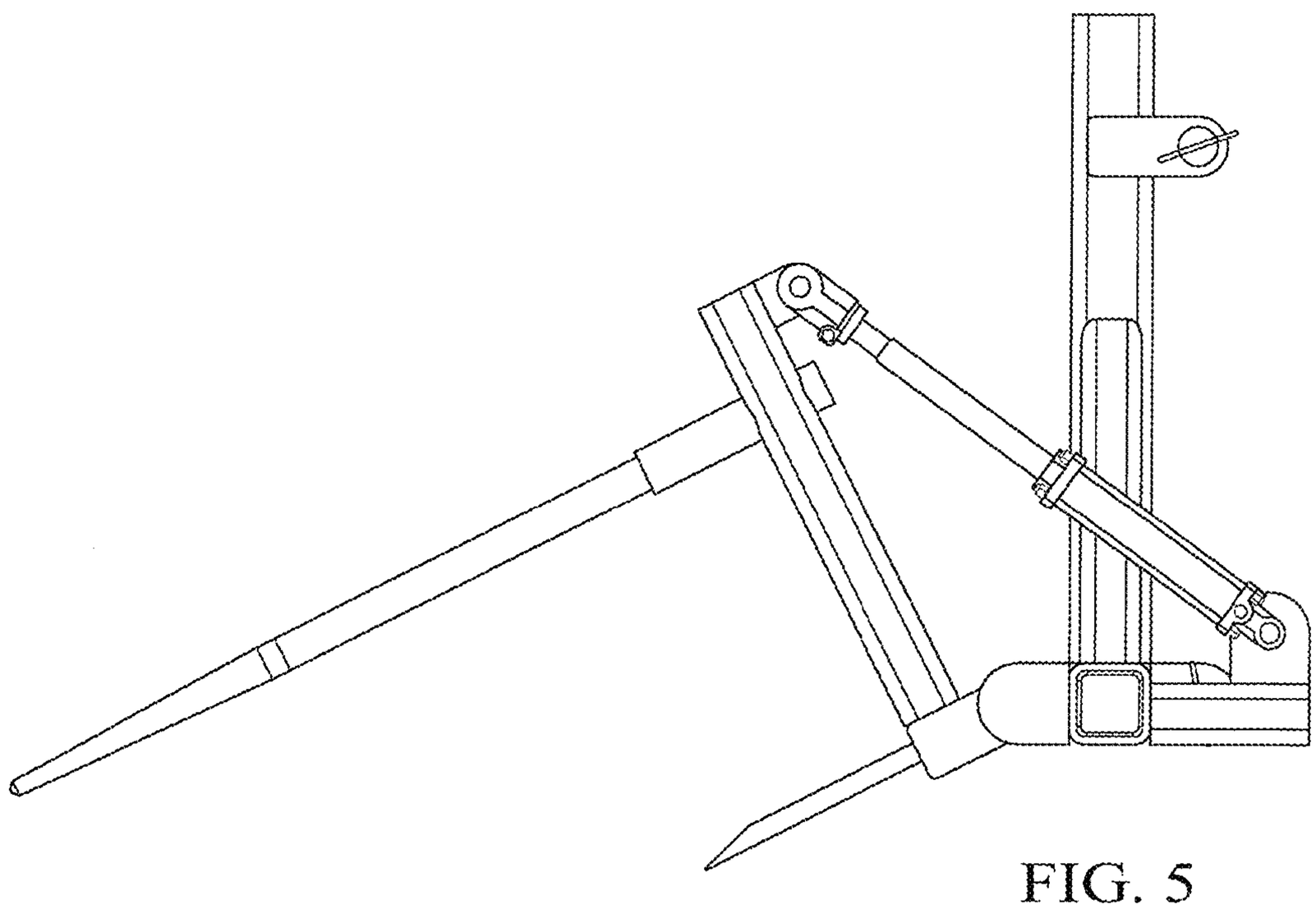

FIG. 5

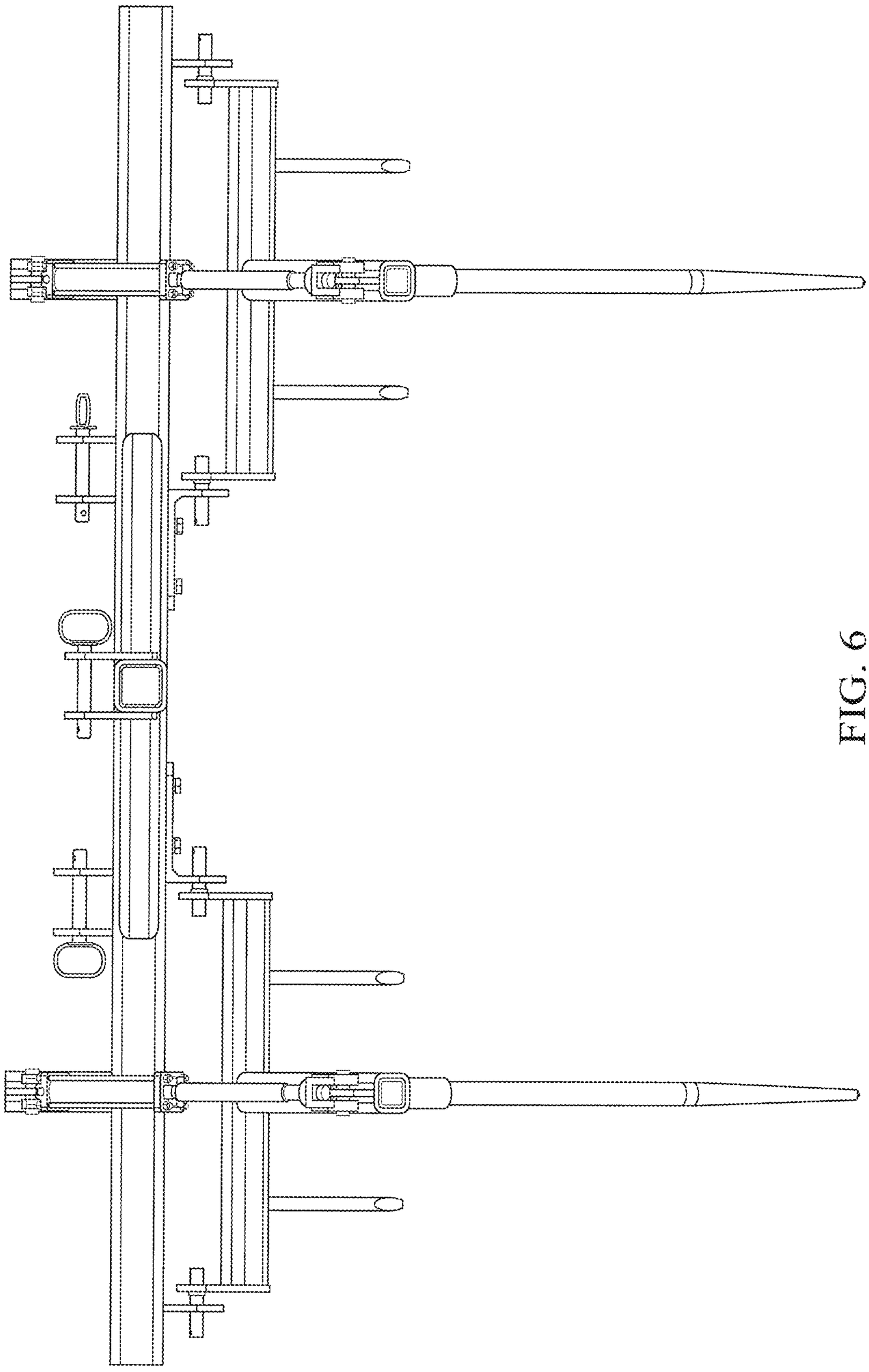

FIG. 6

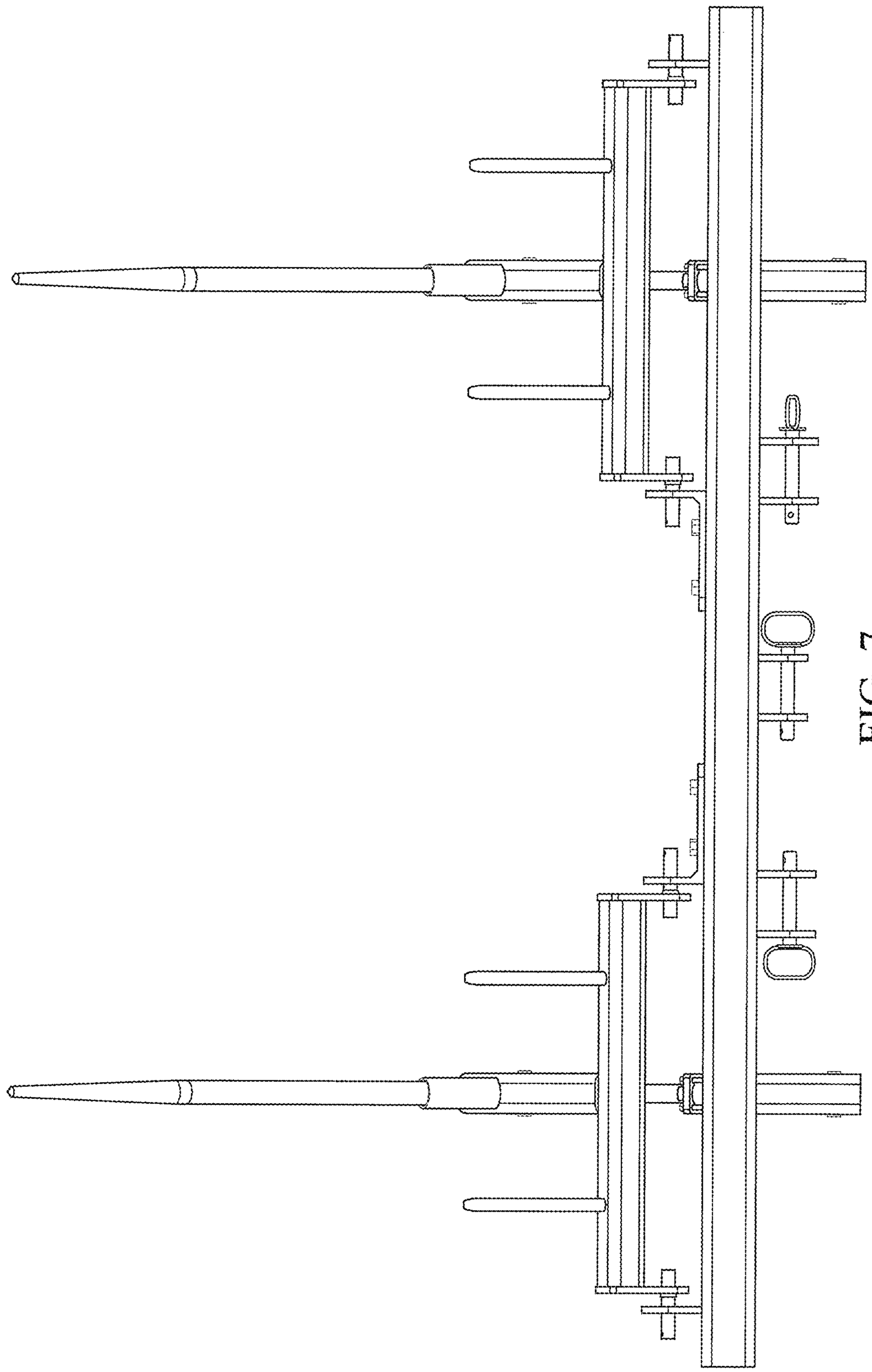

FIG. 7

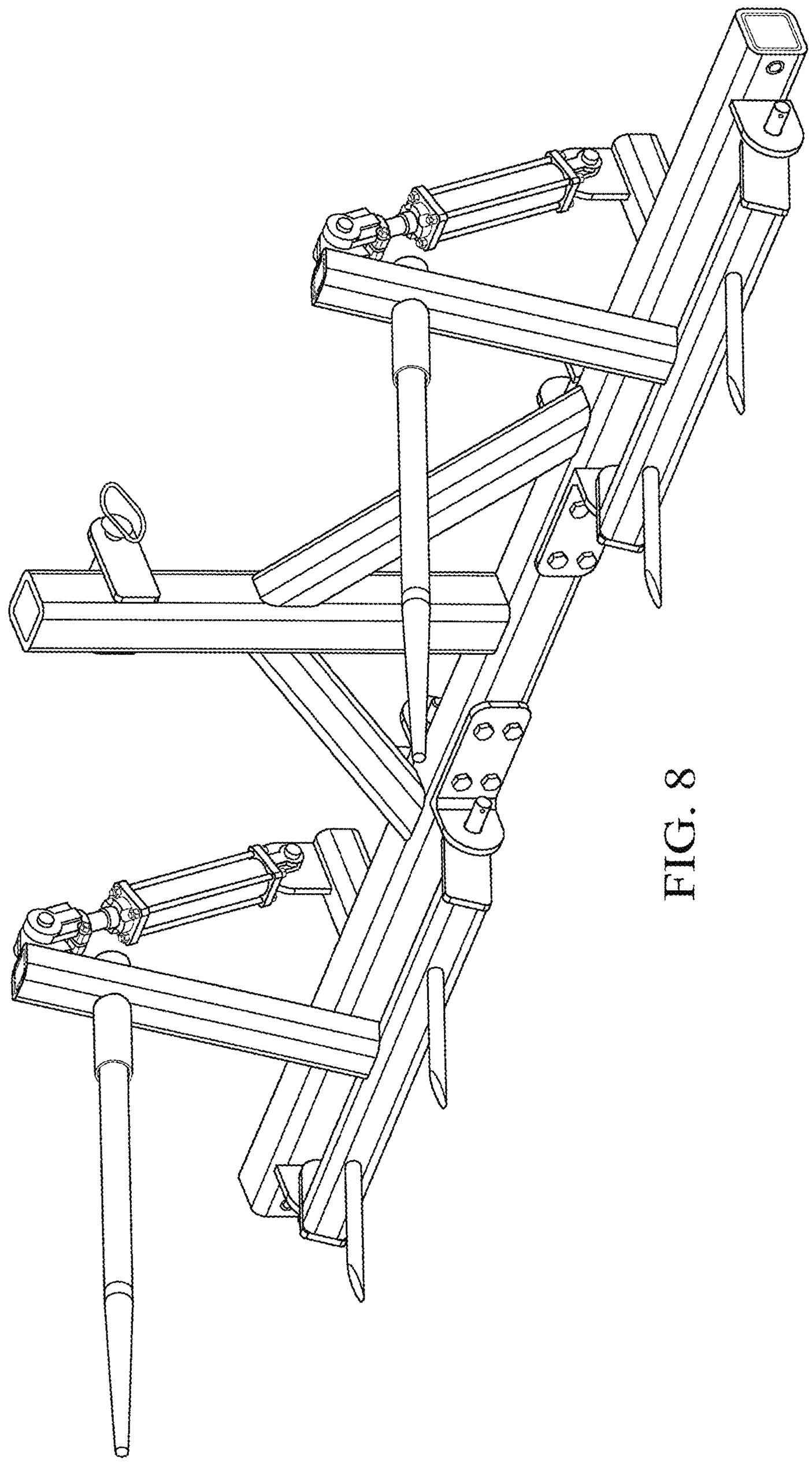

FIG. 8

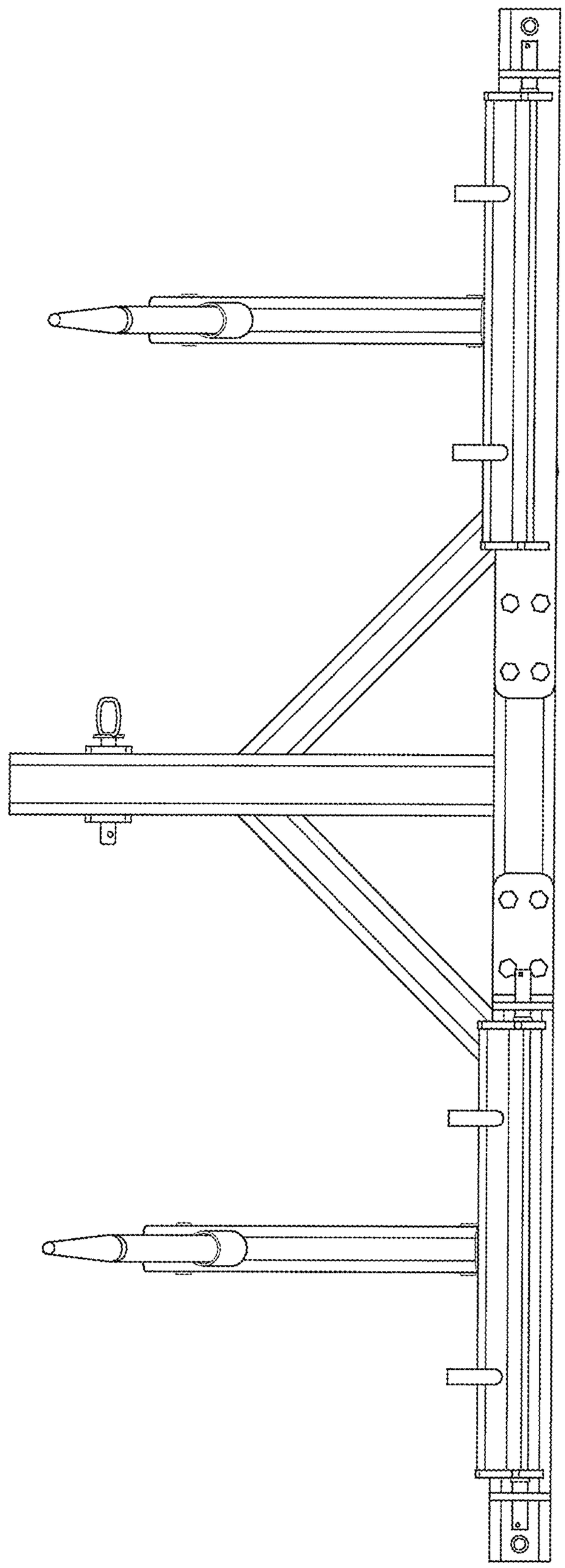

FIG. 9

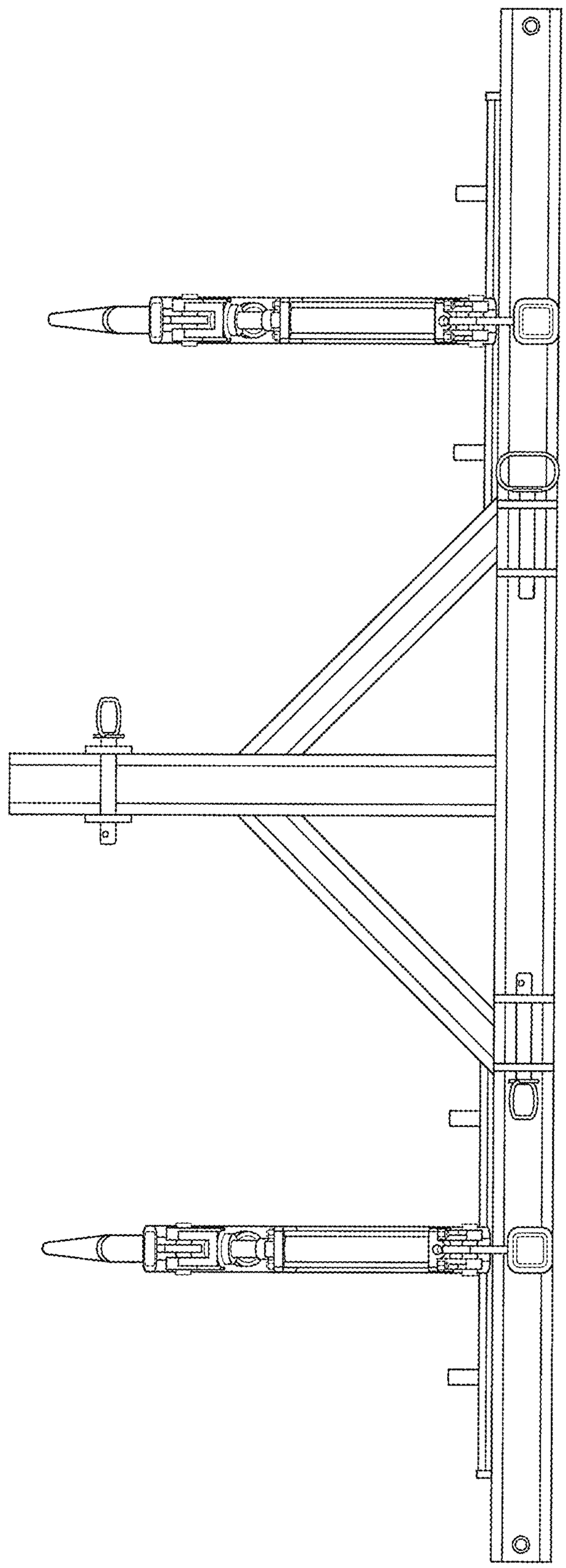

FIG. 10

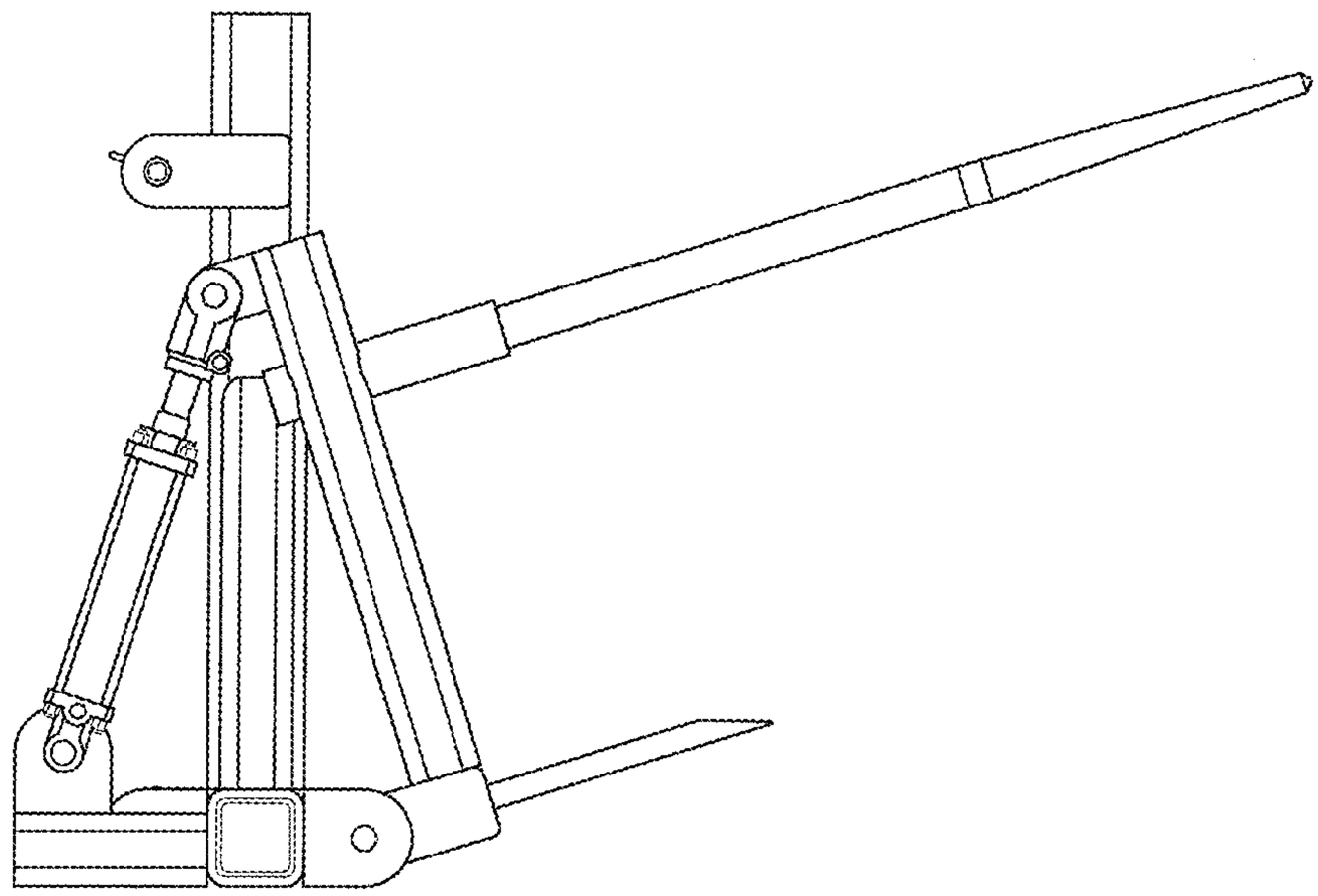

FIG. 11

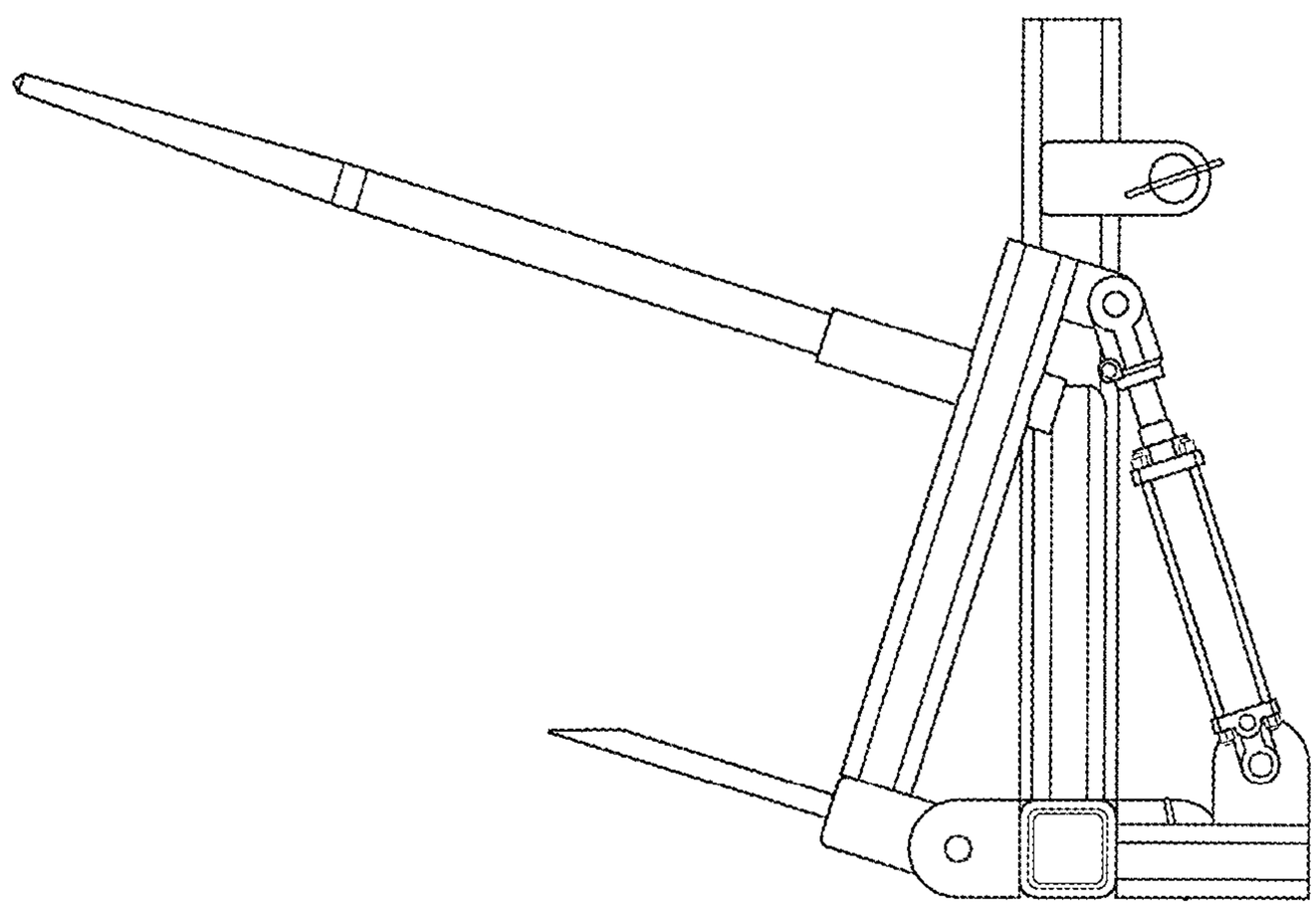

FIG. 12

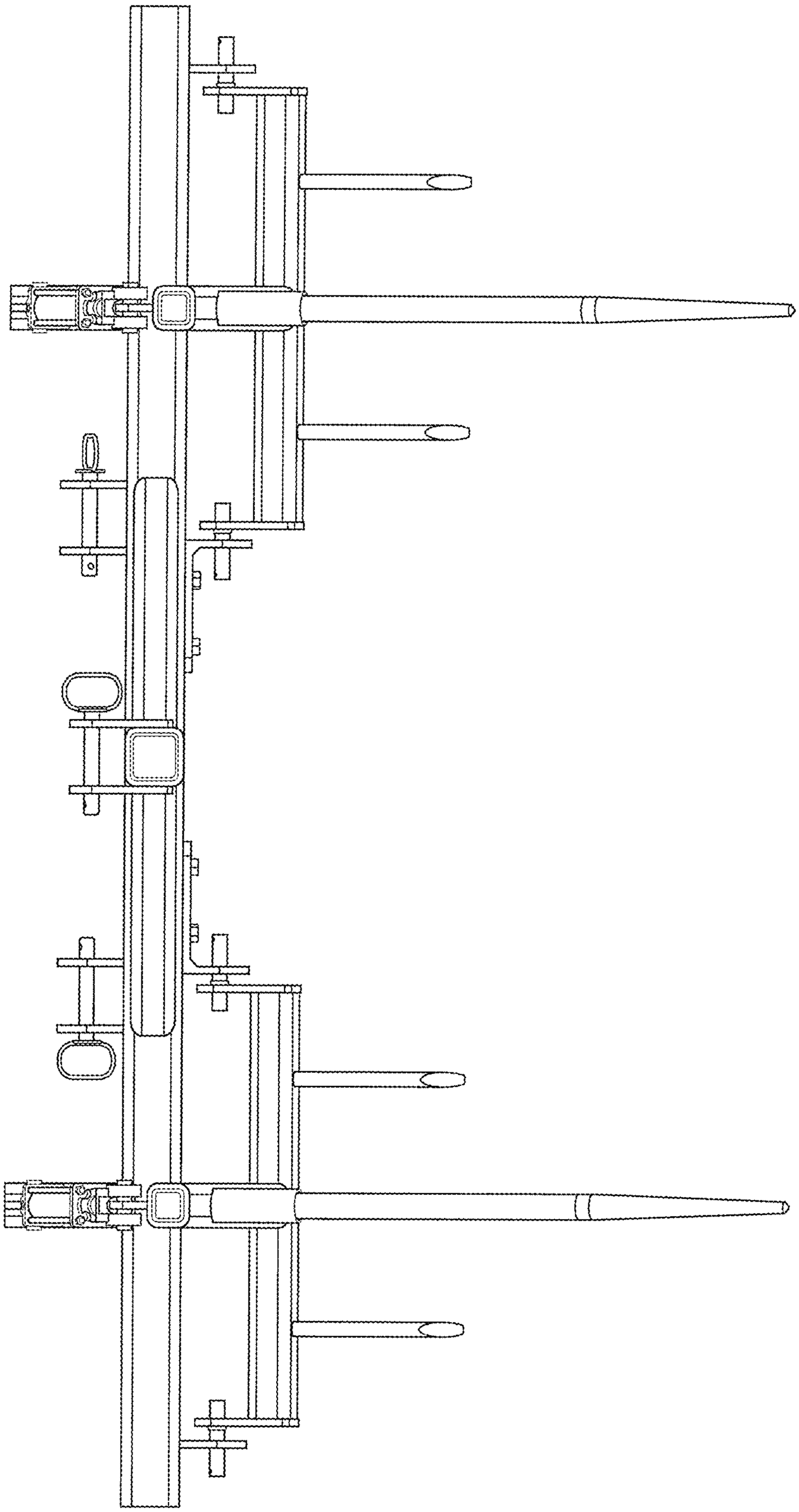

FIG. 13

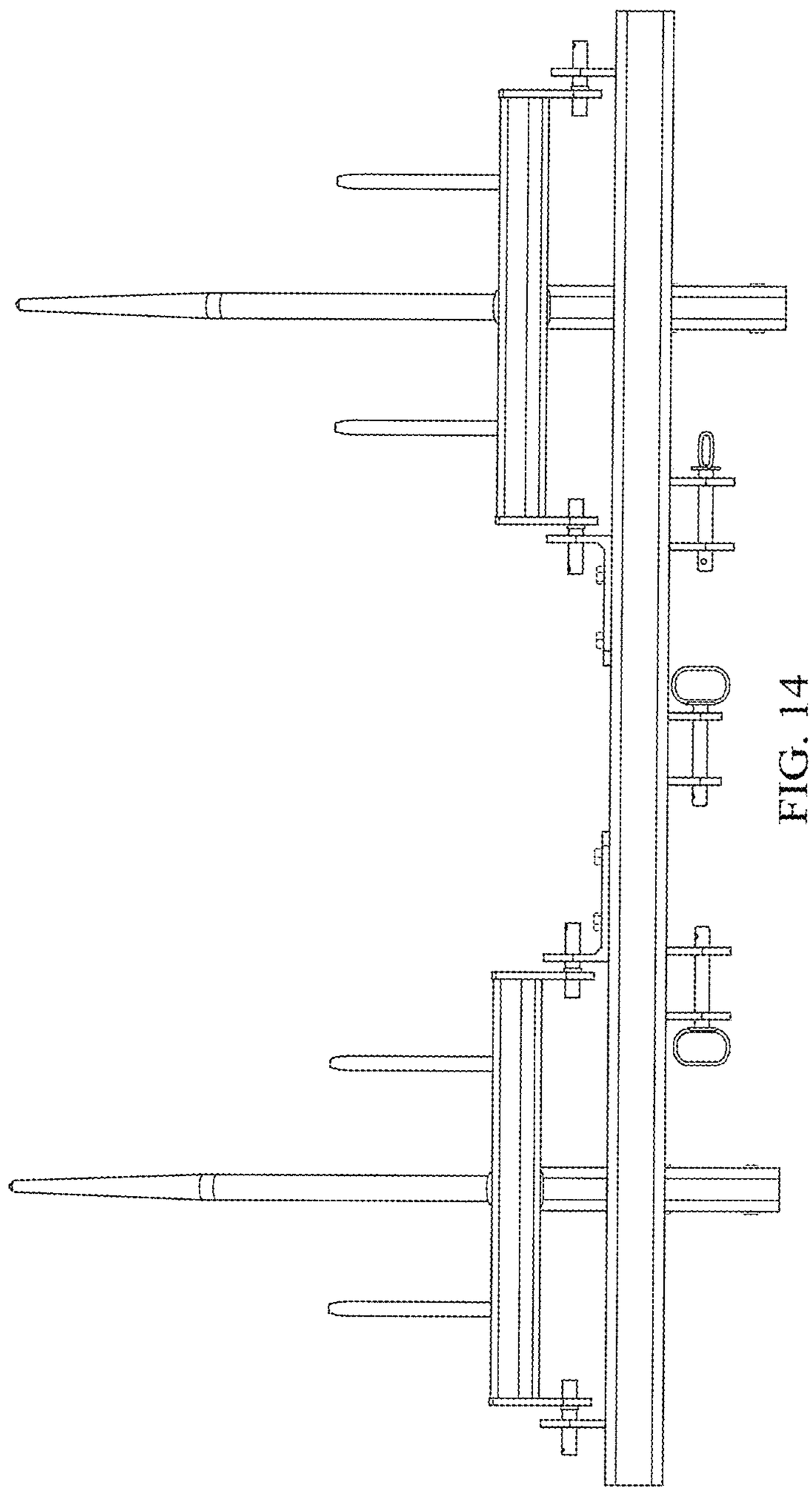

FIG. 14