US00D786516S

(12) United States Design Patent

Pindzola et al.

(10) Patent No.: US D786,516 S
(45) Date of Patent: ** May 9, 2017

(54) **DRYER APPLIANCE**

(71) Applicant: **Daniel R. Schumaier**, Elizabethton, TN (US)

(72) Inventors: **Kathryn A. Pindzola**, Johnson City, TN (US); **Daniel R. Schumaier**, Johnson City, TN (US)

(73) Assignee: **Daniel R. Schumaier**, Johnson City, TN (US)

(**) Term: **15 Years**

(21) Appl. No.: **29/540,905**

(22) Filed: **Sep. 29, 2015**

(51) **LOC (10) Cl.** **15-05**

(52) **U.S. Cl.**
USPC **D32/1**

(58) **Field of Classification Search**
USPC D32/1–2, 5, 30; D24/174
CPC F26B 9/003; F26B 21/001; F26B 21/003; F26B 25/001; F26B 25/063; F26B 25/16
See application file for complete search history.

(56) **References Cited**

U.S. PATENT DOCUMENTS

1,739,082	A		12/1929	Simmons et al.	
3,469,698	A		9/1969	Blendermann	
3,501,846	A		3/1970	Melega et al.	
3,885,931	A		5/1975	Schaller	
D257,489	S	*	11/1980	Thomas	D24/218
4,684,835	A		8/1987	Kline, Jr. et al.	
4,779,355	A		10/1988	Petros	
D303,442	S	*	9/1989	Harrison	D32/1
D317,409	S	*	6/1991	Chiarella	D3/294
D324,952	S	*	3/1992	Berland	D3/203.1
5,103,646	A		4/1992	Fini	
5,322,646	A		6/1994	Wright et al.	
5,365,630	A	*	11/1994	Beckrich	G02C 13/008 15/104.92
5,640,783	A	*	6/1997	Schumaier	A61L 2/07 34/219
5,766,315	A		6/1998	Moredock	
5,852,879	A	*	12/1998	Schumaier	A61L 2/07 34/218
D406,416	S	*	3/1999	Chan	D32/1
D414,304	S	*	9/1999	Schumaier	D32/1
6,186,179	B1		2/2001	Hill	
6,399,920	B1	*	6/2002	Guinn	F26B 9/003 219/386
D467,394	S	*	12/2002	Schumaier	D32/1
7,017,276	B2		3/2006	Greenspan et al.	
7,129,436	B1		10/2006	Corne	
7,340,995	B2		3/2008	Chiang et al.	

(Continued)

FOREIGN PATENT DOCUMENTS

CN	202068817	U	12/2011
WO	2012114128	A2	8/2012

Primary Examiner — Michael A. Pratt
Assistant Examiner — Michelle E Wilson
(74) *Attorney, Agent, or Firm* — Luedeka Neely Group PC

(57) **CLAIM**

The ornamental design for a dryer appliance, as shown and described.

DESCRIPTION

FIG. **1** is a top perspective view of the dryer appliance showing my new design;
FIG. **2** is a front elevation view thereof;
FIG. **3** is a rear elevation view thereof;
FIG. **4** is a right side elevation view thereof;
FIG. **5** is a left side elevation view thereof;
FIG. **6** is a top plan view thereof; and,
FIG. **7** is a bottom perspective view thereof.
The broken lines shown in the figures are included for the purpose of illustrating environment and form no part of the claimed design.

1 Claim, 7 Drawing Sheets

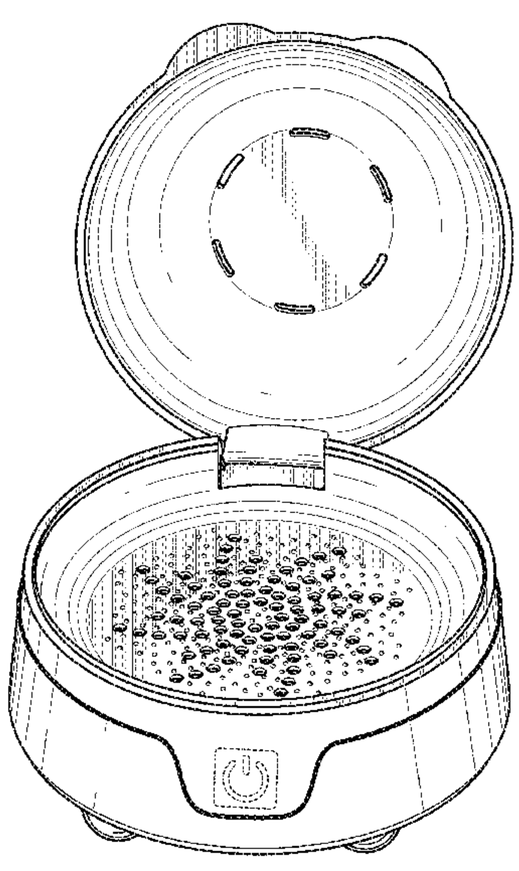

(56) **References Cited**

U.S. PATENT DOCUMENTS

7,585,210	B2	9/2009	Yurcak	
7,597,617	B2	10/2009	Solberg et al.	
7,762,006	B2	7/2010	Kasso	
7,814,678	B2	10/2010	Romanek	
D643,163	S *	8/2011	Kessler	D32/1
8,112,900	B2	2/2012	Romanek	
2004/0244215	A1 *	12/2004	Greenspan	F26B 21/083 34/80
2010/0011613	A1	1/2010	Husung	
2013/0220385	A1	8/2013	Gil	

* cited by examiner

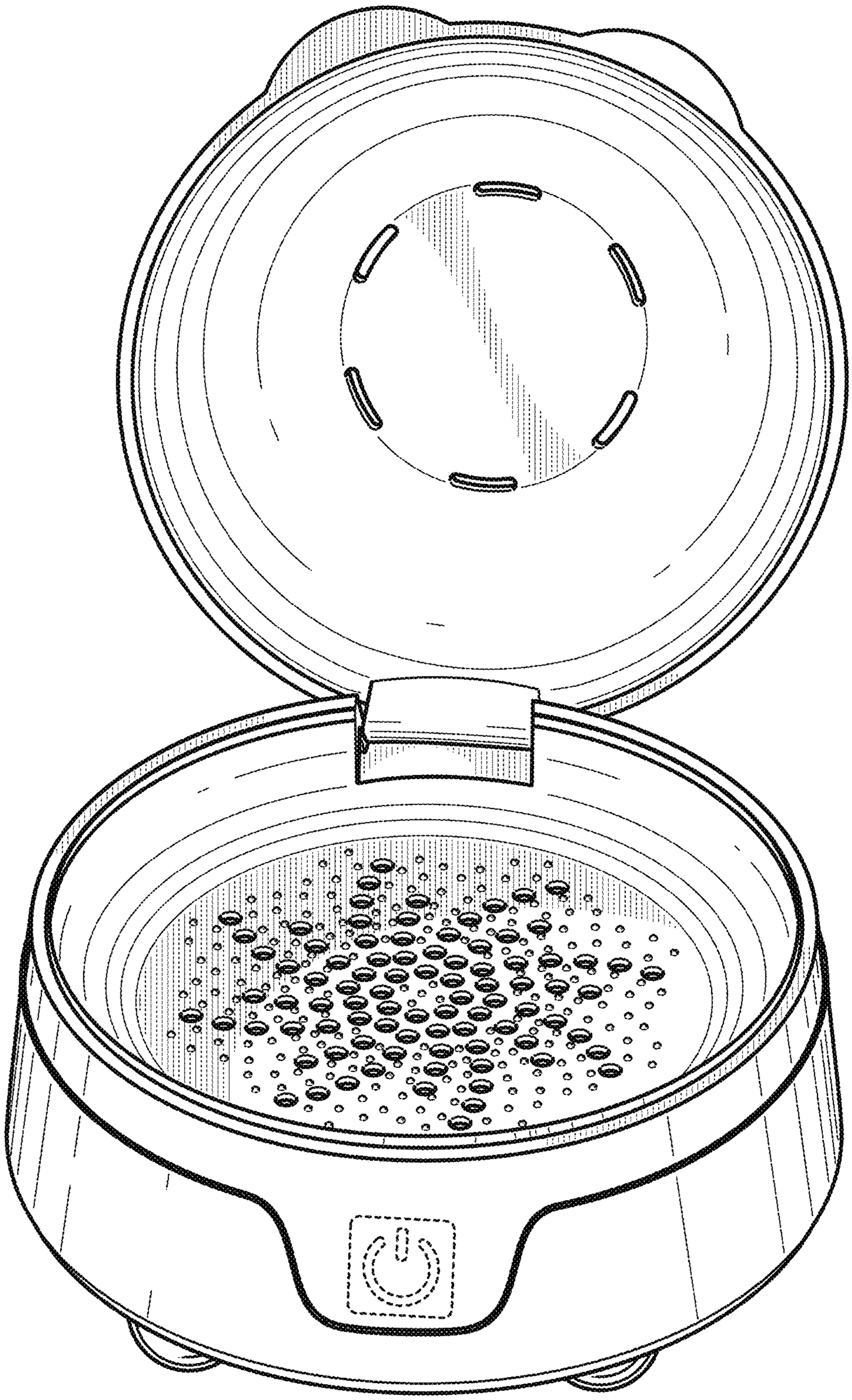

FIG. 1

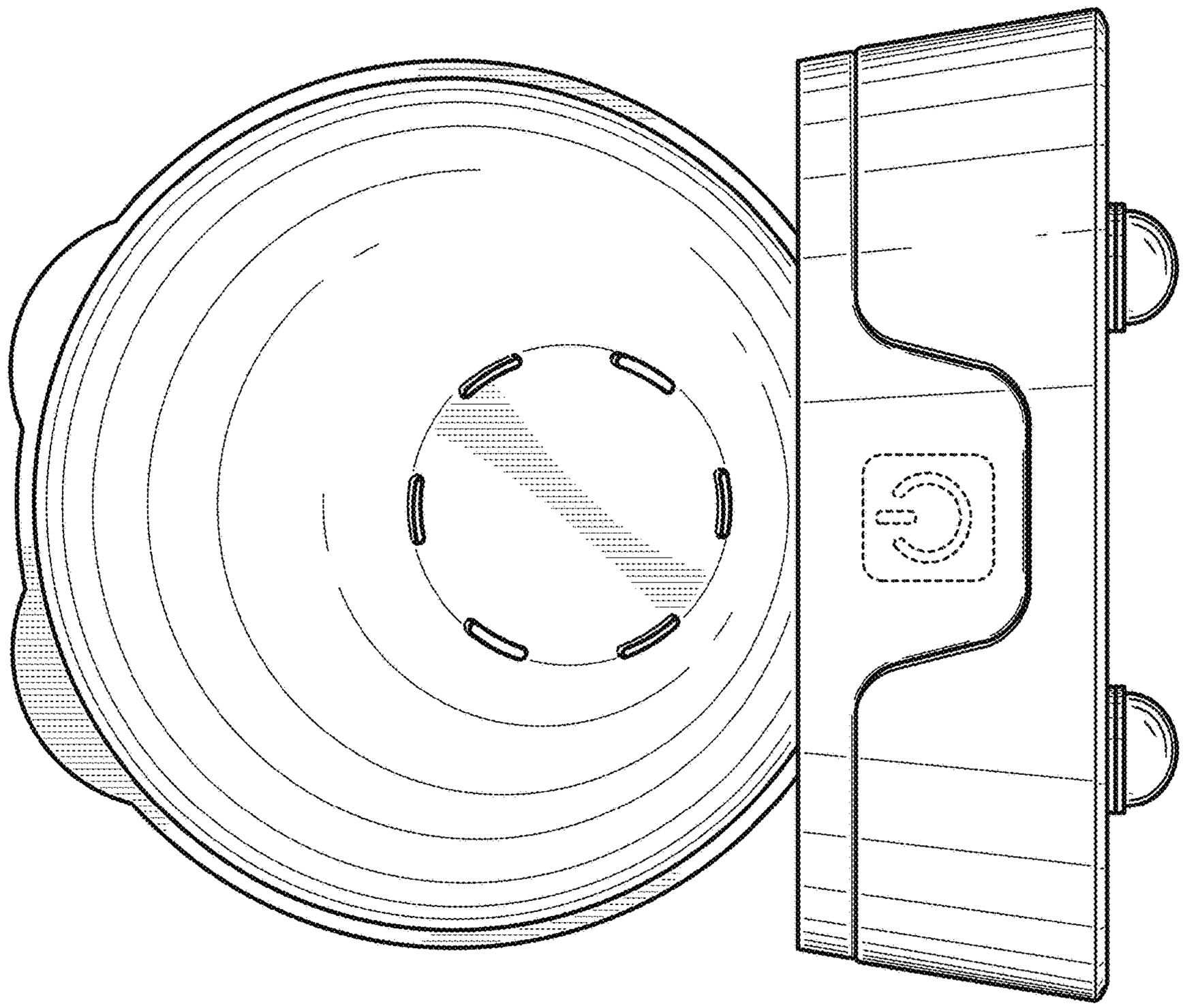

FIG. 2

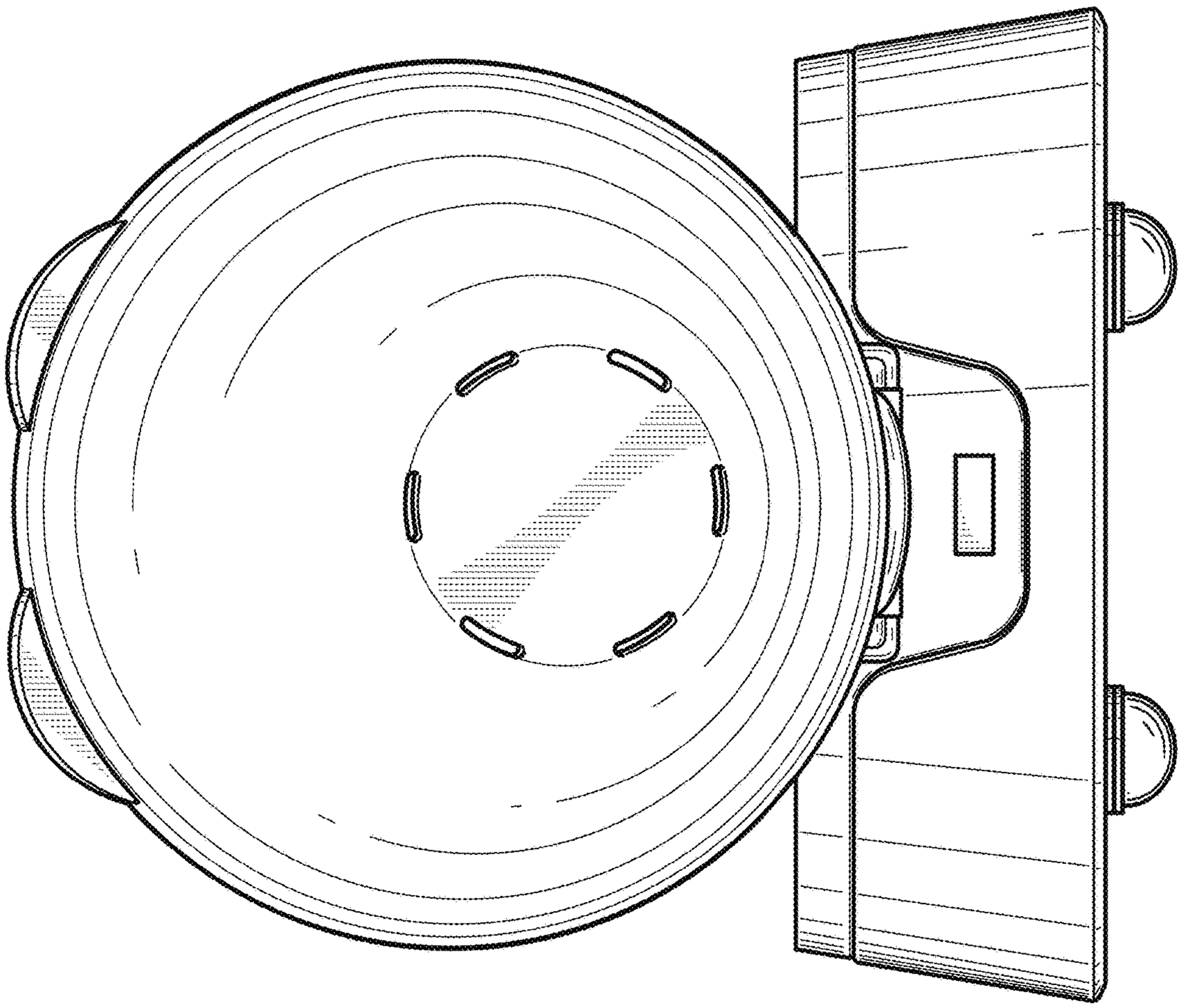

FIG. 3

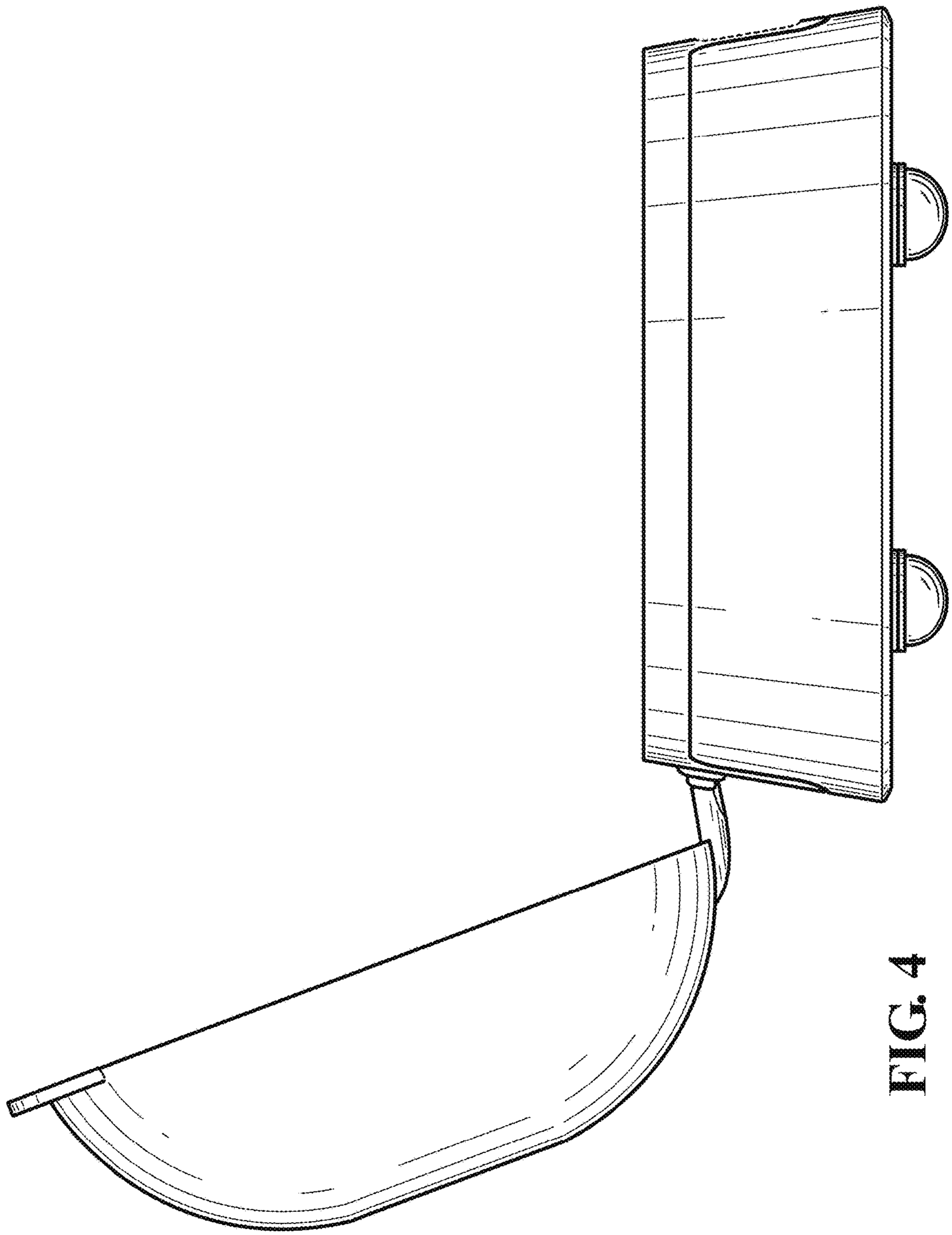

FIG. 4

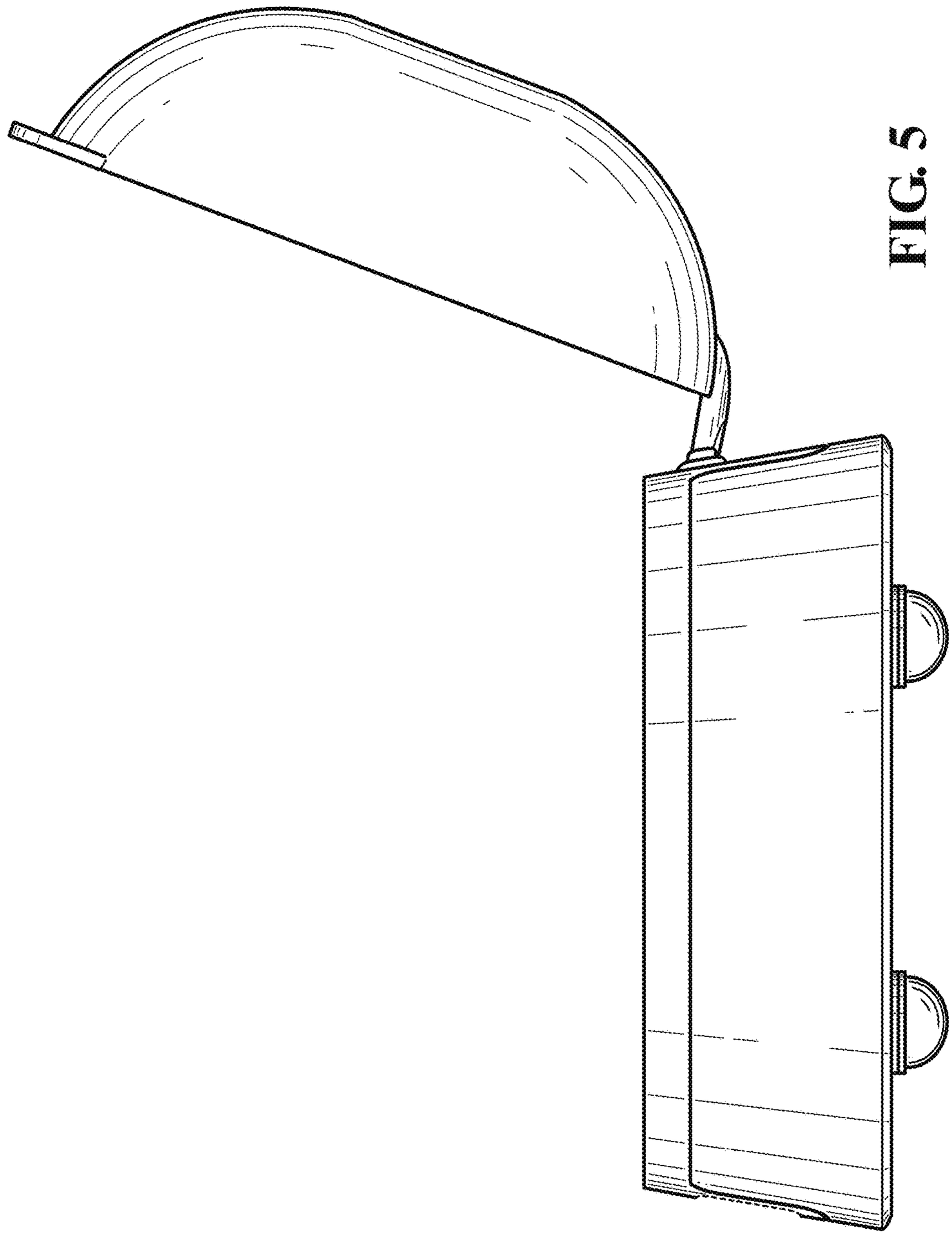

FIG. 5

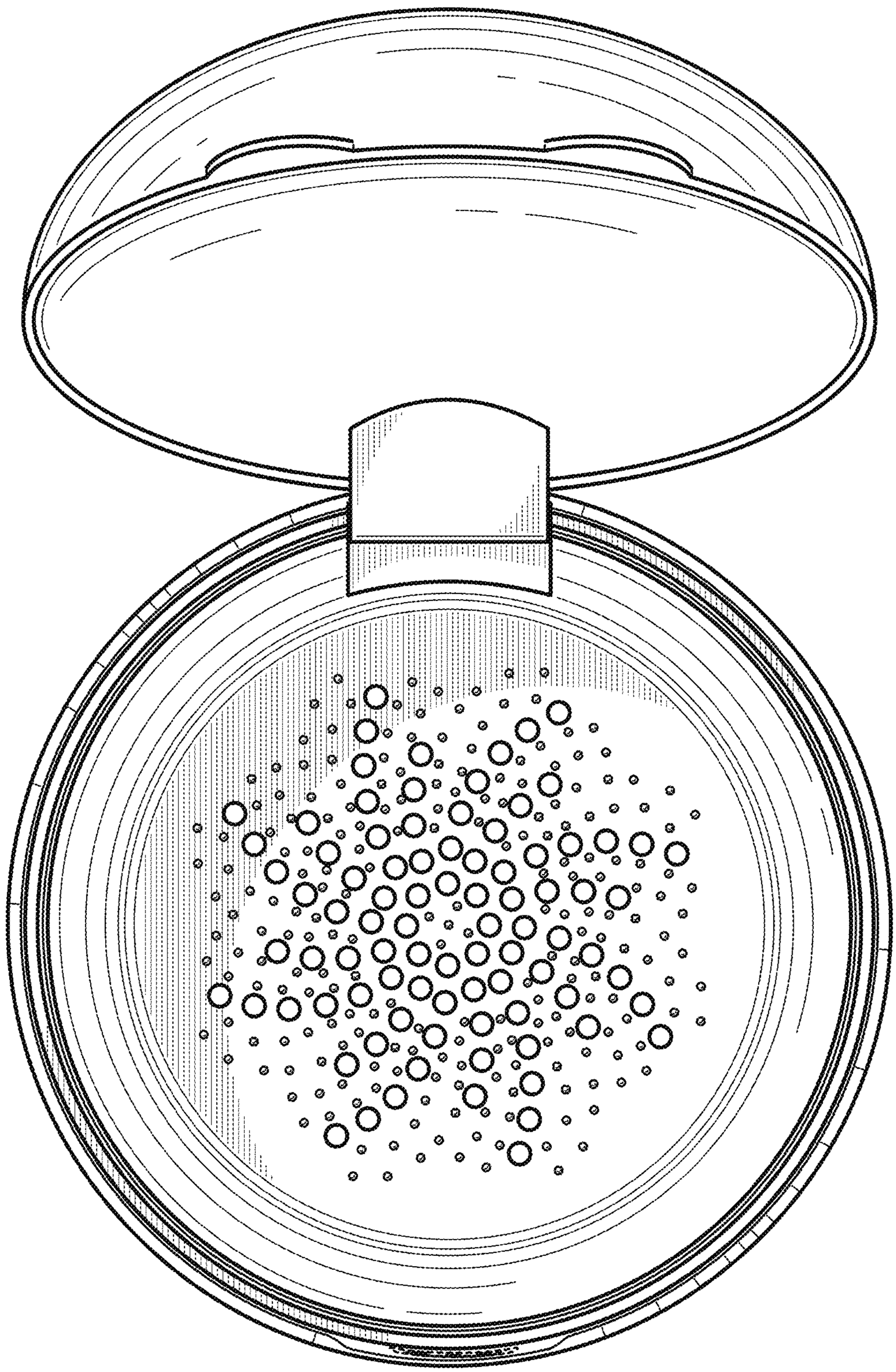

FIG. 6

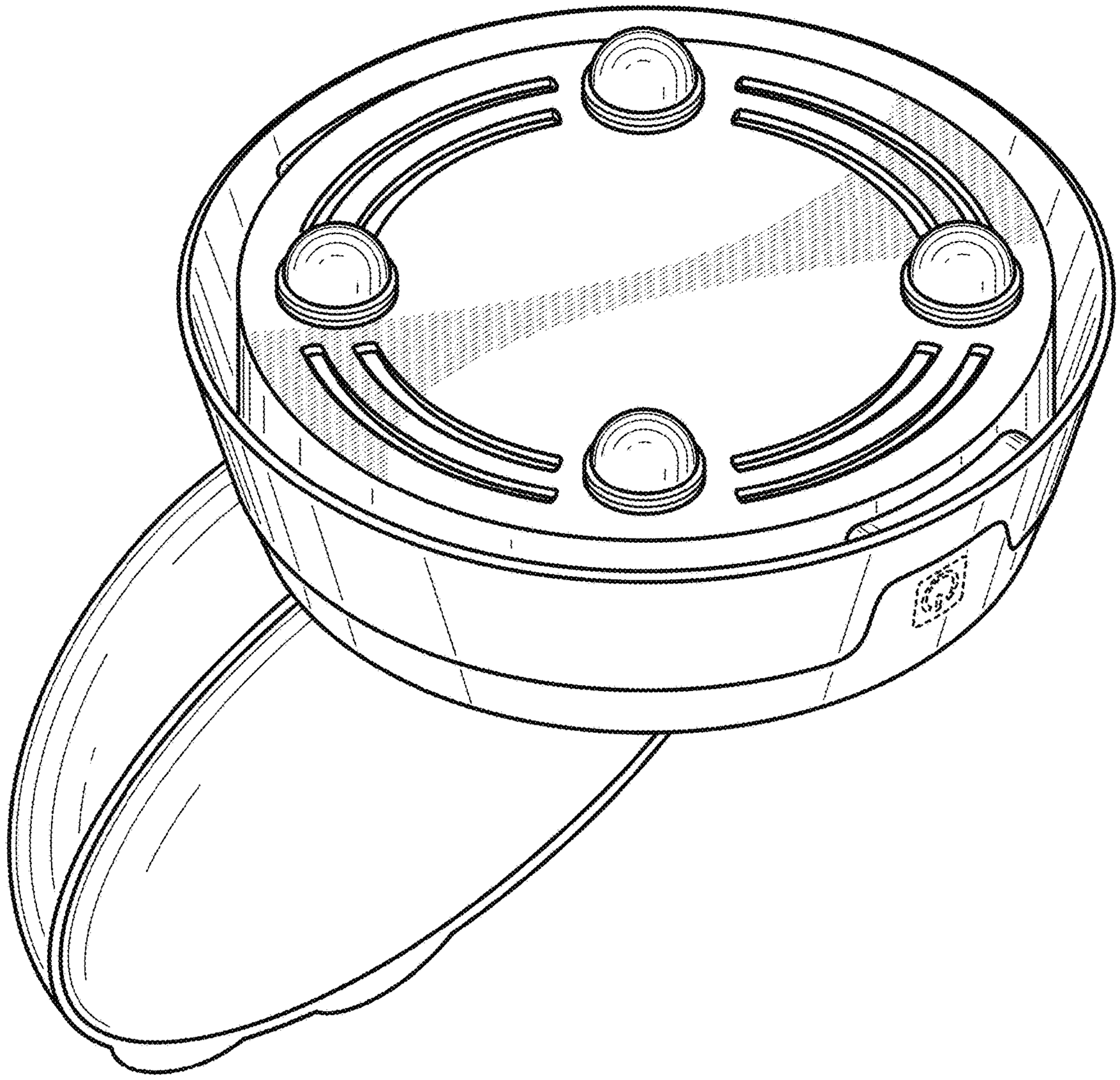

FIG. 7