US00D785802S

(12) United States Design Patent

Hyde et al.

(10) Patent No.: US D785,802 S
(45) Date of Patent: ** May 2, 2017

(54) **CARDIOPULMONARY BYPASS SYSTEM SUPPORT STRUCTURE**

(71) Applicant: **MAQUET Cardiopulmonary AG**, Rastatt (DE)

(72) Inventors: **Aidan Hyde**, Collingswood, NJ (US); **Daniel Medart**, Hillsdale, NJ (US); **Daniel A. Walters**, Rockaway Township, NJ (US)

(73) Assignee: **MAQUET CARDIOPULMONARY AG**, Rastatt (DE)

(**) Term: **15 Years**

(21) Appl. No.: **29/526,779**

(22) Filed: **May 13, 2015**

(51) **LOC (10) Cl.** **24-01**

(52) **U.S. Cl.**
USPC **D24/169**; D24/185

(58) **Field of Classification Search**
USPC D24/107, 108, 111, 169, 185, 186
CPC A61M 1/16; A61M 1/1601; A61M 1/1621; A61M 1/1654; A61M 1/36; A61M 1/3693; A61M 1/3696; A61M 2209/084; A61M 2205/502; A61M 2205/505; A16B 50/10; A16B 50/13; A16B 50/15
See application file for complete search history.

(56) **References Cited**

U.S. PATENT DOCUMENTS

D299,531	S	*	1/1989	Troutner	D24/169
5,641,144	A	*	6/1997	Hendrickson	A61M 1/16 128/DIG. 26
D395,085	S	*	6/1998	Kenley	D24/169
D615,724	S	*	5/2010	Girard	D24/185
D616,551	S	*	5/2010	Fallon	D24/185
D619,723	S	*	7/2010	Lambalot	D24/185
D678,895	S		3/2013	Ebler et al.	
D752,231	S	*	3/2016	Halter	D24/185
2004/0064080	A1	*	4/2004	Cruz	A61M 1/16 604/5.04
2009/0012455	A1	*	1/2009	Childers	A61M 1/28 604/29
2014/0127063	A1		5/2014	Petersen et al.	

OTHER PUBLICATIONS

Sorin | S5 System Operating Instructions, Sorin Group Deutschland GmbH, 2006, 2007.
Sorin article, http://www.sorin.com/products/cardiac-surgery/perfusion/hlm/s5, printed on Jun. 13, 2015, 11 pages.
Hessel, Eugene A., "Circuitry and Cannulation Techniques", Chapter 5, Cardiopulmonary Bypass: Principles and Practices, edited by Glenn P. Gravlee, 3rd edition, 2008, pp. 63-65.

* cited by examiner

Primary Examiner — Anhdao Doan
(74) *Attorney, Agent, or Firm* — Wesley Scott Ashton; Kirk Swenson

(57) **CLAIM**

The ornamental design for a cardiopulmonary bypass system support structure, as shown and described.

DESCRIPTION

FIG. **1** is a front perspective view of a cardiopulmonary bypass system support structure;
FIG. **2** is a rear perspective view thereof;
FIG. **3** is a front view thereof;
FIG. **4** is a rear view thereof;
FIG. **5** is a right side view thereof;
FIG. **6** is a left side view thereof;
FIG. **7** is a top view thereof; and,
FIG. **8** is a bottom view thereof.
The broken lines illustrate portions of the cardiopulmonary bypass system support structure that form no part of the claimed design.

1 Claim, 7 Drawing Sheets

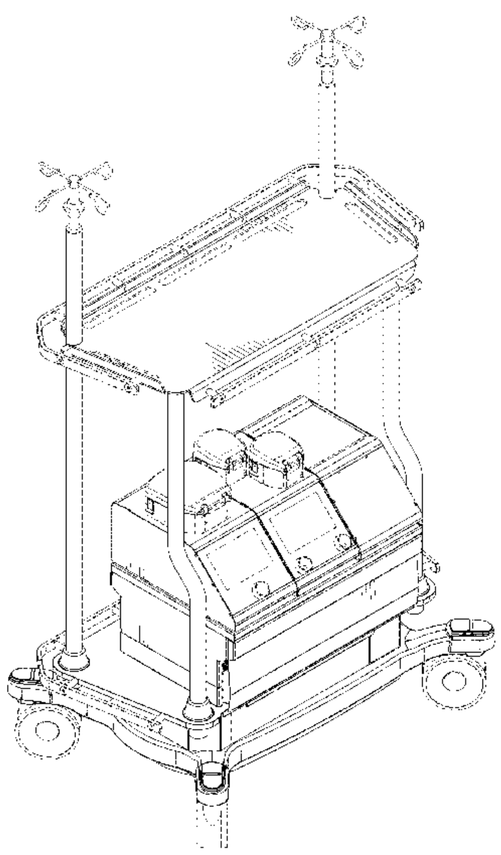

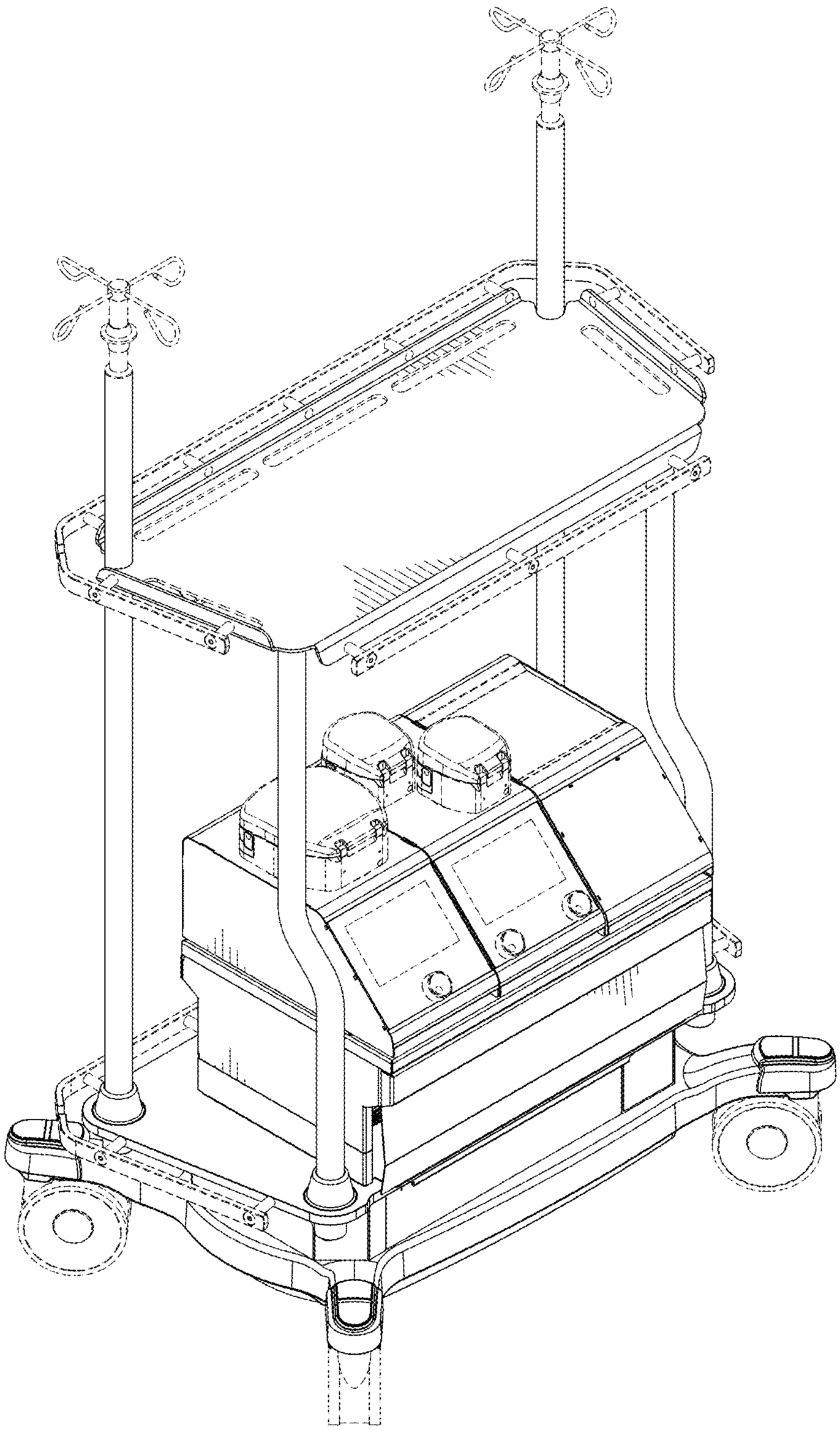

FIG. 1

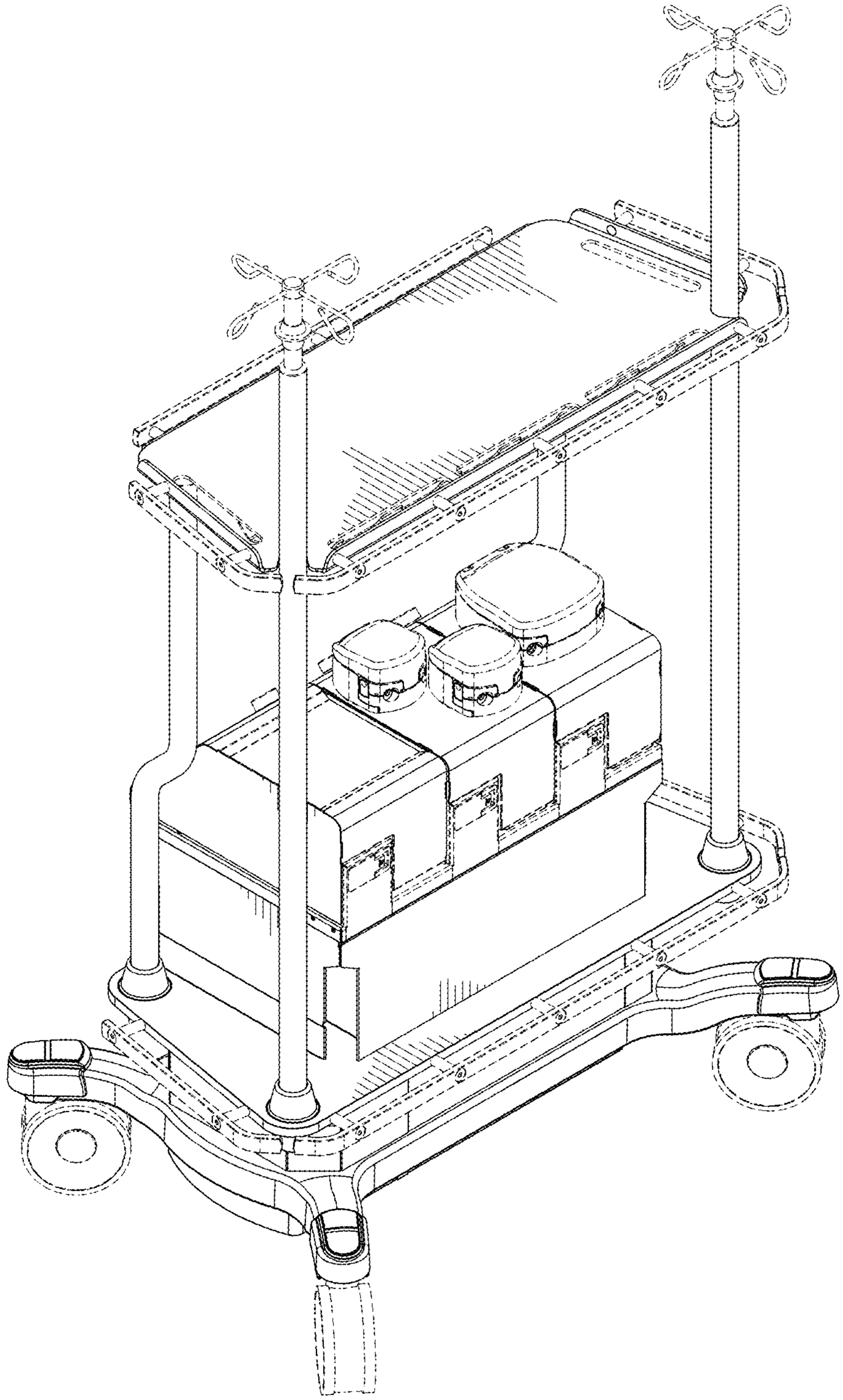

FIG.2

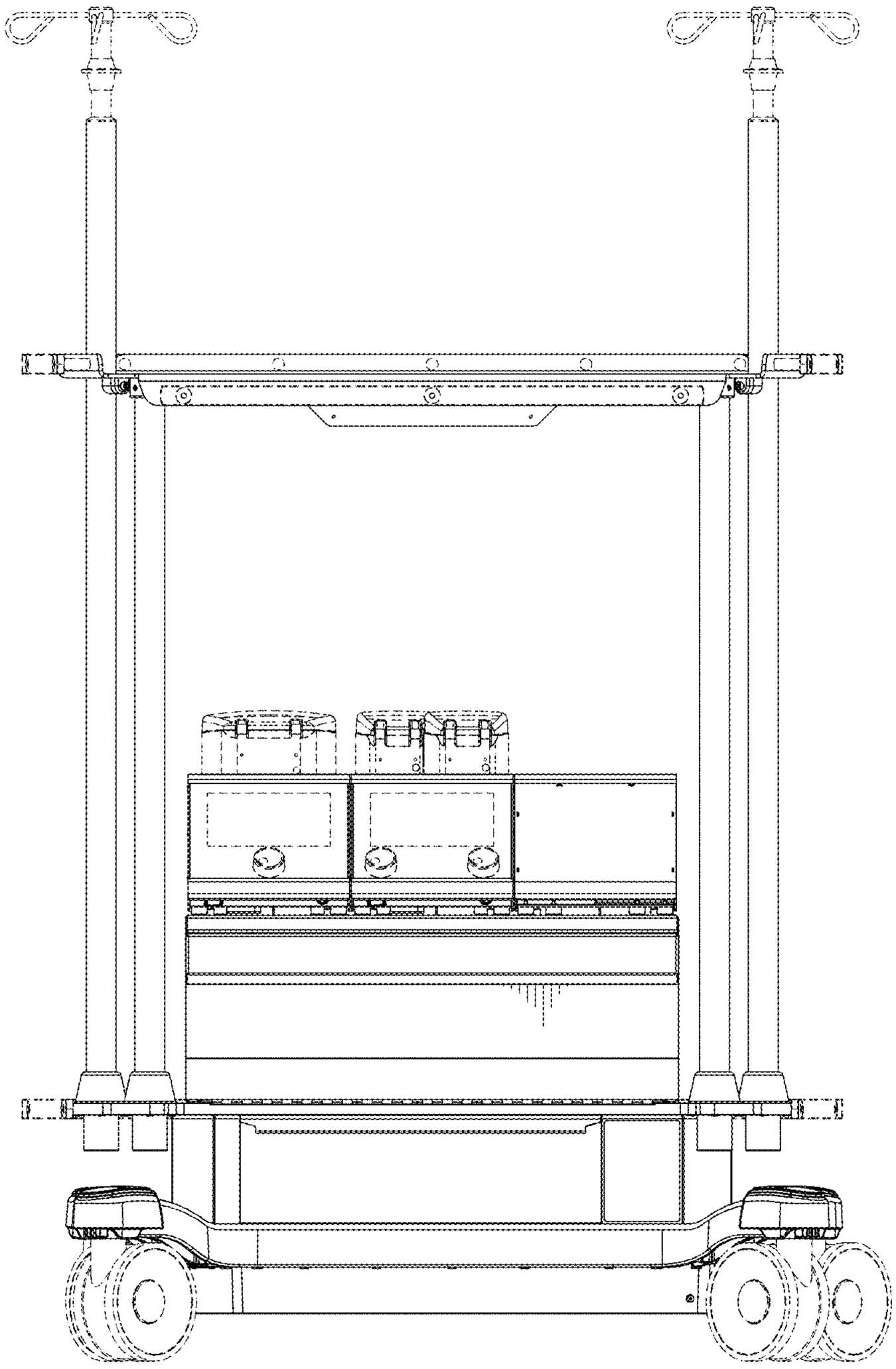

FIG. 3

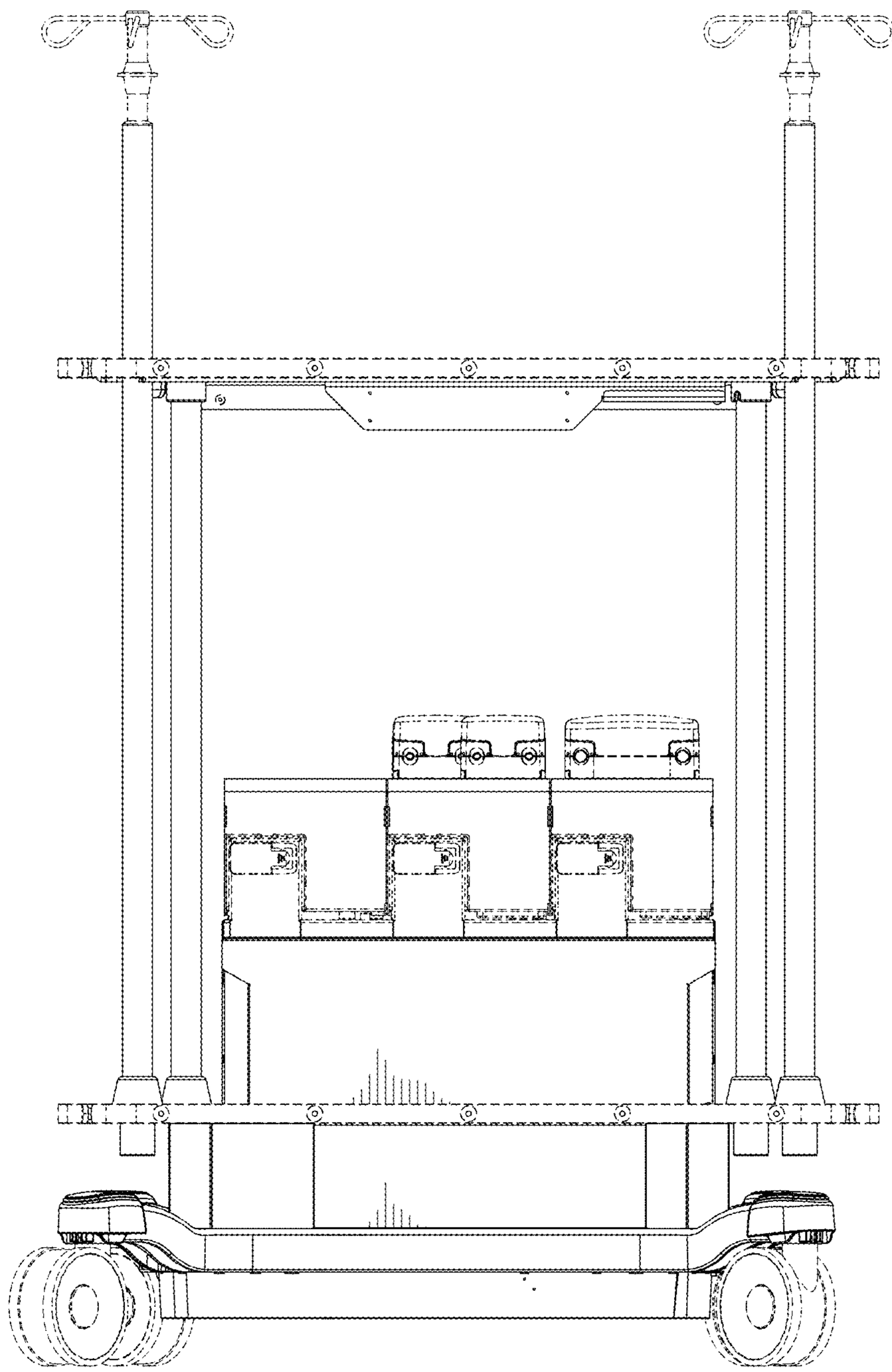

FIG.4

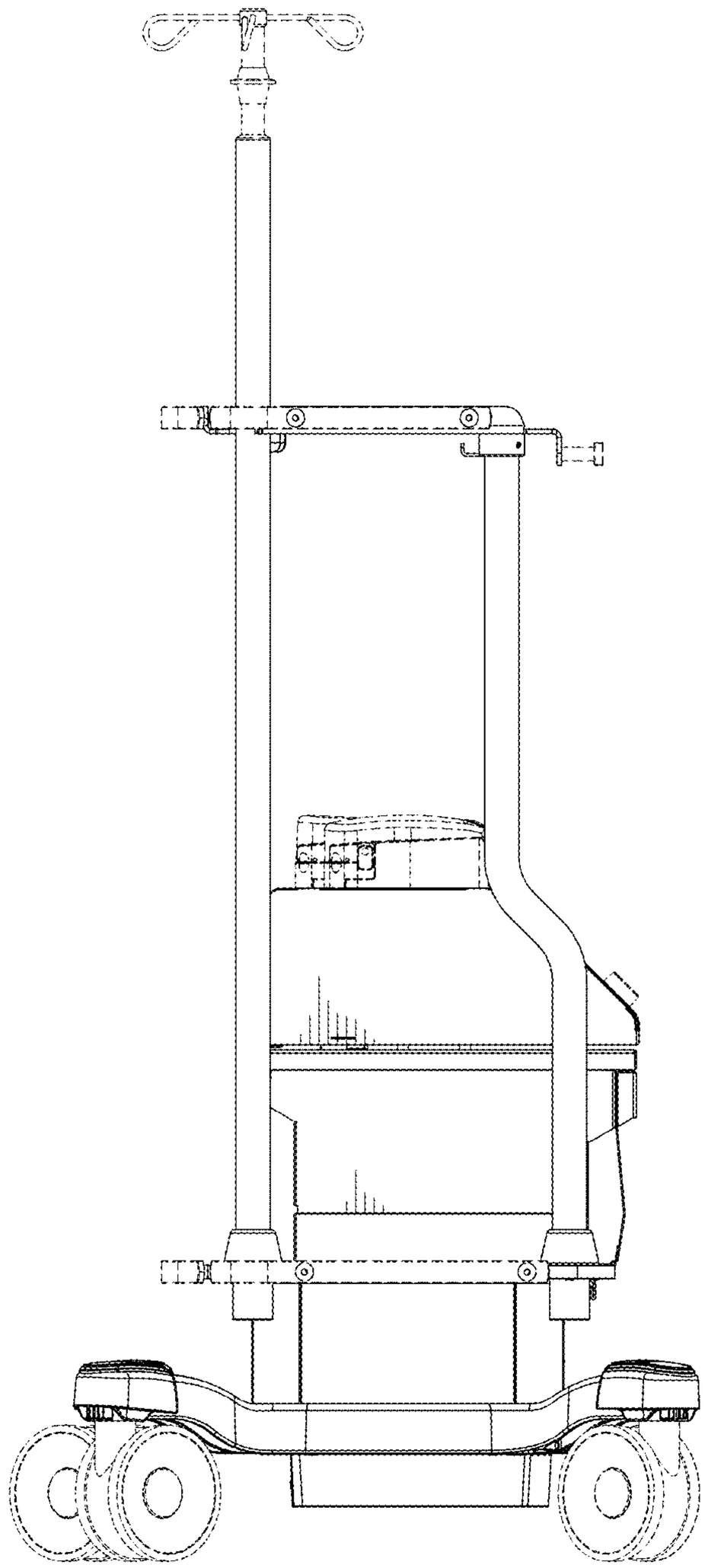

FIG.5

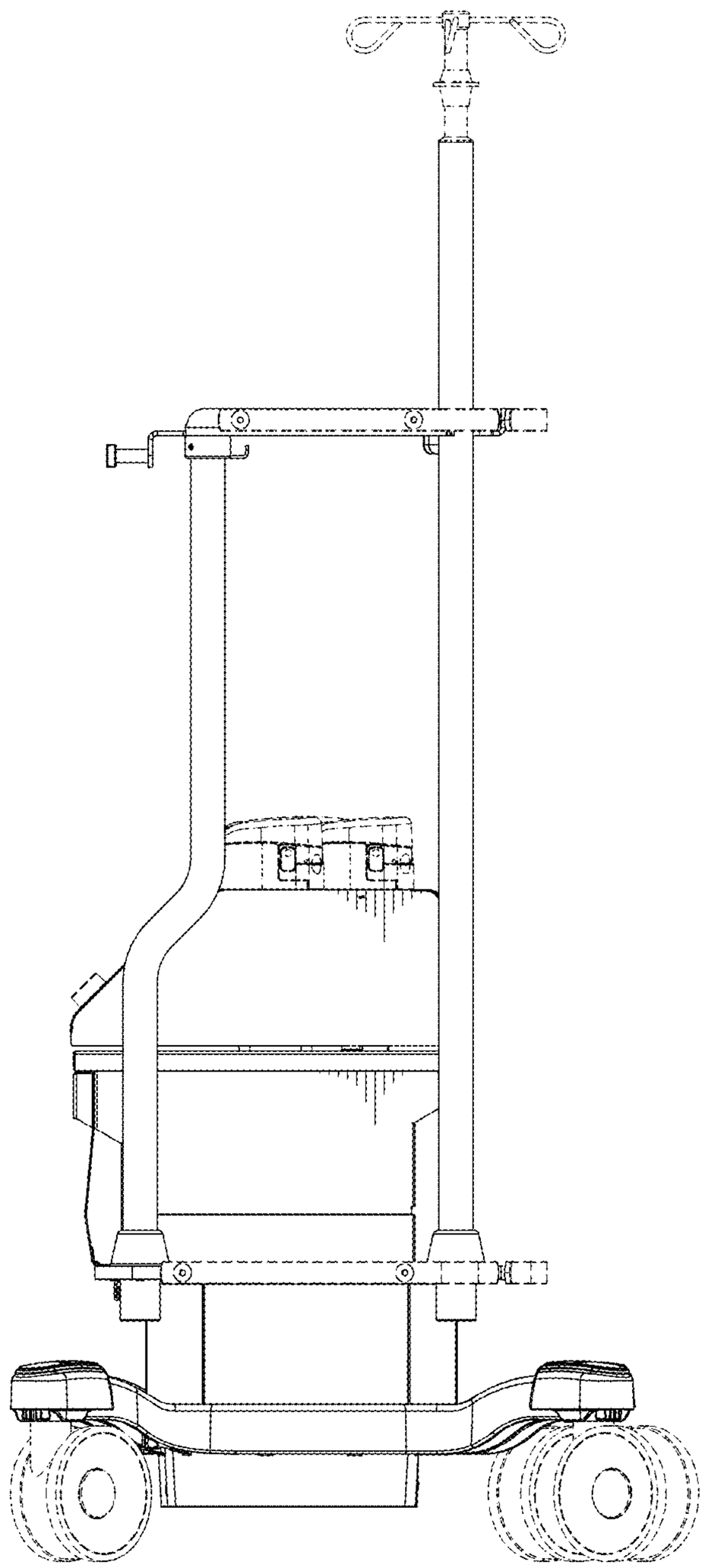

FIG.6

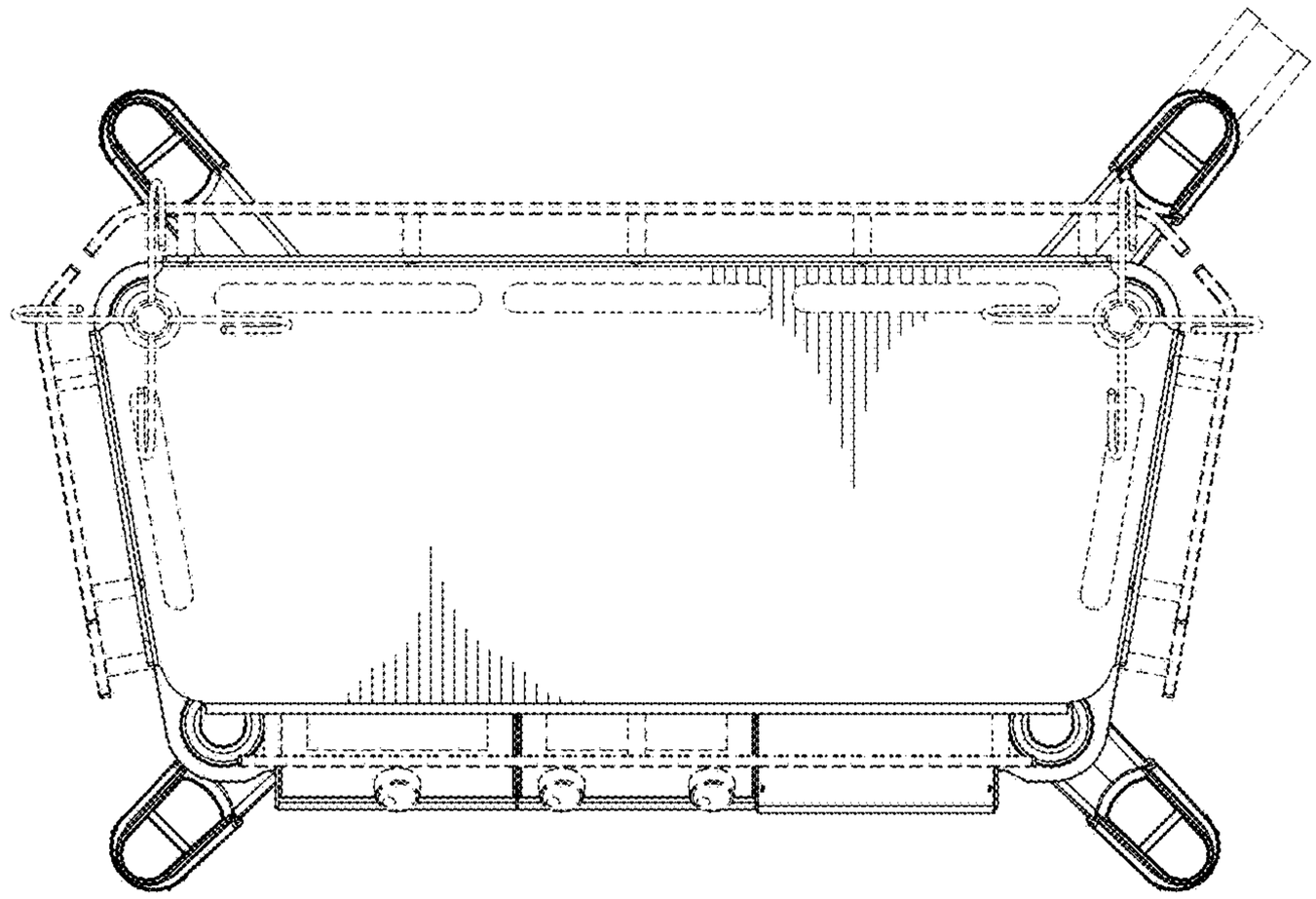

FIG. 7

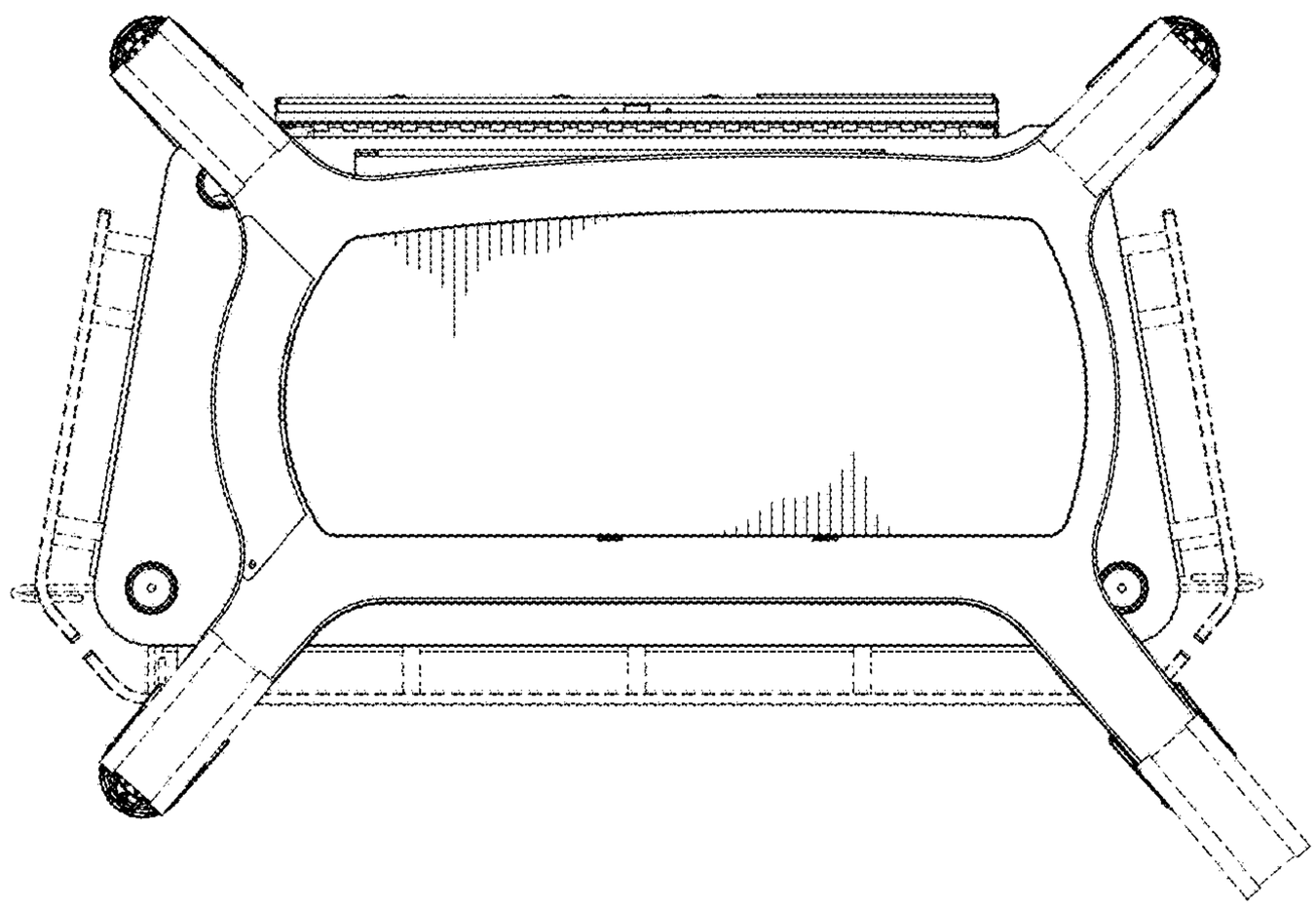

FIG. 8