US00D785241S

(12) United States Design Patent

Stephens et al.

(10) Patent No.: US D785,241 S
(45) Date of Patent: ** Apr. 25, 2017

(54) **ACCESSORY FOR A HAIRDRYER**

(71) Applicant: **Dyson Technology Limited**, Wiltshire (GB)

(72) Inventors: **Philip Jonathan Stephens**, Swindon (GB); **Boris Zukina**, Bristol (GB); **Christopher John Tyler**, Leicester (GB); **Andrea Ee-Va Lim**, Bristol (GB); **Adam James Bates**, Oxford (GB); **Alexander Stuart Knox**, Bath (GB)

(73) Assignee: **Dyson Technology Limited**, Malmesbury, Wiltshire (GB)

(**) Term: **15 Years**

(21) Appl. No.: **29/551,454**

(22) Filed: **Jan. 13, 2016**

(30) **Foreign Application Priority Data**

Jul. 13, 2015 (EM) 001437065-0001

(51) **LOC (10) Cl.** **28-03**

(52) **U.S. Cl.**
USPC **D28/18**

(58) **Field of Classification Search**
USPC ... D28/9, 10, 12, 13, 14, 15, 17, 18, 19, 20, D28/25, 28; D30/158, 159; 34/98
CPC A45D 20/00; A45D 20/04; A45D 20/08; A45D 20/10; A45D 20/12; A45D 20/122; A45D 20/14; A45D 20/124; A45D 20/26; A45D 20/16; A45D 2020/126; A45D 2020/128
See application file for complete search history.

(56) **References Cited**

U.S. PATENT DOCUMENTS

D422,114	S	*	3/2000	Gudefin	D28/13
D544,998	S	*	6/2007	Petruccelli	D28/13
D600,405	S	*	9/2009	Soresina	D28/13
D603,094	S	*	10/2009	Piard	D28/13
D616,164	S	*	5/2010	McLeod	D32/32
D655,038	S	*	2/2012	Petruccelli	D28/13
2005/0198854	A1	*	9/2005	Hobe	A45D 20/12 34/96
2010/0154150	A1	*	6/2010	McLeod	A47L 9/02 15/21.1
2012/0198644	A1	*	8/2012	Iles	A47L 9/04 15/179

FOREIGN PATENT DOCUMENTS

CA	2453796	A1 *	7/2004	A45D 20/122
CN	302763040	*	3/2014	
CN	302805218	*	4/2014	
CN	303361261	*	9/2015	

(Continued)

Primary Examiner — Catherine Tuttle
Assistant Examiner — Mary Malley
(74) *Attorney, Agent, or Firm* — Morrison & Foerster LLP

(57) **CLAIM**

We claim the ornamental design for an accessory for a hairdryer, as shown and described.

DESCRIPTION

FIG. **1** is a perspective view of an accessory for a hairdryer showing our new design;
FIG. **2** is a front view thereof;
FIG. **3** is rear view thereof;
FIG. **4** is a side view thereof;
FIG. **5** is a side view of the opposite side of FIG. **4**;
FIG. **6** is a top view thereof; and,
FIG. **7** is a bottom view thereof.
The broken lines are included for the purpose of illustrating portions of an accessory for a hairdryer that form no part of the claimed design.

1 Claim, 7 Drawing Sheets

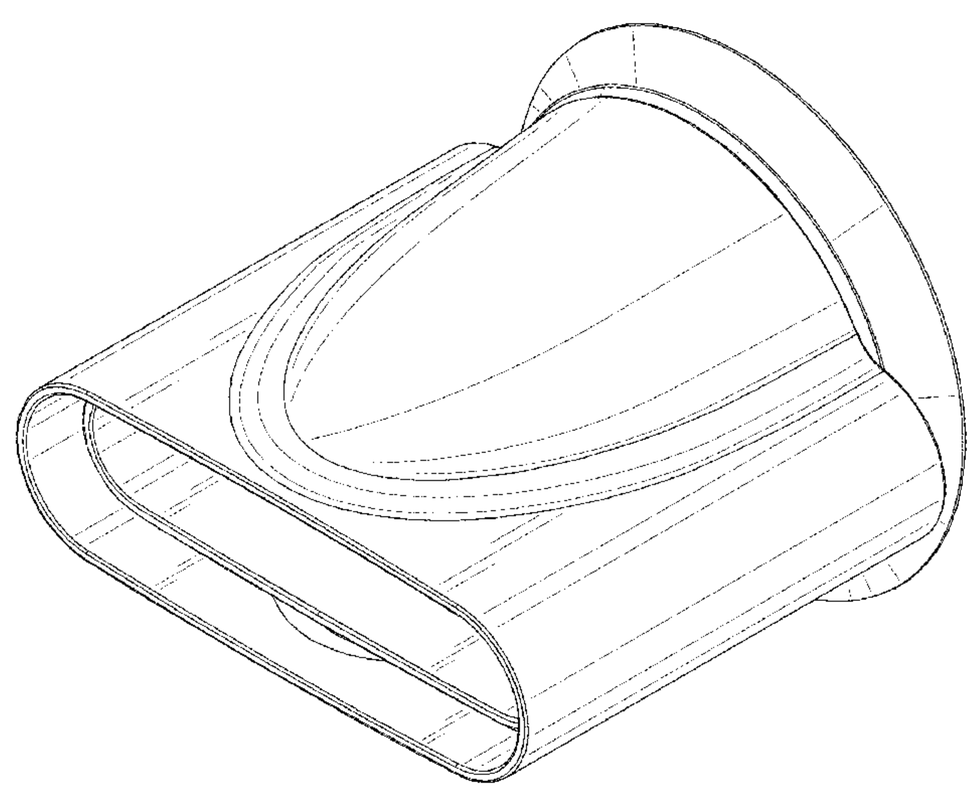

(56) **References Cited**

FOREIGN PATENT DOCUMENTS

CN	303545036		*	1/2016	
DE	4218857	C1	*	4/1993	..... A45D 20/122
WO	WO 2007105069	A2	*	9/2007	..... A45D 20/122

* cited by examiner

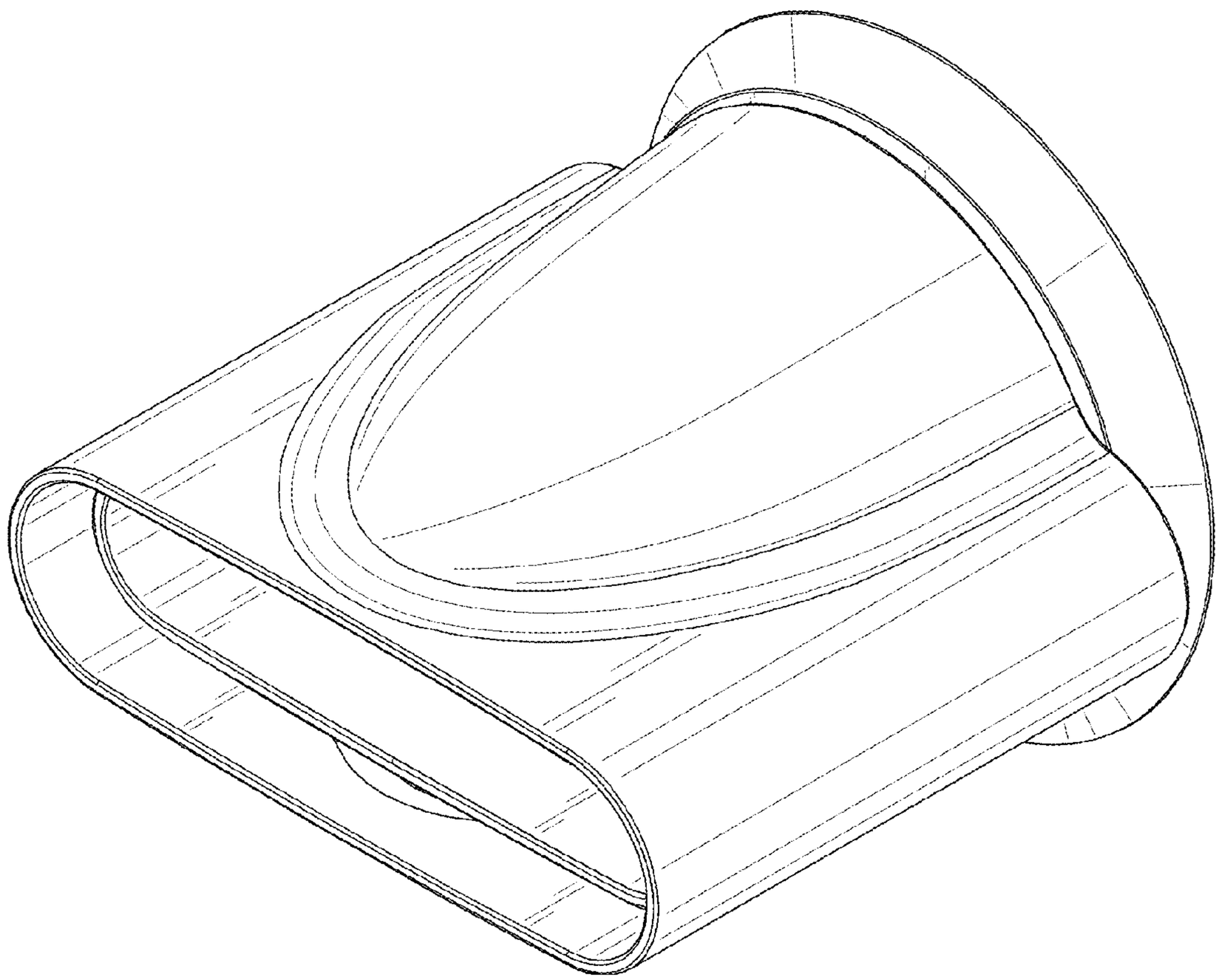

FIG. 1

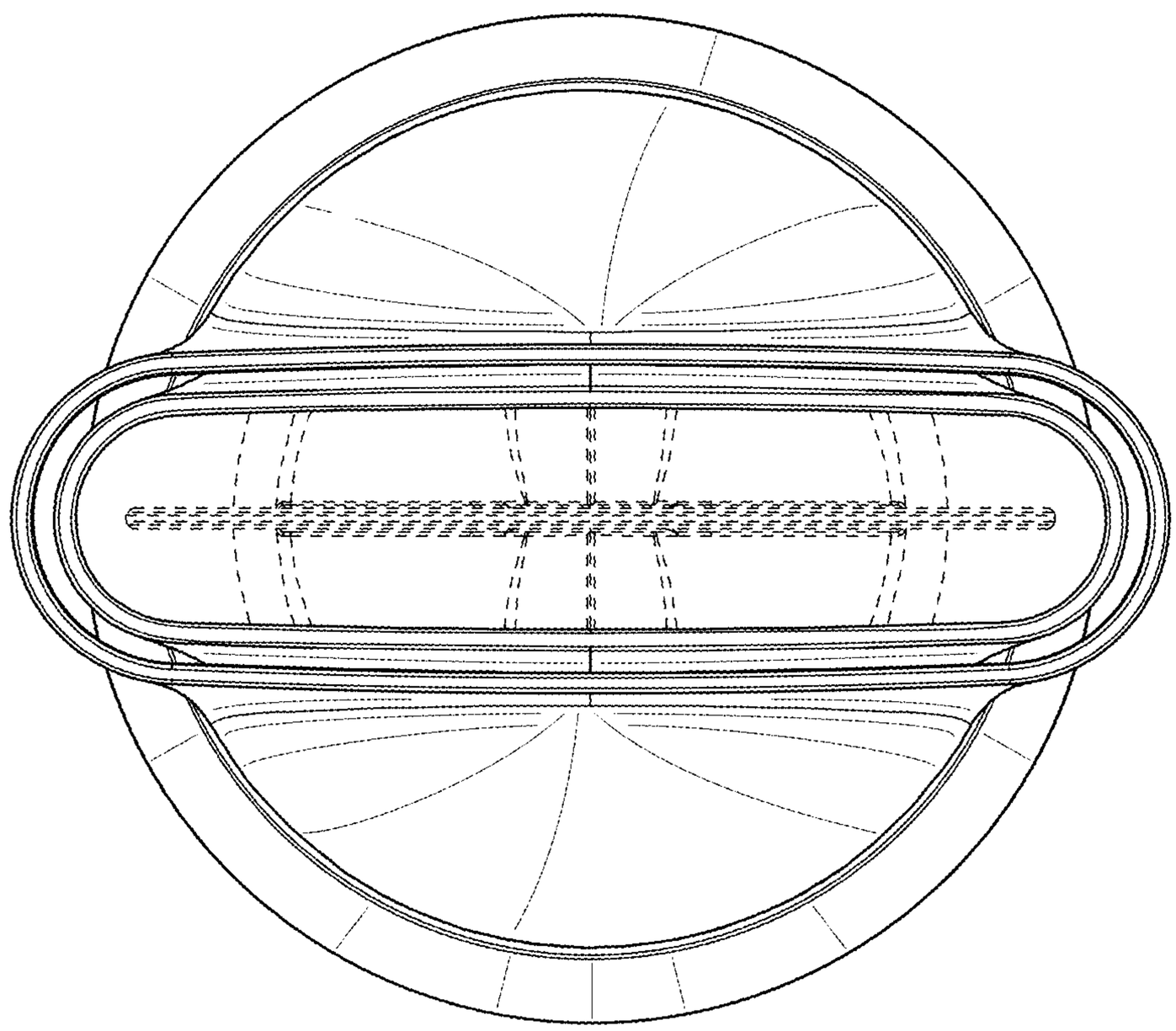

FIG. 2

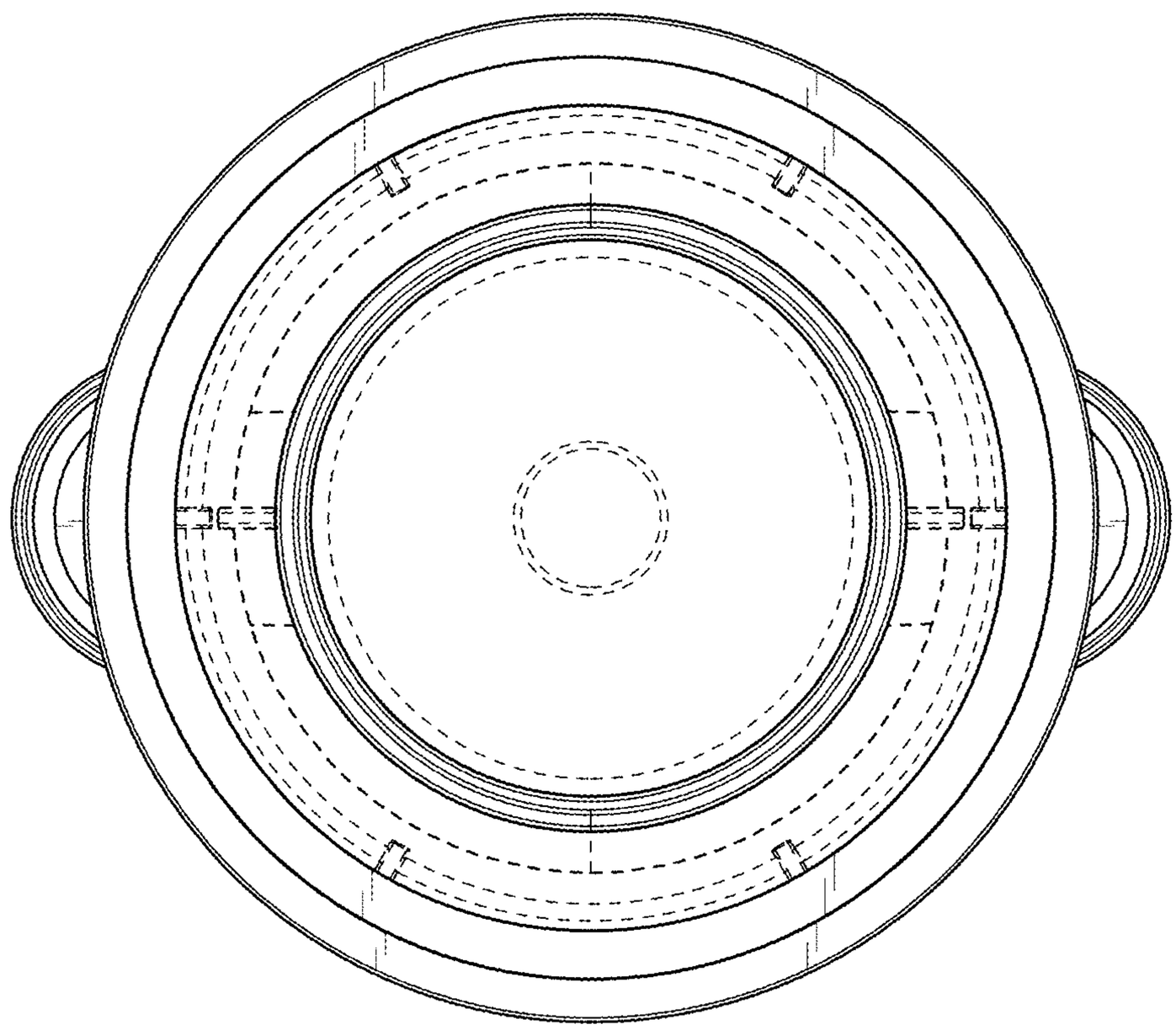

FIG. 3

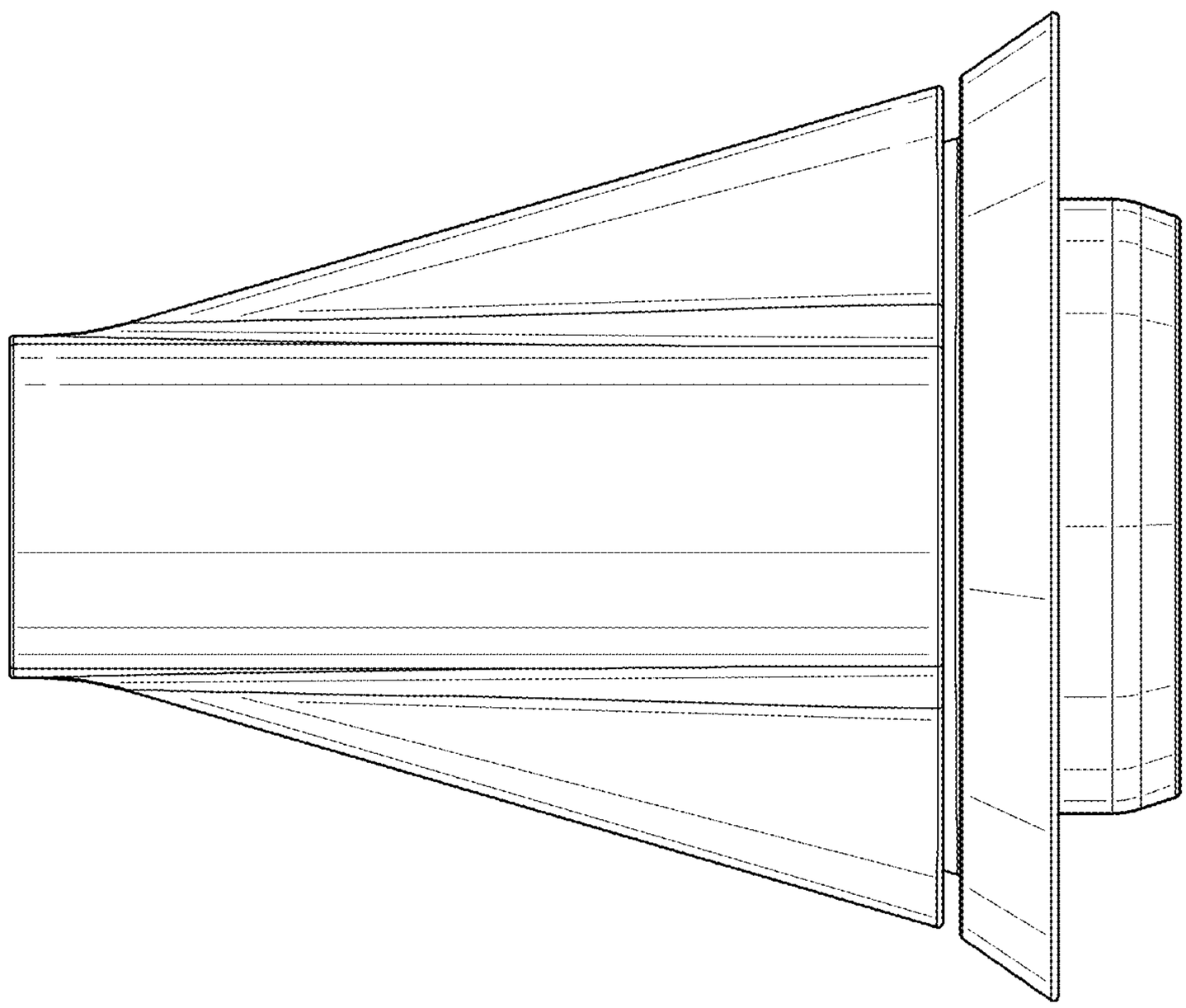

FIG. 4

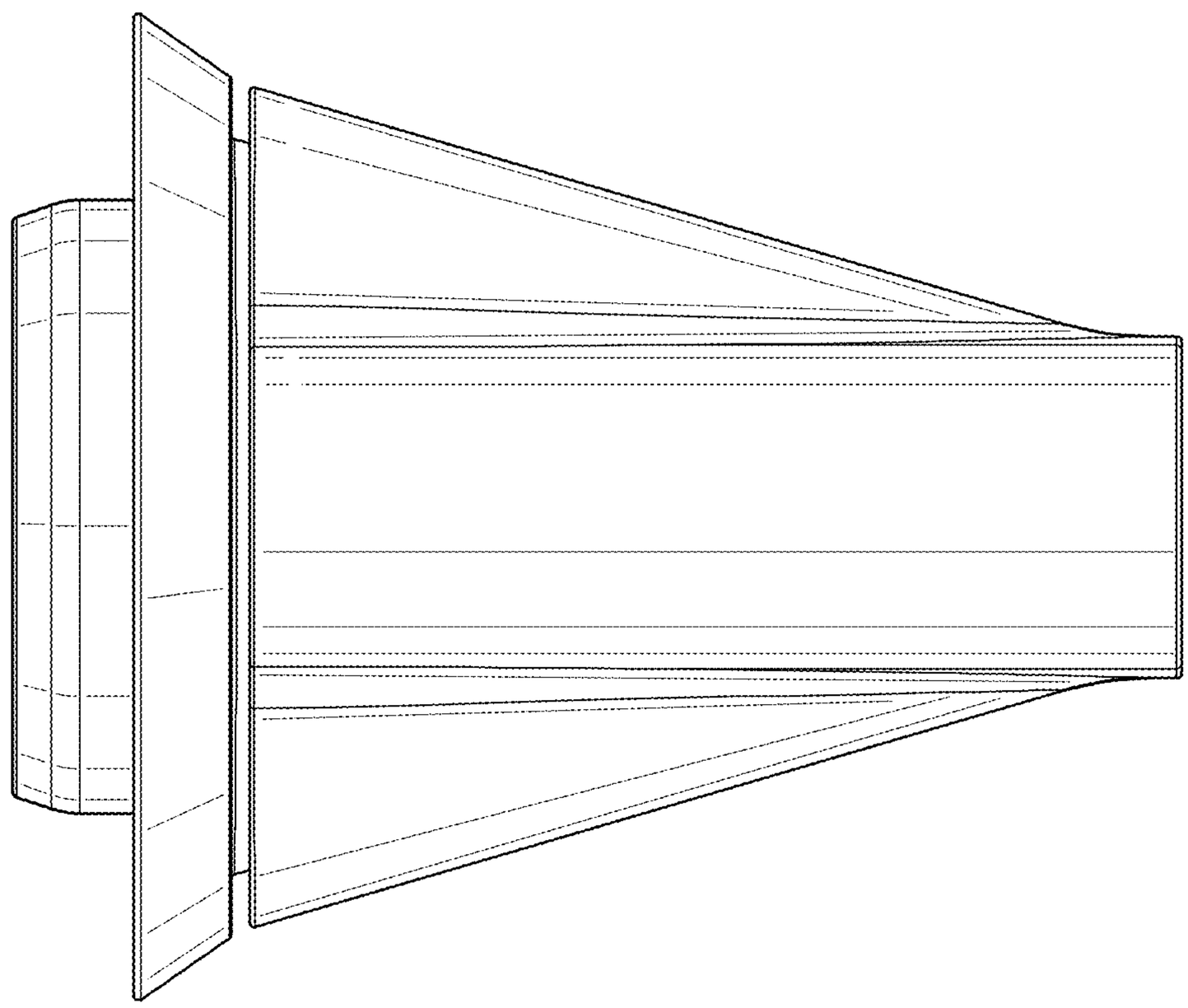

FIG. 5

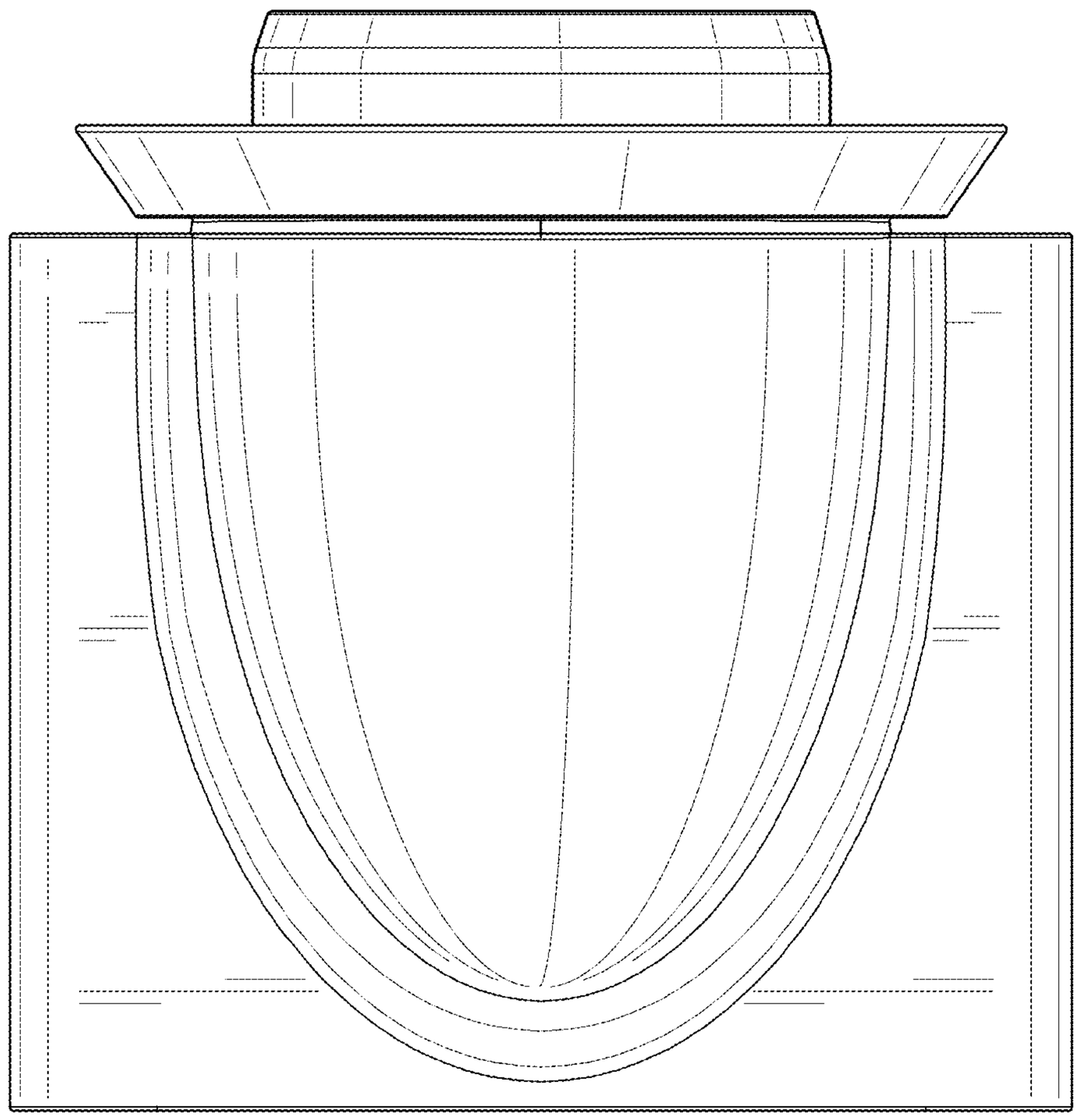

FIG. 6

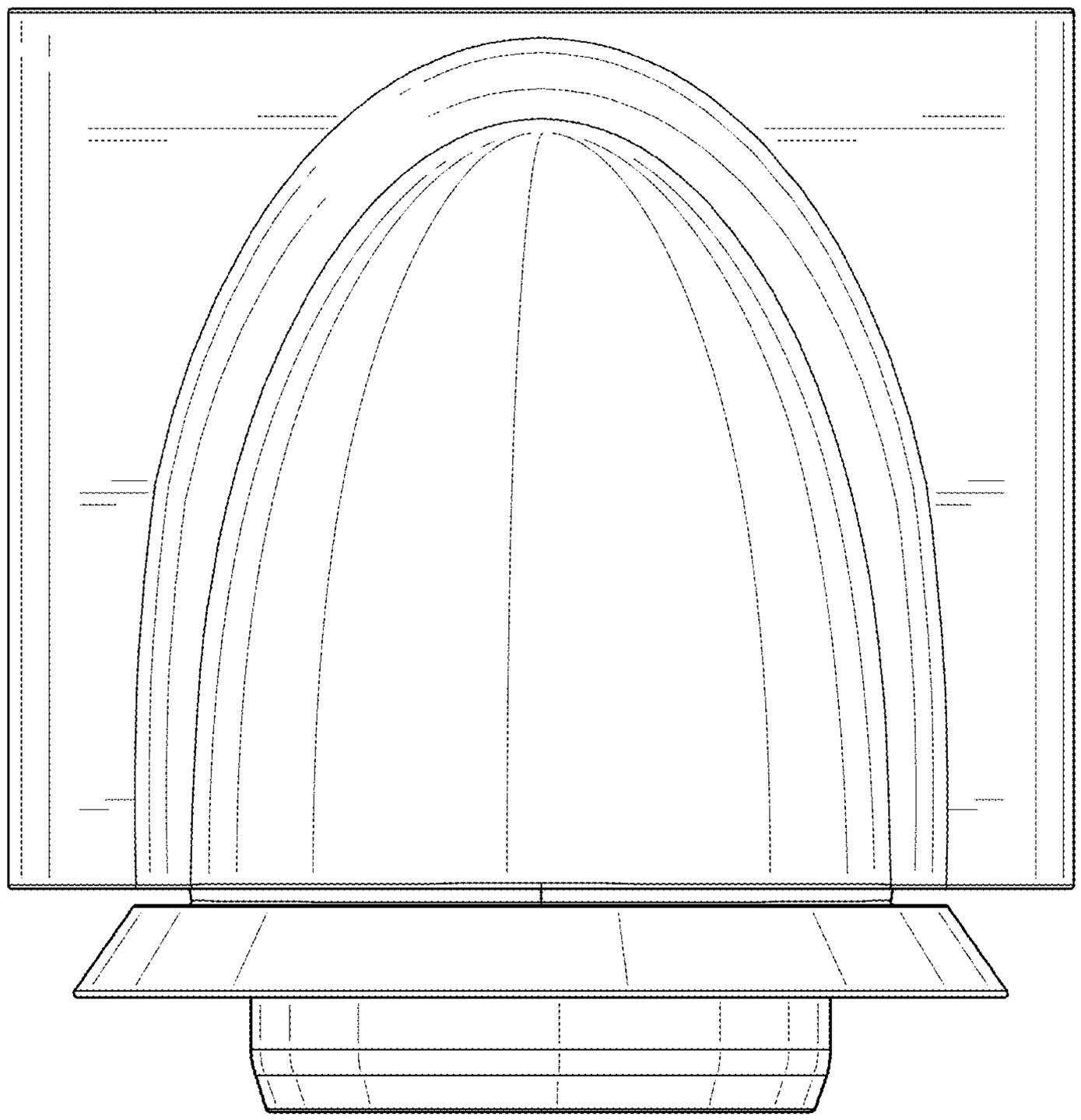

FIG. 7