US00D784923S

(12) United States Design Patent

Song

(10) Patent No.: US D784,923 S
(45) Date of Patent: ** Apr. 25, 2017

(54) **AUTOMOTIVE WIRELESS CHARGING CRADLE**

(71) Applicant: **CPC Co., Ltd.**, Hwaseong-si, Gyeonggi-do (KR)

(72) Inventor: **Soon Young Song**, Anyang-si (KR)

(73) Assignee: **CPC CO., LTD.**, Gyeonggi-Do (KR)

(**) Term: **15 Years**

(21) Appl. No.: **29/539,865**

(22) Filed: **Sep. 18, 2015**

(51) **LOC (10) Cl.** **13-02**

(52) **U.S. Cl.**
USPC **D13/108**; D14/253

(58) **Field of Classification Search**
USPC D13/102–110, 118, 119, 184, 199; D14/356, 432, 140, 447, 251, 253
CPC Y02E 60/12; H02J 7/025; H02J 7/0042; H02J 7/0044; H02J 7/0045; H02J 7/0003; Y02T 90/14; Y02T 90/122; Y02T 90/128; Y02T 90/163; H01F 38/14; H01R 13/6675; H01M 2/1022; H01M 2/1055; H01M 10/44; H01M 10/46; H01M 10/425; B60L 11/182
See application file for complete search history.

(56) **References Cited**

U.S. PATENT DOCUMENTS

D431,250 S * 9/2000 Richter D14/447
D456,024 S * 4/2002 Richter D14/434
D521,990 S * 5/2006 Richter D14/253
D529,905 S * 10/2006 Richter D14/253
D530,713 S * 10/2006 Richter D14/253
D684,980 S * 6/2013 Chun D14/447
D685,379 S * 7/2013 Richter D14/253
D685,380 S * 7/2013 Richter D14/253
D732,013 S * 6/2015 Aspinall D14/253
D750,612 S * 3/2016 Chen D14/253
D766,908 S * 9/2016 Richter D14/447
2007/0284500 A1* 12/2007 Fan B60R 11/02 248/346.06
2010/0294818 A1* 11/2010 LaFargue B60R 11/0241 224/400

* cited by examiner

Primary Examiner — Rosemary K Tarcza
Assistant Examiner — Alison Ofstun
(74) *Attorney, Agent, or Firm* — Revolution IP, PLLC

(57) **CLAIM**

The ornamental design for an "automotive wireless charging cradle," as shown and described.

DESCRIPTION

FIG. **1** is a perspective view of automotive wireless charging cradle showing my new design;
FIG. **2** is a front view thereof;
FIG. **3** is a rear view thereof;
FIG. **4** is a left side view thereof;
FIG. **5** is a right side view thereof;
FIG. **6** is a top view thereof;
FIG. **7** is a bottom view thereof;
FIG. **8** is a rear perspective view thereof;
FIG. **9** is a perspective view of the automotive wireless charging cradle being placed upside down; and,
FIG. **10** is a rear perspective view of the automotive wireless charging cradle being placed upside down.

1 Claim, 10 Drawing Sheets

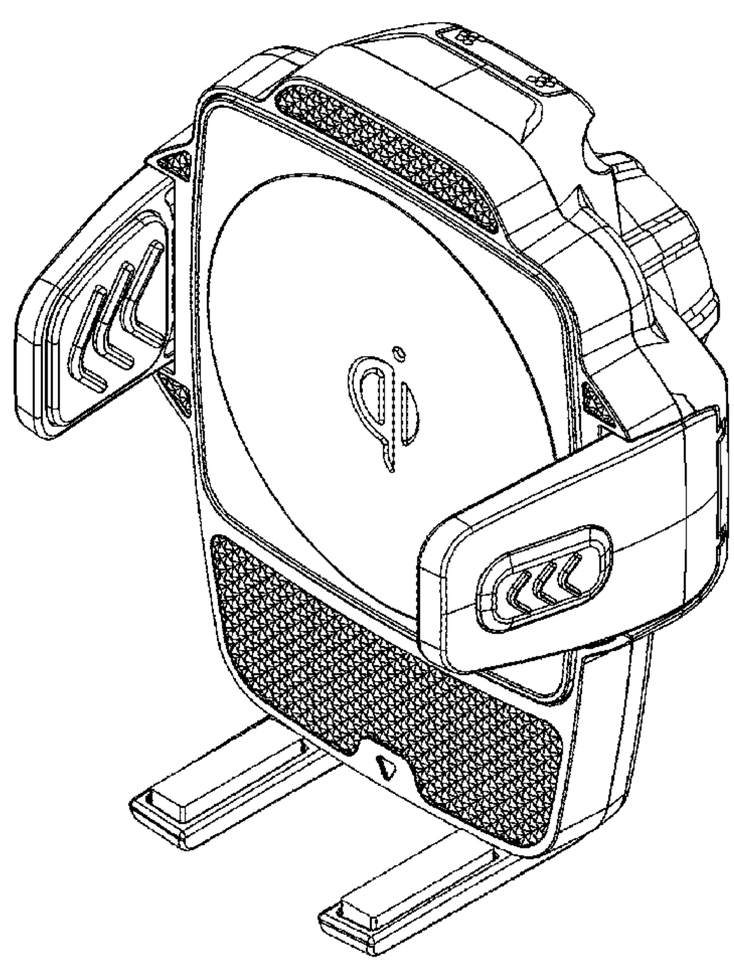

FIG. 1

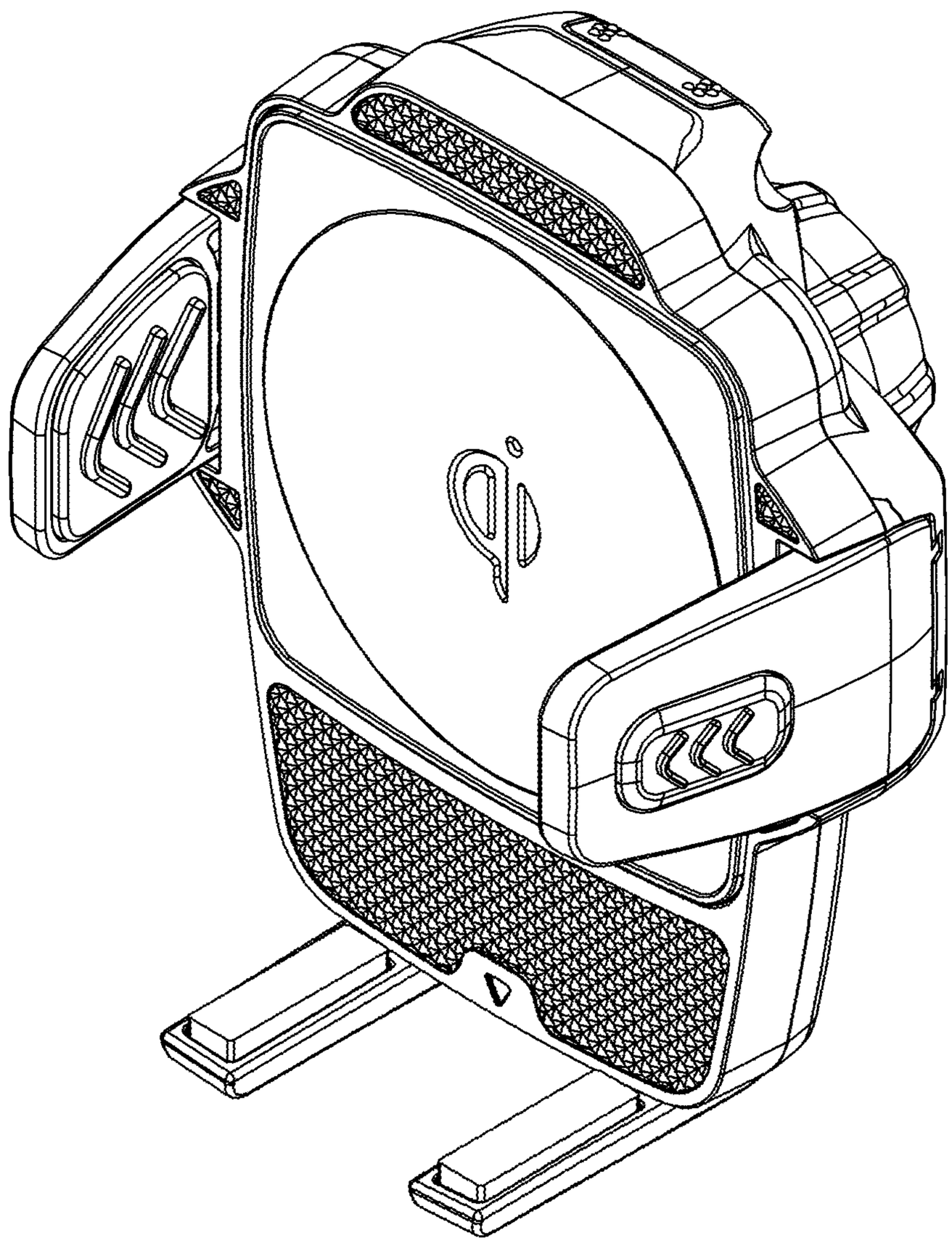

FIG. 2

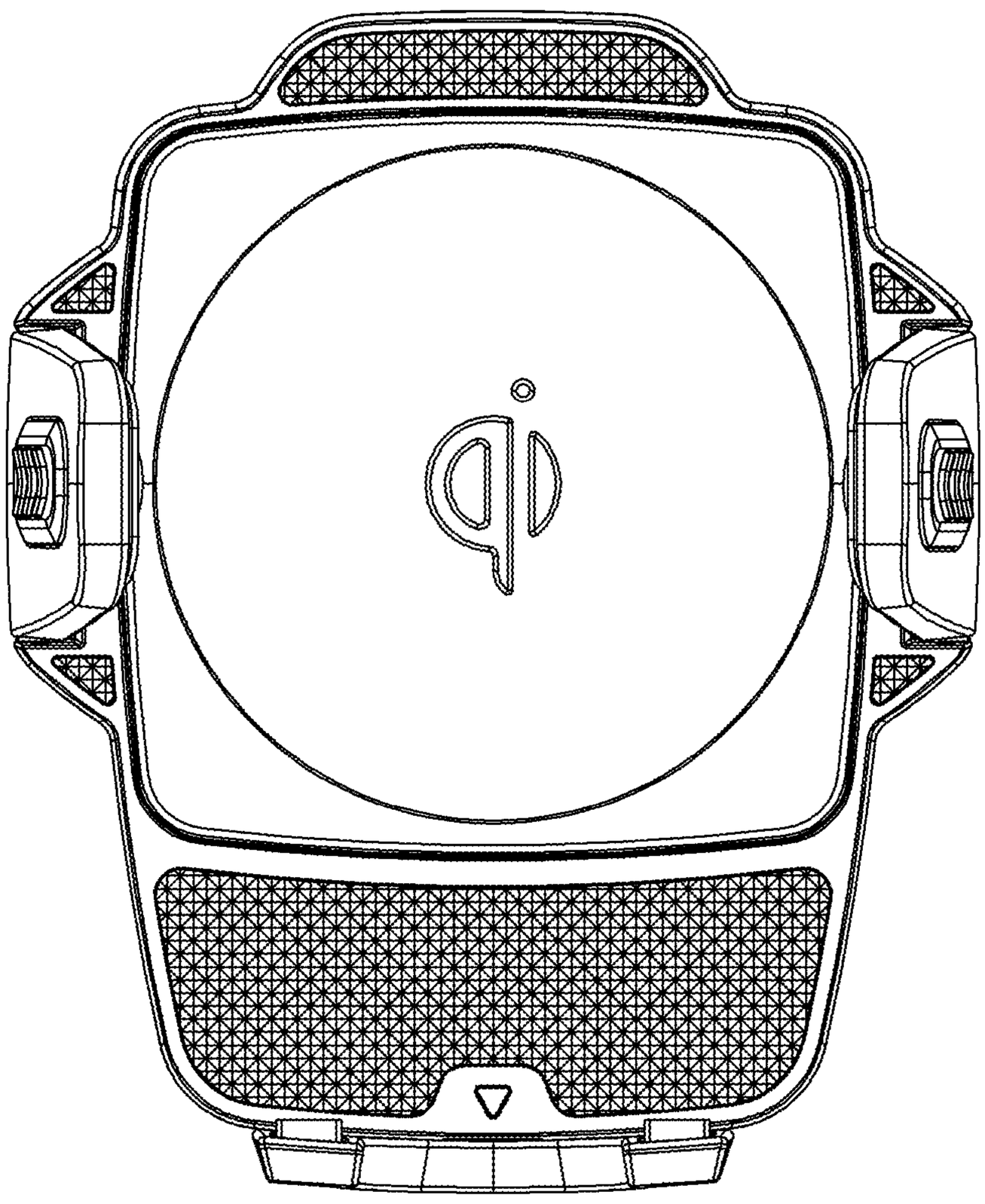

FIG. 3

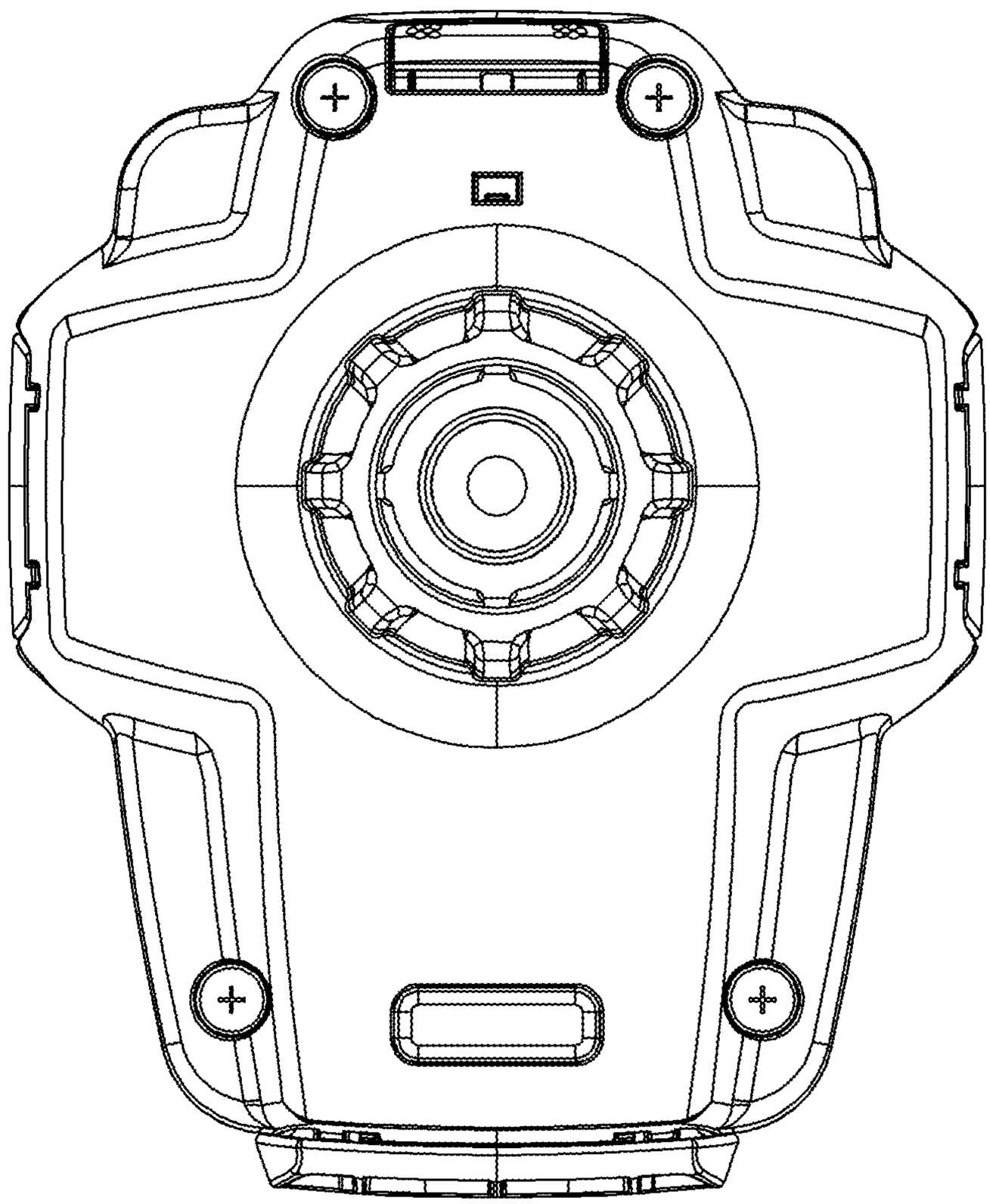

FIG. 4

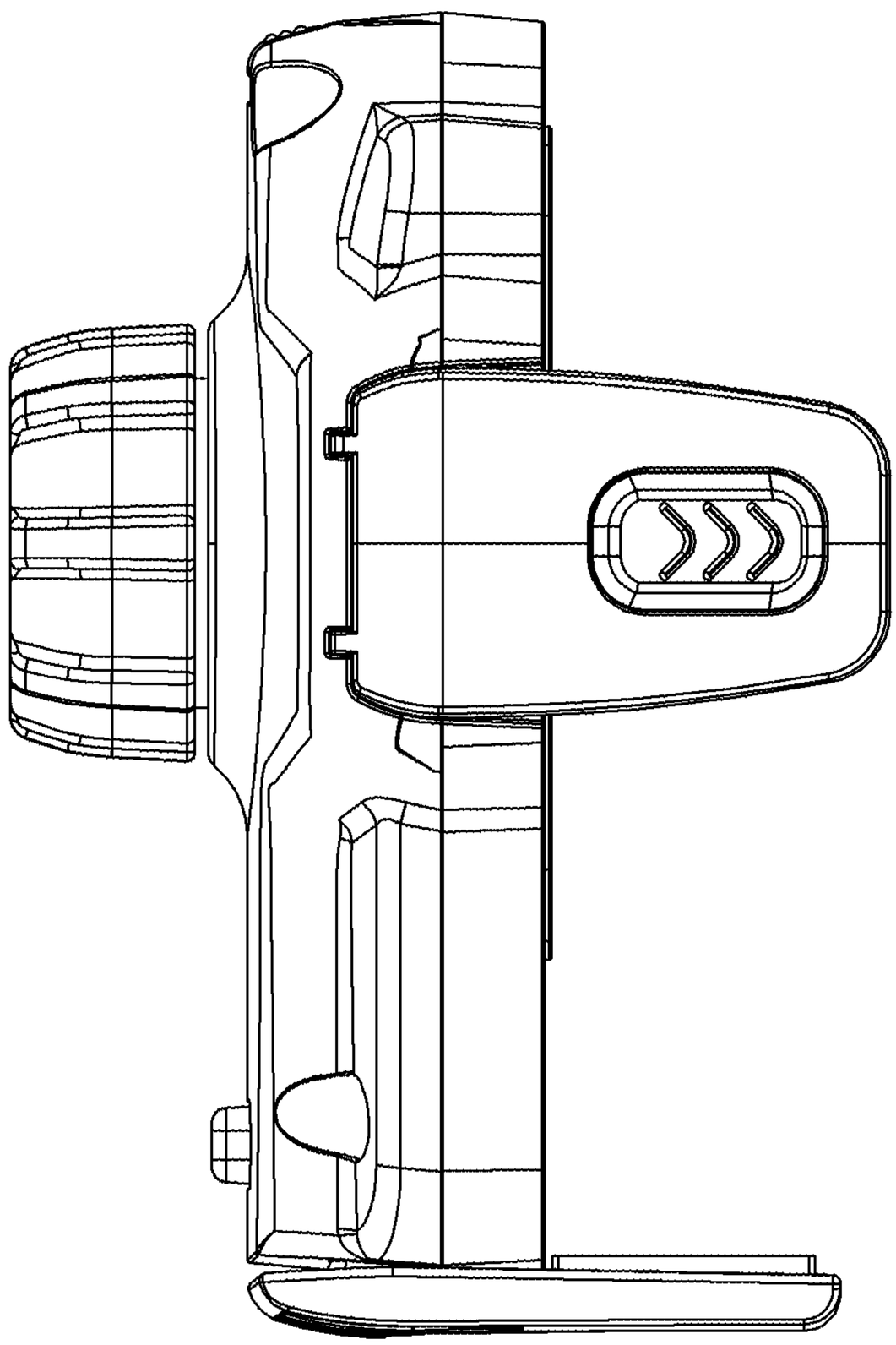

FIG. 5

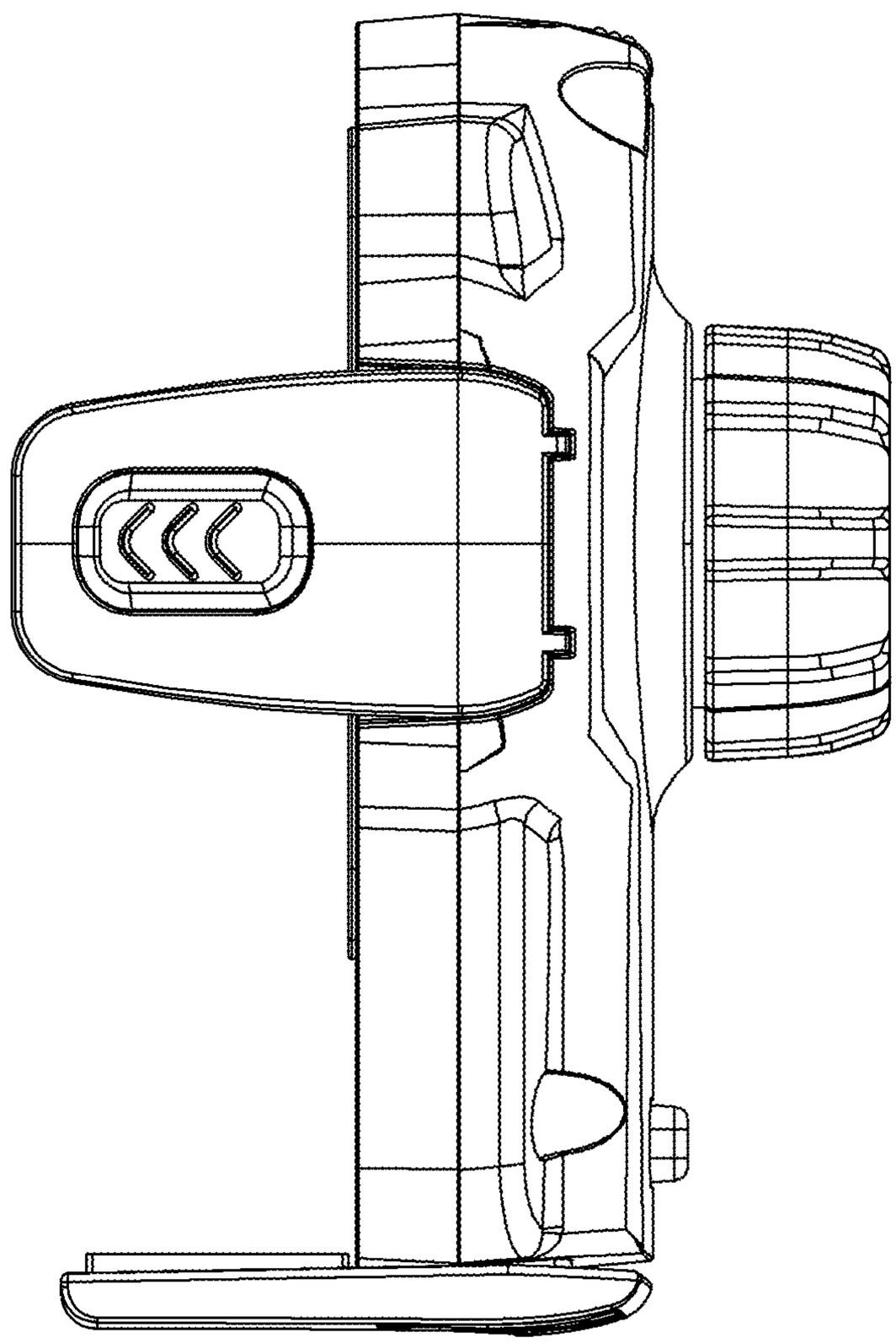

FIG. 6

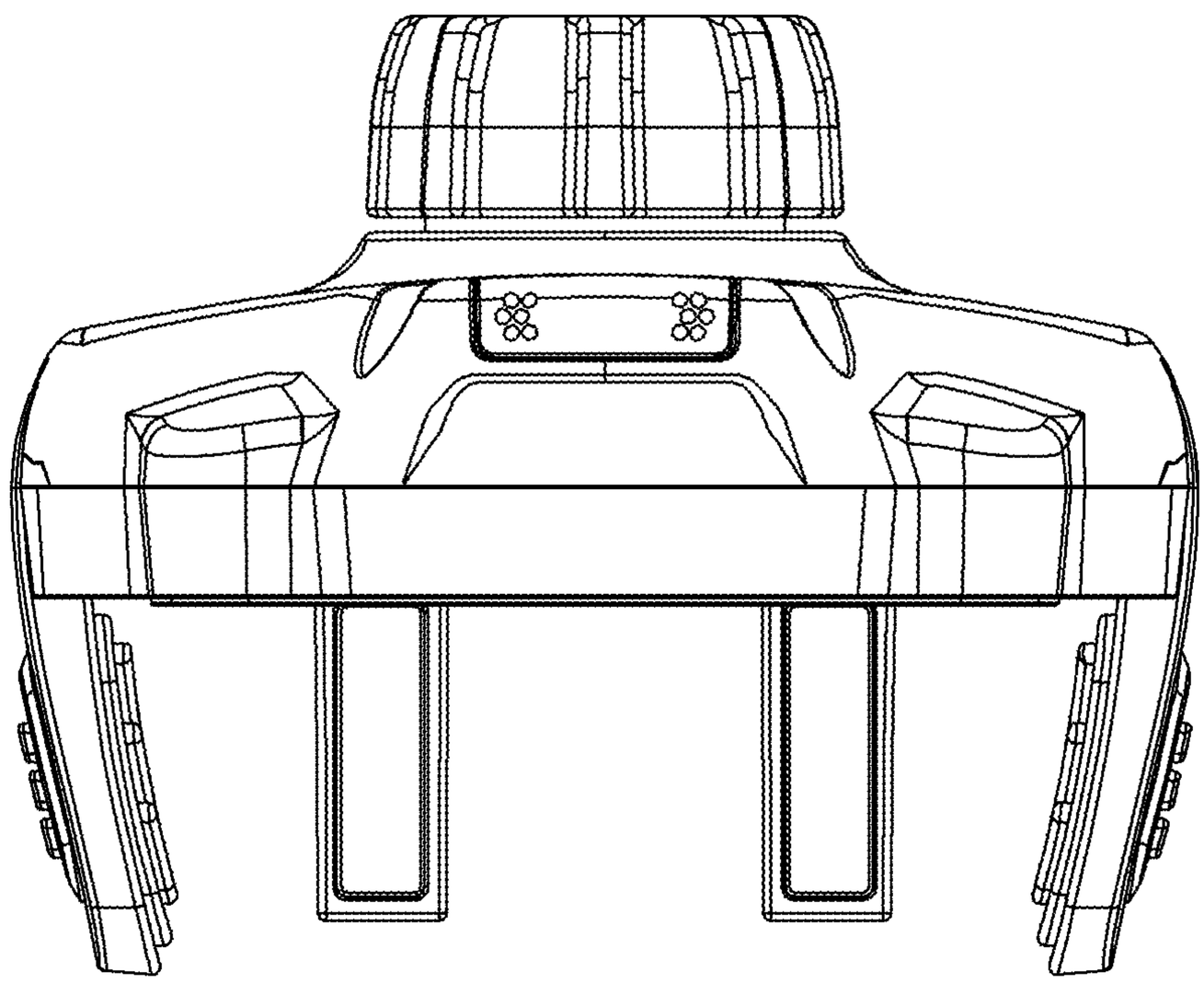

FIG. 7

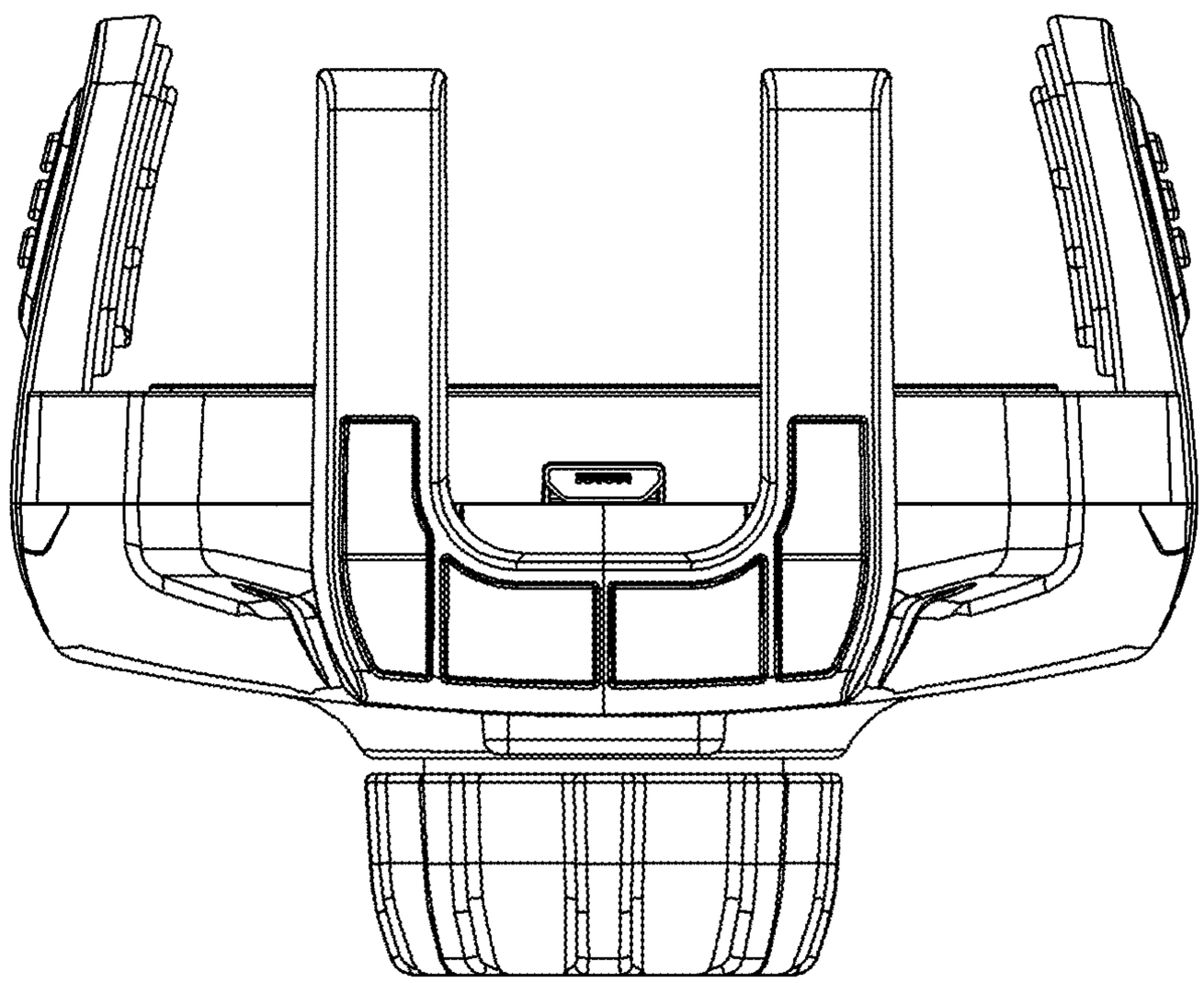

FIG. 8

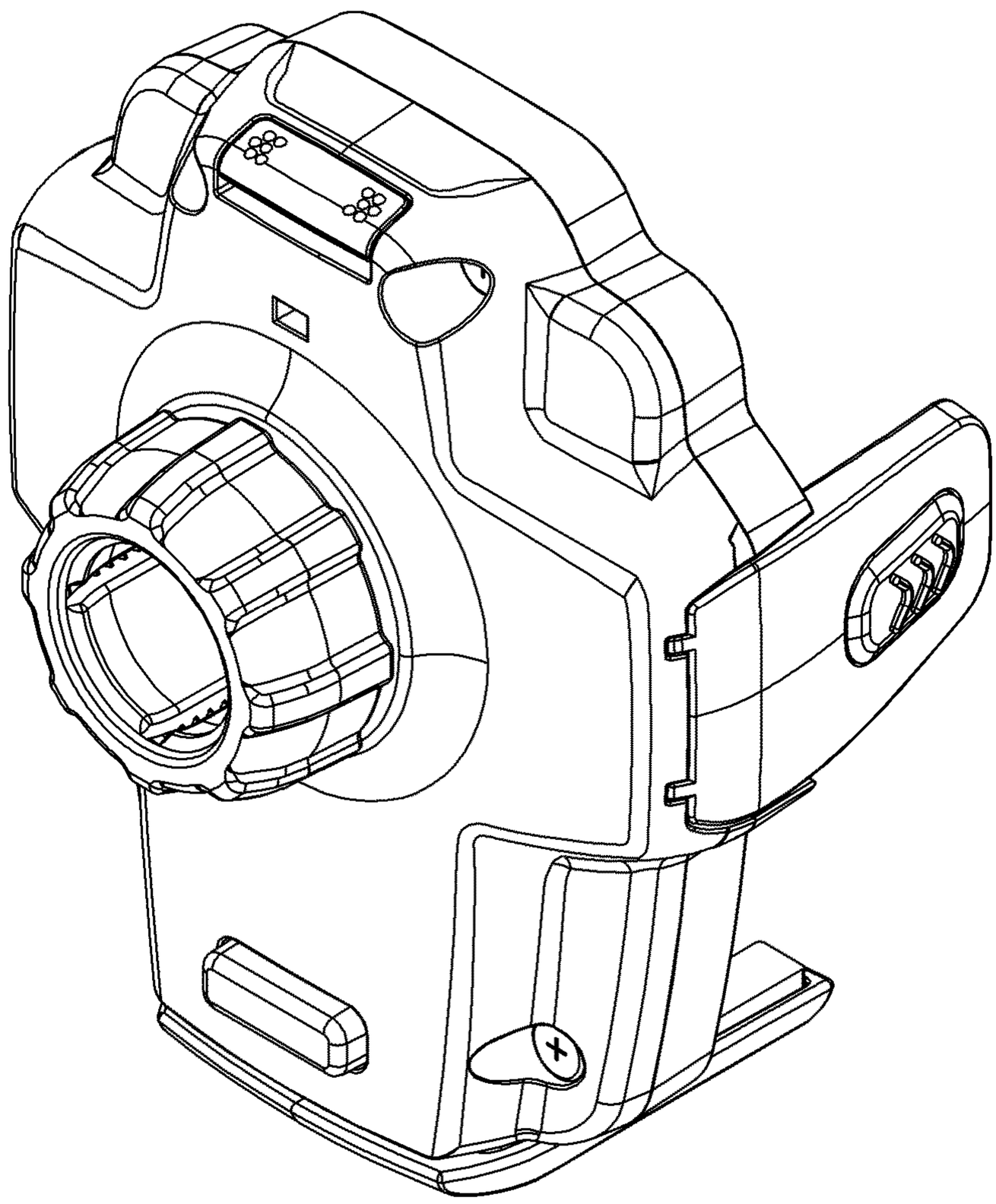

FIG. 9

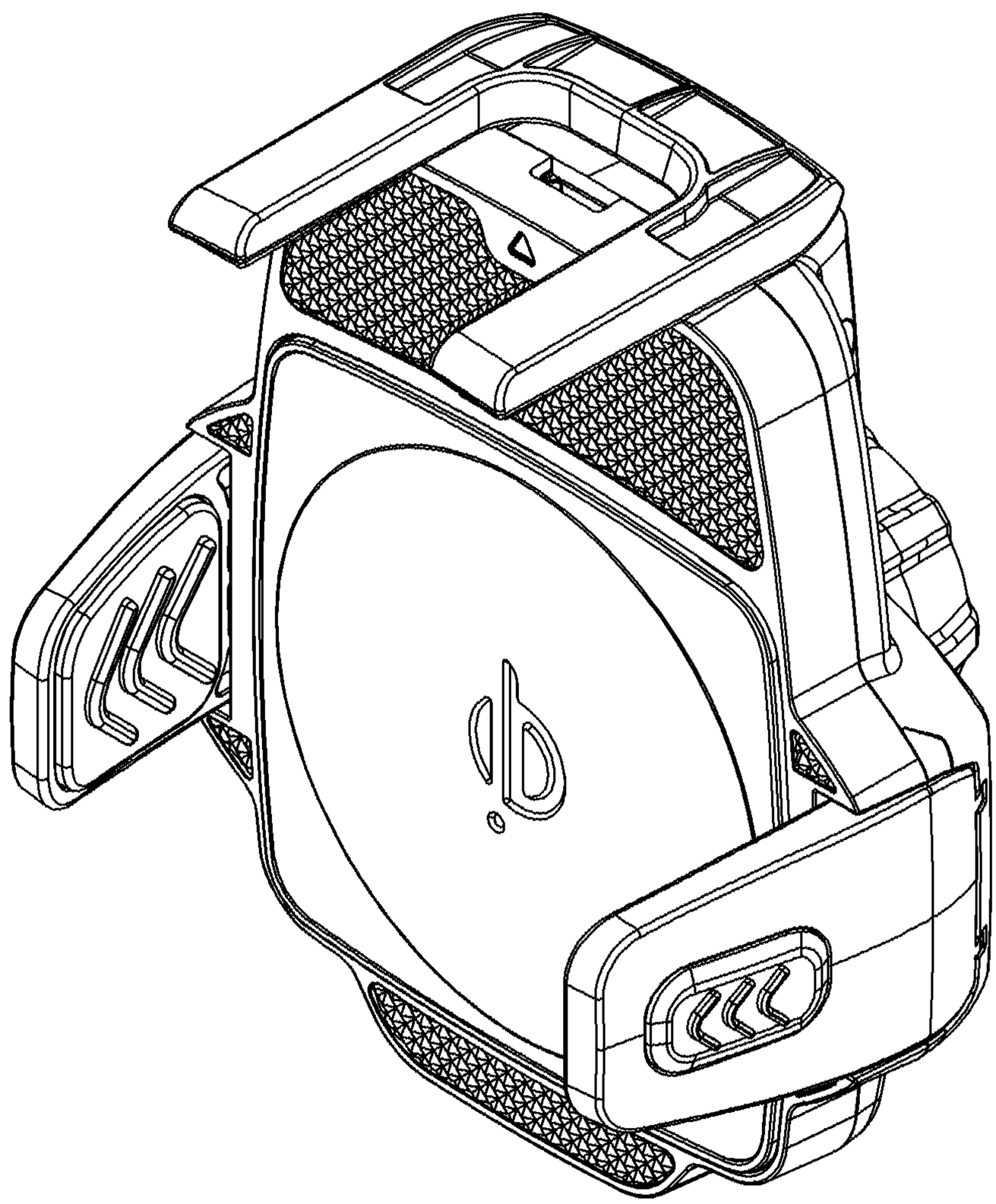
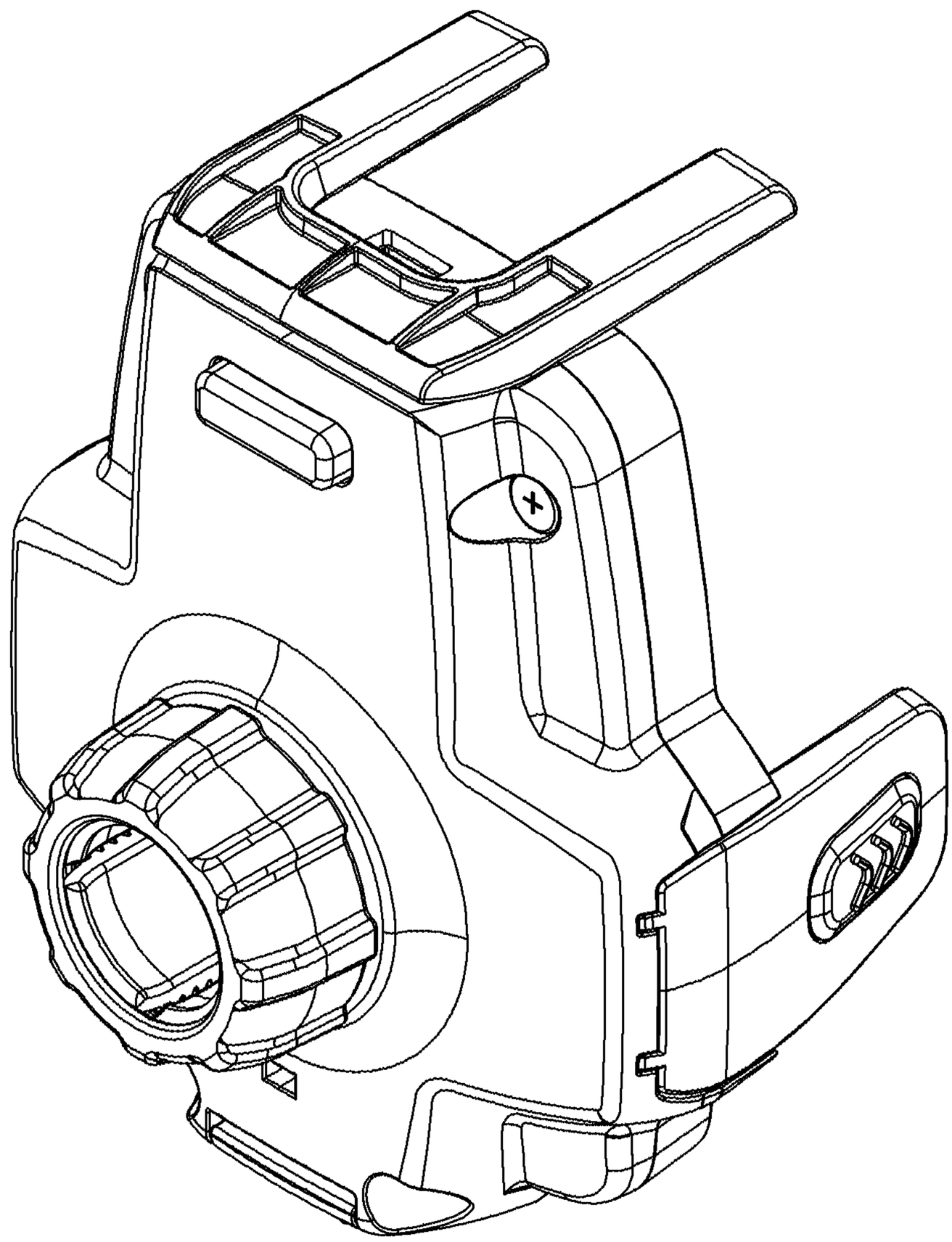
FIG. 10