US00D784247S

(12) United States Design Patent

Zhu et al.

(10) Patent No.: US D784,247 S
(45) Date of Patent: ** Apr. 18, 2017

(54) **TIRE TREAD**

(71) Applicants: **COMPAGNIE GENERALE DES ETABLISSEMENTS MICHELIN**, Clermont-Ferrand (FR); **MICHELIN RECHERCHE et TECHNIQUE S.A.**, Granges-Paccot (CH)

(72) Inventors: **Fang Zhu**, Greer, SC (US); **Praveen-Kumar Verma**, Gurgaon (IN); **Kai Chun Yang**, McLean, VA (US); **Lee Montgomery**, Piedmont, SC (US); **Jeremy Trowbridge**, Greenville, SC (US)

(73) Assignees: **Compagnie Generale des Etablissements Michelin**, Clermont Ferrand (FR); **Michelin Recherche et Technique S.A.**, Granges-Paccot (CH)

(**) Term: **14 Years**

(21) Appl. No.: **29/525,391**

(22) Filed: **Apr. 29, 2015**

(51) **LOC (10) Cl.** **12-15**

(52) **U.S. Cl.**
USPC **D12/553**

(58) **Field of Classification Search**
USPC D12/533–567
CPC B60C 1/0016; B60C 11/0306; B60C 11/0302; B60C 3/06; B60C 9/17
See application file for complete search history.

(56) **References Cited**

U.S. PATENT DOCUMENTS

D355,151	S	*	2/1995	Hagmaier	D12/562
D374,200	S	*	10/1996	Kinoshita	D12/555
D385,234	S	*	10/1997	Young	D12/553
D388,370	S	*	12/1997	Young	D12/562
D414,446	S		9/1999	Kemp, Jr.	
D423,419	S	*	4/2000	Kemp, Jr.	D12/553
D506,722	S	*	6/2005	Nonaka	D12/553
D533,498	S	*	12/2006	Scheuren	D12/553
D534,858	S	*	1/2007	Le	D12/553
D555,078	S		11/2007	Radulescu et al.	
D604,226	S	*	11/2009	Scheuren	D12/553
D662,873	S	*	7/2012	Felder	D12/553
D668,206	S		10/2012	Moore et al.	

(Continued)

FOREIGN PATENT DOCUMENTS

EP 2 570 272 A1 3/2013

OTHER PUBLICATIONS

X Multi Energy D, Michelin Tire, www.michelinman.com, at least as early as Jan. 20, 2015, 2 pages.

(Continued)

Primary Examiner — Robert M Spear
Assistant Examiner — John Voytek
(74) *Attorney, Agent, or Firm* — Dority & Manning, P.A.

(57) **CLAIM**

The ornamental design for a tire tread, as shown and described.

DESCRIPTION

FIG. **1** is a perspective view of a tire tread showing our new design, it being understood that the tread pattern repeats circumferentially throughout the outer circumference and shoulder of the tire, the opposite side perspective being identical thereto;
FIG. **2** is a front elevation view thereof;
FIG. **3** is a side elevation view of the right side; the left side being identical thereto; and,
FIG. **4** is a cross-sectional view taken along line A-A of FIG. **2**.
In the drawings, the broken line disclosure of the tire sidewall and inner bead depicts environmental structure and forms no part of the claimed design.

1 Claim, 4 Drawing Sheets

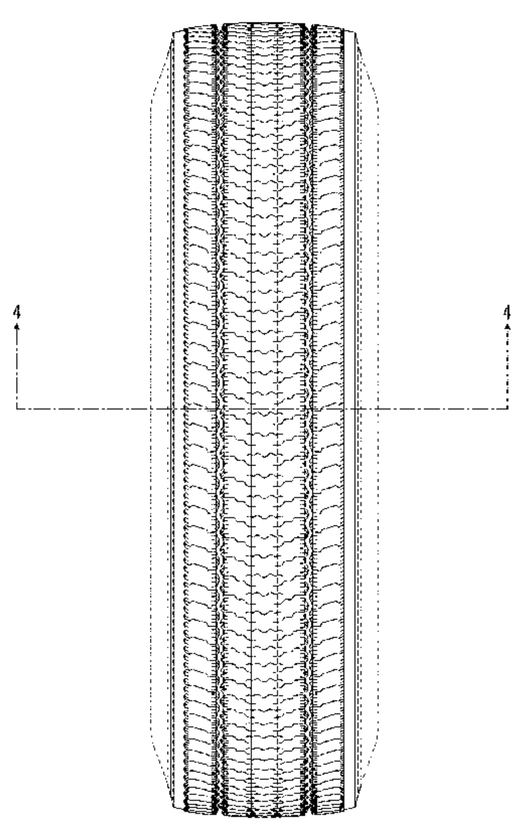

(56) **References Cited**

U.S. PATENT DOCUMENTS

D712,342 S		9/2014	Zhu et al.	
D721,643 S		1/2015	Barrett et al.	
D735,640 S	*	8/2015	Vandaele	D12/553
D750,013 S	*	2/2016	Houis	D12/553

OTHER PUBLICATIONS

Previously filed design U.S. Appl. No. 29/472,396, filed Nov. 12, 2013.
Previously filed design U.S. Appl. No. 29/472,404, filed Nov. 12, 2013.

* cited by examiner

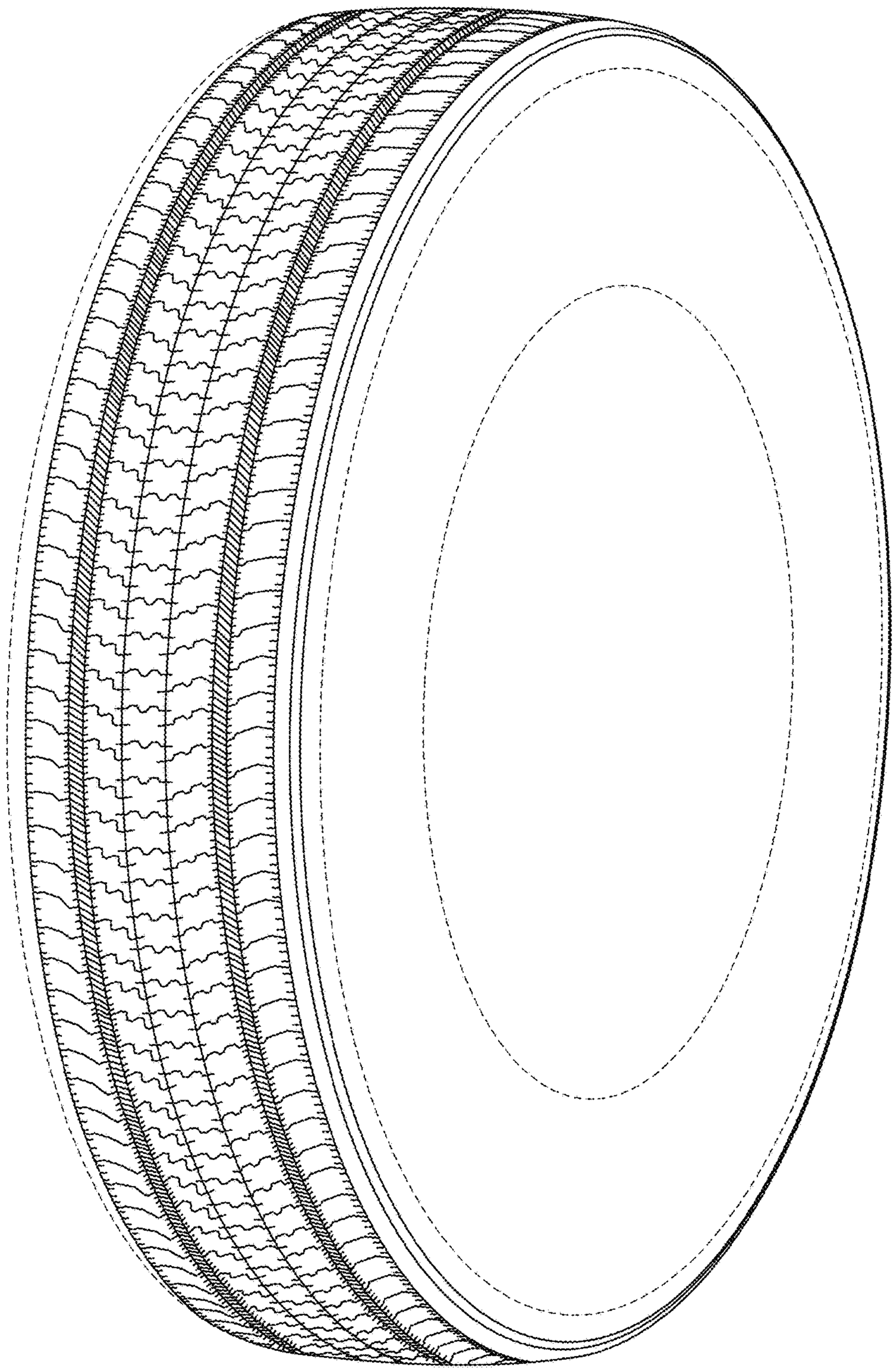

FIG. 1

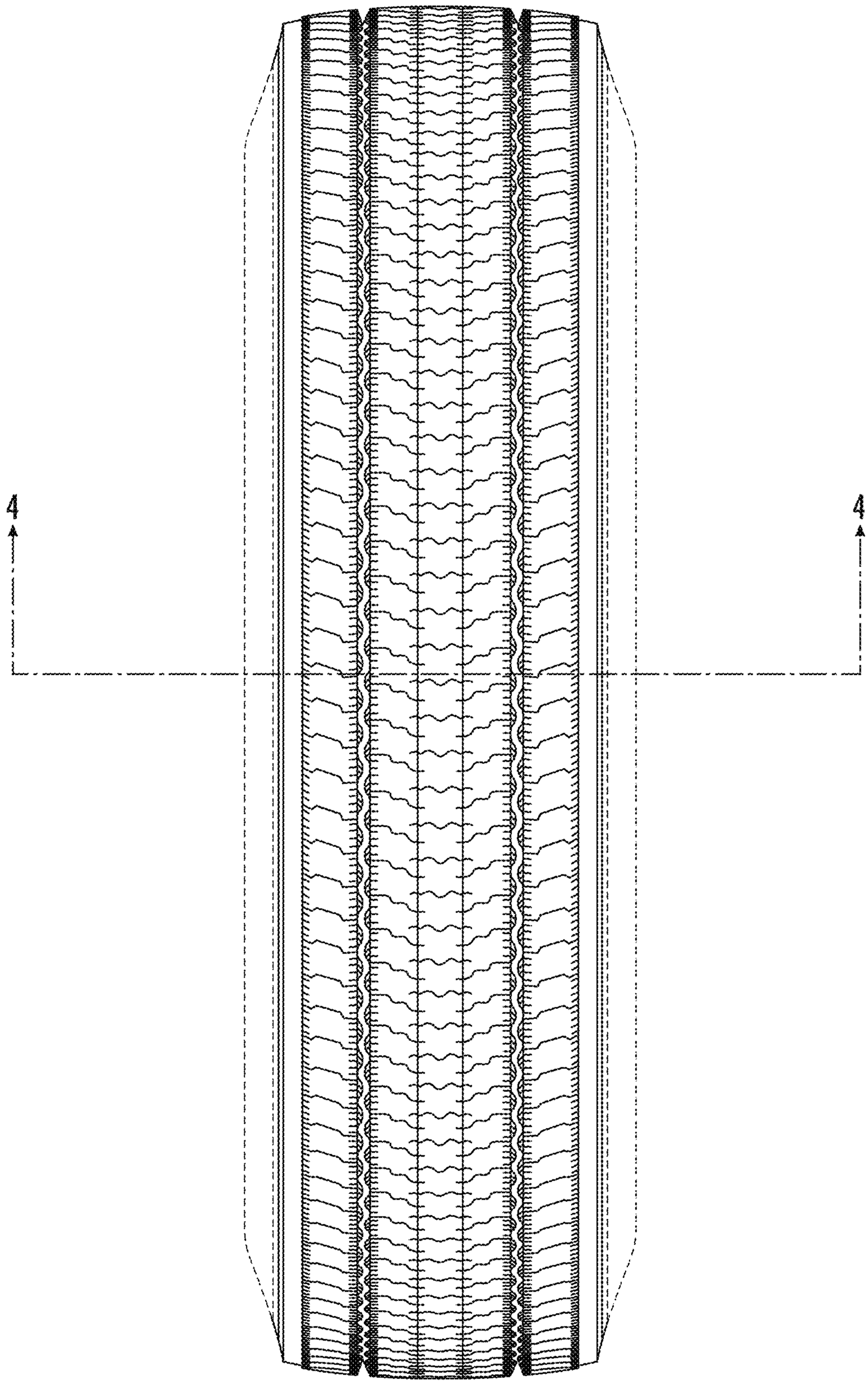

FIG. 2

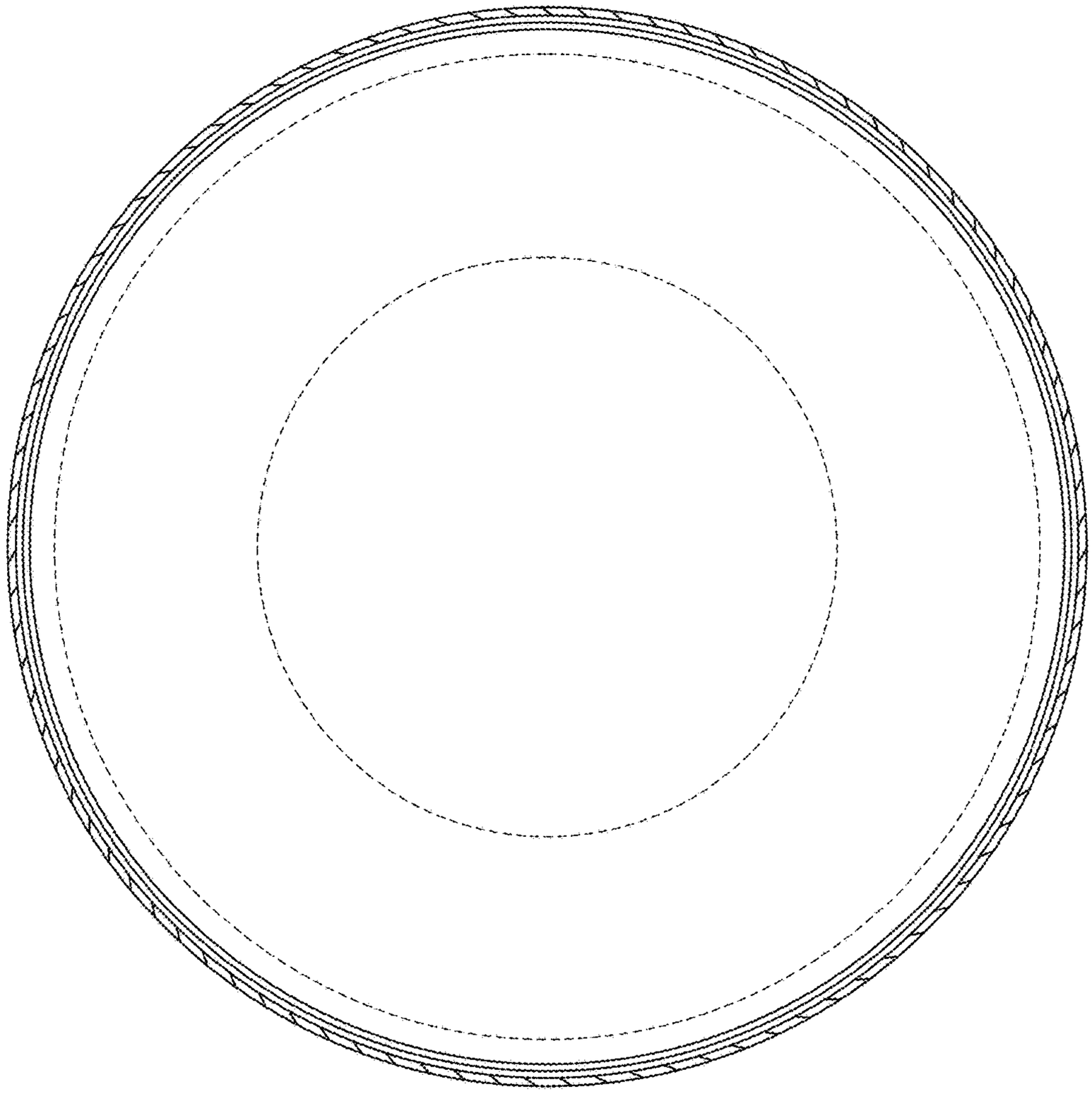

FIG. 3

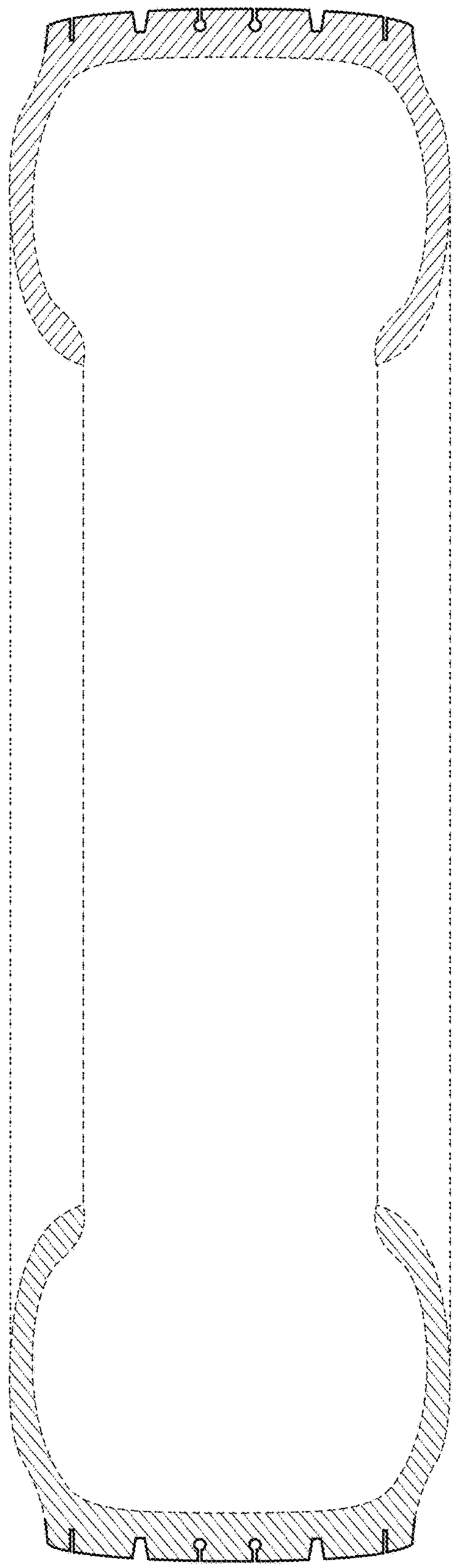

FIG. 4