US00D783092S

(12) United States Design Patent
To

(10) Patent No.: US D783,092 S
(45) Date of Patent: ** Apr. 4, 2017

(54) **RING MECHANISM HAVING ELLIPTICAL CROSS SECTIONAL RING MEMBERS**

(71) Applicant: **World Wide Stationery Mfg. Co., Ltd.**, Hong Kong (CN)

(72) Inventor: **Chun Yuen To**, Hong Kong (CN)

(73) Assignee: **World Wide Stationery Mfg. Co., Ltd.**, Kwai Chung, New Territories (HK)

(**) Term: **14 Years**

(21) Appl. No.: **29/512,928**

(22) Filed: **Dec. 23, 2014**

Related U.S. Application Data

(62) Division of application No. 29/435,328, filed on Oct. 23, 2012, now Pat. No. Des. 735,808.

(30) **Foreign Application Priority Data**

Apr. 23, 2012 (CN) 2012 3 0125299

(51) **LOC (10) Cl.** **19-04**

(52) **U.S. Cl.**
USPC **D19/32**

(58) **Field of Classification Search**
USPC D19/26, 27, 28, 32, 100, 199, 202, 203
(Continued)

(56) **References Cited**

U.S. PATENT DOCUMENTS

692,584 A 2/1902 Adams et al.
836,127 A 11/1906 Morden
(Continued)

FOREIGN PATENT DOCUMENTS

FR 2221924 A5 10/1974
GB 868724 A 5/1961
GB 2292343 A 2/1996

OTHER PUBLICATIONS

Office Action dated Jan. 30, 2015 in U.S. Appl. No. 29/435,328, 6 pages.
(Continued)

Primary Examiner — Sandra Snapp
Assistant Examiner — Ieisha Price
(74) *Attorney, Agent, or Firm* — Senniger Powers LLP

(57) **CLAIM**

The ornamental design for a ring mechanism having elliptical cross sectional ring members, as shown and described.

DESCRIPTION

FIG. **1** is a perspective view of the first embodiment of a ring mechanism having elliptical cross sectional ring members showing my design;
FIG. **2** is a front elevation view of the ring mechanism having elliptical cross sectional ring members of FIG. **1**, with the rear elevation view being a mirror image of;
FIG. **3** is a top plan view of the ring mechanism having elliptical cross sectional ring members of FIG. **1**;
FIG. **4** is a bottom plan view of the ring mechanism having elliptical cross sectional ring members of FIG. **1**;
FIG. **5** is a right side elevation view of the ring mechanism having elliptical cross sectional ring members of FIG. **1**, with the left side elevation view being a mirror image of;
FIG. **6** is a cross sectional view of the ring mechanism having elliptical cross sectional ring members of FIG. **1**, taken along line **6-6** of FIG. **3**;
FIG. **7** is a perspective view of the second embodiment of a ring mechanism having elliptical cross sectional ring members showing my design;
FIG. **8** is a front elevation of the ring mechanism having elliptical cross sectional ring members of FIG. **7**, with the rear elevation view being a mirror image of;
FIG. **9** is a top plan view of the ring mechanism having elliptical cross sectional ring members of FIG. **7**;
FIG. **10** is a bottom plan view of the ring mechanism having elliptical cross sectional ring members of FIG. **7**;
(Continued)

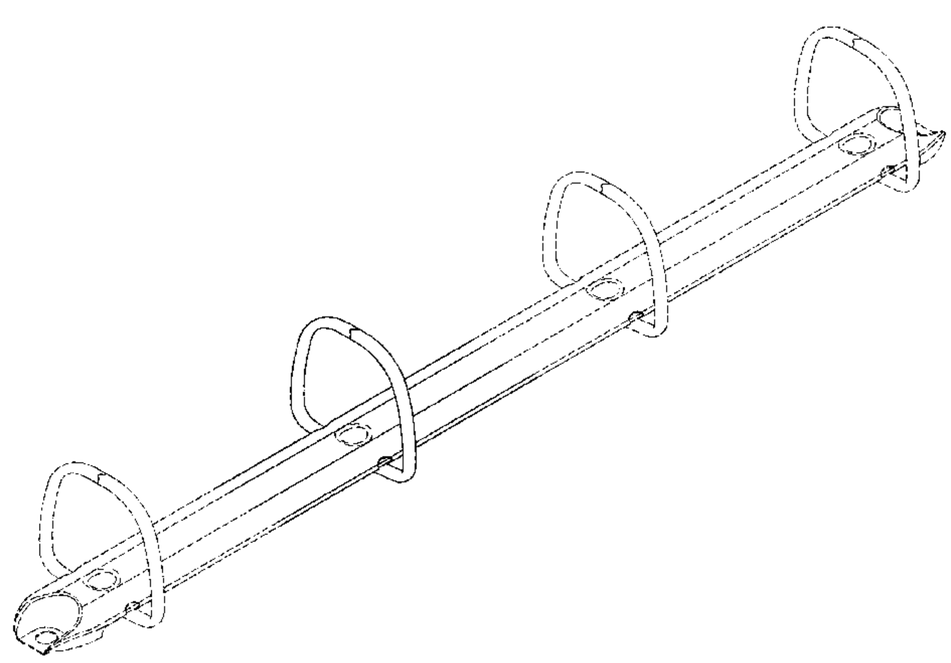

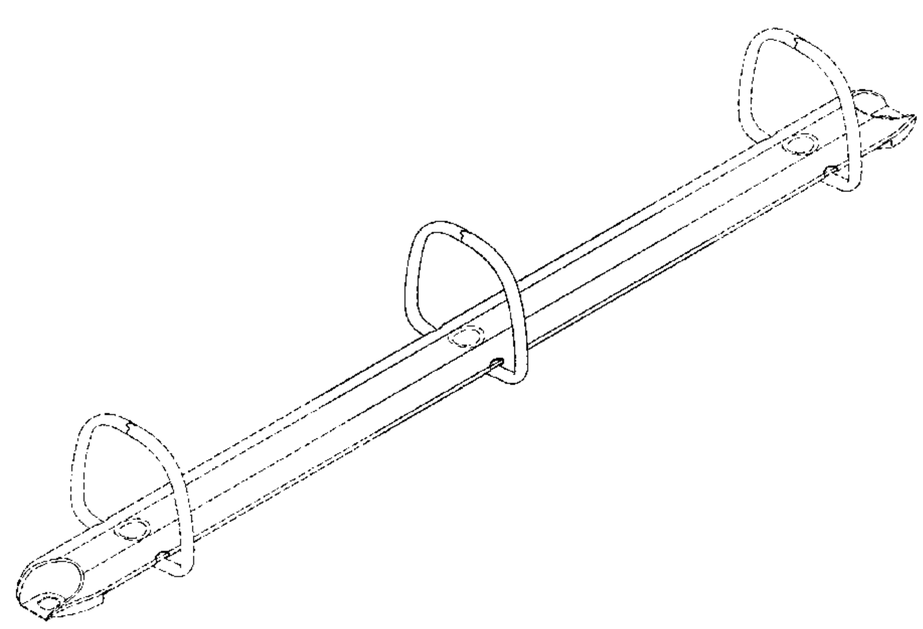

FIG. **11** is a right side elevation view of the ring mechanism having elliptical cross sectional ring members of FIG. **7**, with the left side elevation view being a mirror image of; and,

FIG. **12** is a cross sectional view of the ring mechanism having elliptical cross sectional ring members of FIG. **7**, taken along line **12-12** of FIG. **3**.

The broken lines in the drawings illustrate portions of the ring mechanism having elliptical cross sectional ring members and form no part of the claimed design.

1 Claim, 12 Drawing Sheets

(58) **Field of Classification Search**
CPC B42F 13/26; B42F 13/36; B42F 13/22; B42F 13/20; B42F 3/04; B42F 3/00
See application file for complete search history.

(56) **References Cited**

U.S. PATENT DOCUMENTS

1,398,540	A	11/1921	Day	
1,473,354	A	11/1923	Nachtrieb	
1,996,463	A	4/1935	Dawson et al.	
2,020,129	A	11/1935	Wedge	
2,088,431	A	7/1937	Newman	
2,105,235	A	1/1938	Schade	
2,119,639	A	6/1938	Lotter	
2,612,169	A	9/1952	Segal	
2,985,173	A	5/1961	White	
3,098,490	A	7/1963	Wance	
3,833,308	A	9/1974	Seaborn	
3,884,586	A	5/1975	Michaelis et al.	
3,995,961	A	12/1976	Dorfman et al.	
4,607,970	A	8/1986	Heusinkveld	
4,678,357	A	7/1987	Kissel et al.	
4,690,580	A	9/1987	Kissel	
4,792,253	A	12/1988	Jacobson	
4,925,328	A	5/1990	Jefferies	
5,180,247	A	1/1993	Yu	
5,286,128	A	2/1994	Gillum	
5,393,156	A	2/1995	Mullin et al.	
5,476,335	A	12/1995	Whaley	
5,618,122	A	4/1997	Constantine	
5,692,848	A	12/1997	Wada	
6,045,286	A *	4/2000	Tung	B42F 13/26 402/26
6,328,497	B1 *	12/2001	To	B42F 13/26 402/26
D453,026	S *	1/2002	To	D19/32
6,364,558	B1	4/2002	To	
D457,559	S	5/2002	To	
D468,351	S	1/2003	To	
7,275,886	B2	10/2007	Cheng	
7,360,962	B2	4/2008	To	
D582,477	S	12/2008	To	
7,478,963	B2 *	1/2009	Tanaka	B42F 13/22 402/20
D585,935	S	2/2009	To	
D591,344	S	4/2009	Tanaka et al.	
D598,494	S	8/2009	To	
7,637,682	B2	12/2009	To	
7,648,302	B2	1/2010	Zhang et al.	
D616,023	S	5/2010	To	
D616,934	S	6/2010	To	
D622,316	S	8/2010	To	
RE41,852	E	10/2010	To	
8,899,864	B2	12/2014	To	
D735,808	S *	8/2015	To	D19/32
D745,602	S *	12/2015	Qiu	D19/32
2004/0086323	A1 *	5/2004	Tanaka	B42F 13/26 402/73
2005/0271459	A1	12/2005	To et al.	
2007/0231057	A1	10/2007	Cheng	
2008/0008519	A1 *	1/2008	To	B42F 13/26 402/31
2008/0080925	A1	4/2008	Cheng	
2008/0080926	A1 *	4/2008	Liu	B42F 13/26 402/41
2009/0060630	A1	3/2009	To et al.	
2009/0067915	A1 *	3/2009	To	B42F 13/26 402/38
2013/0084122	A1	4/2013	Sa	
2013/0236233	A1	9/2013	Lui	

OTHER PUBLICATIONS

Office Action dated Oct. 8, 2014 in U.S. Appl. No. 29/435,328, 6 pages.

* cited by examiner

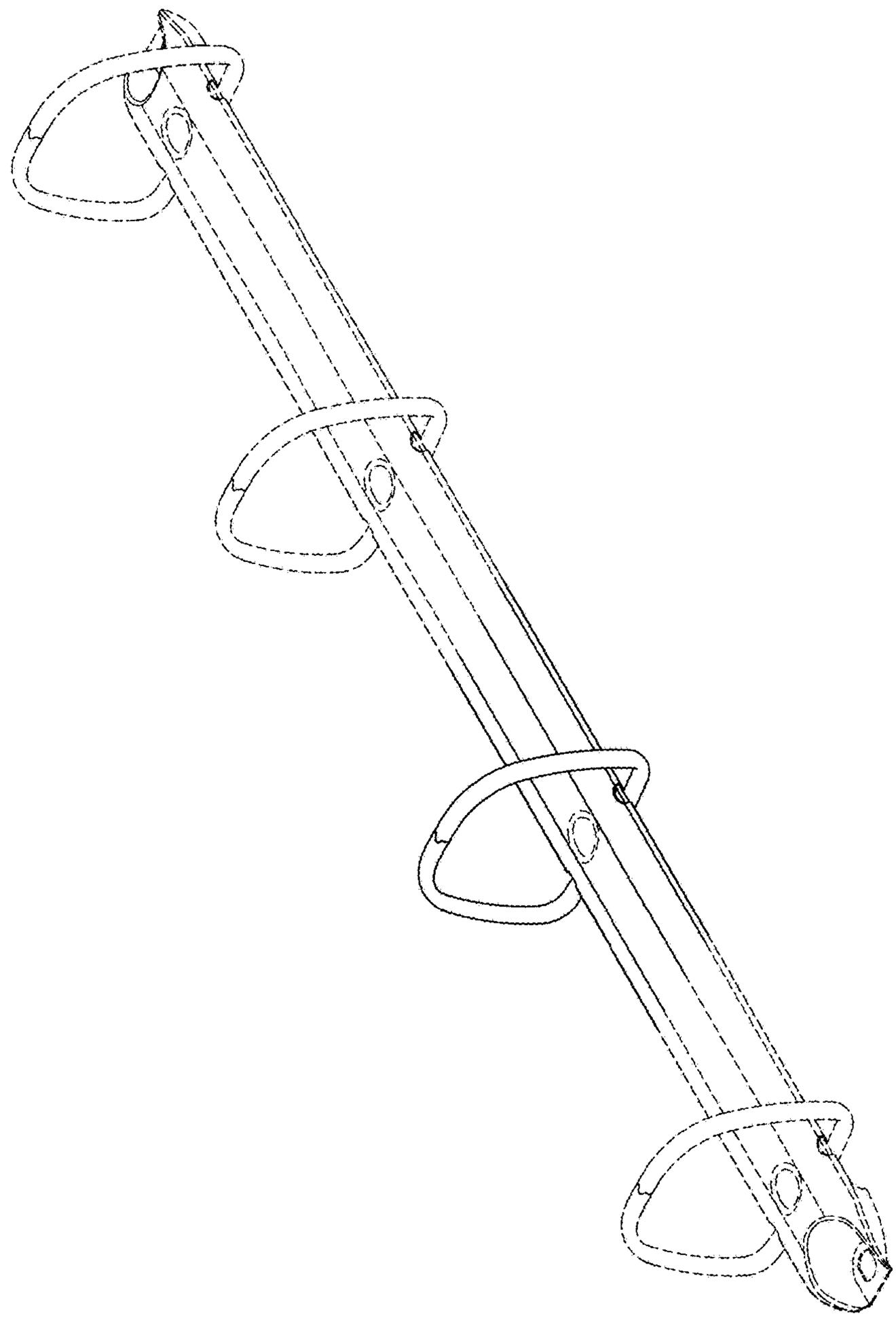

FIG. 1

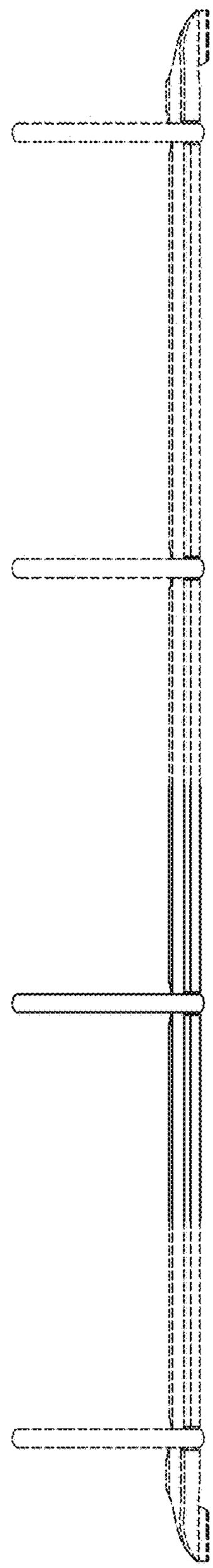

FIG. 2

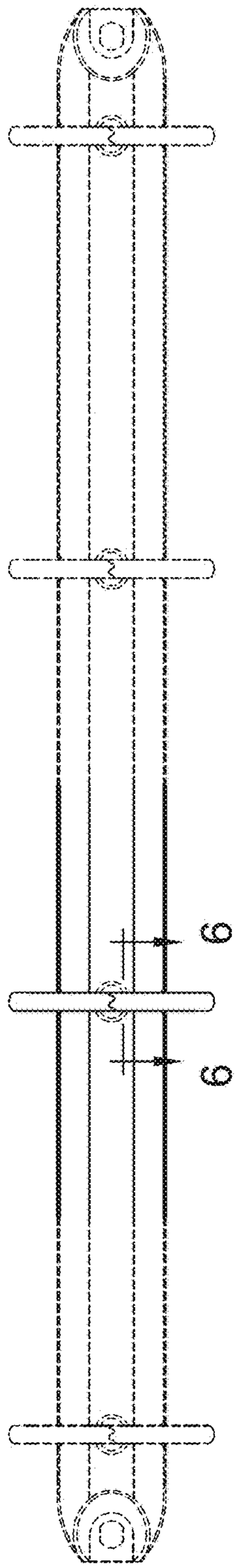

FIG. 3

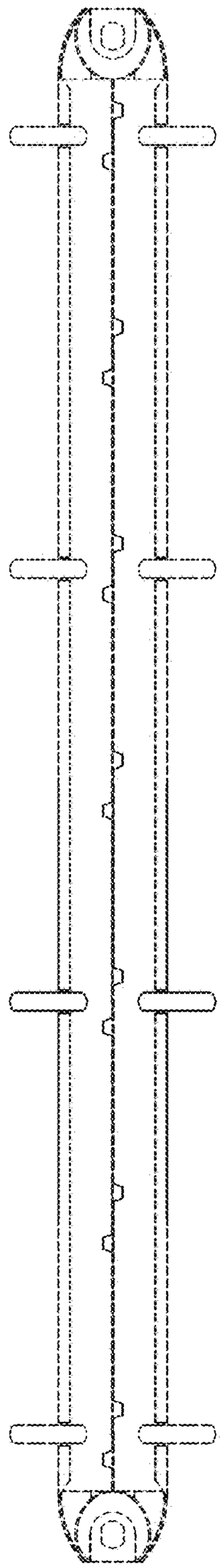

FIG. 4

FIG. 5

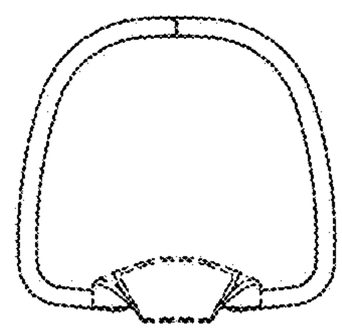

FIG. 6

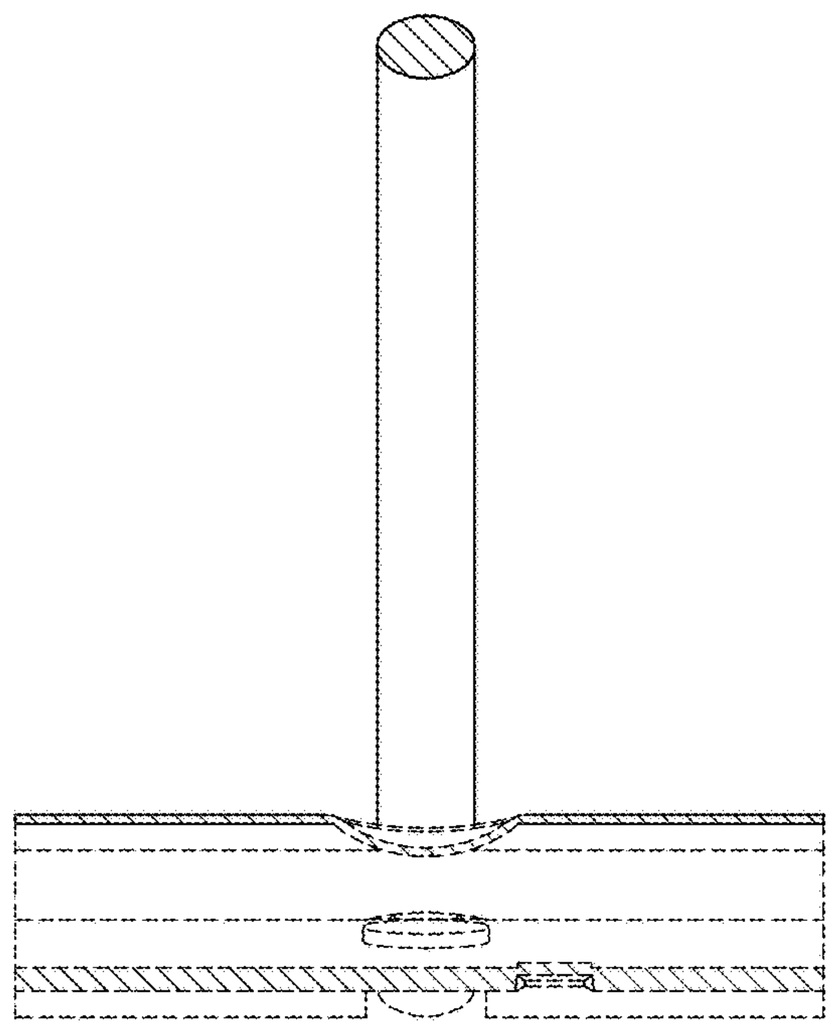

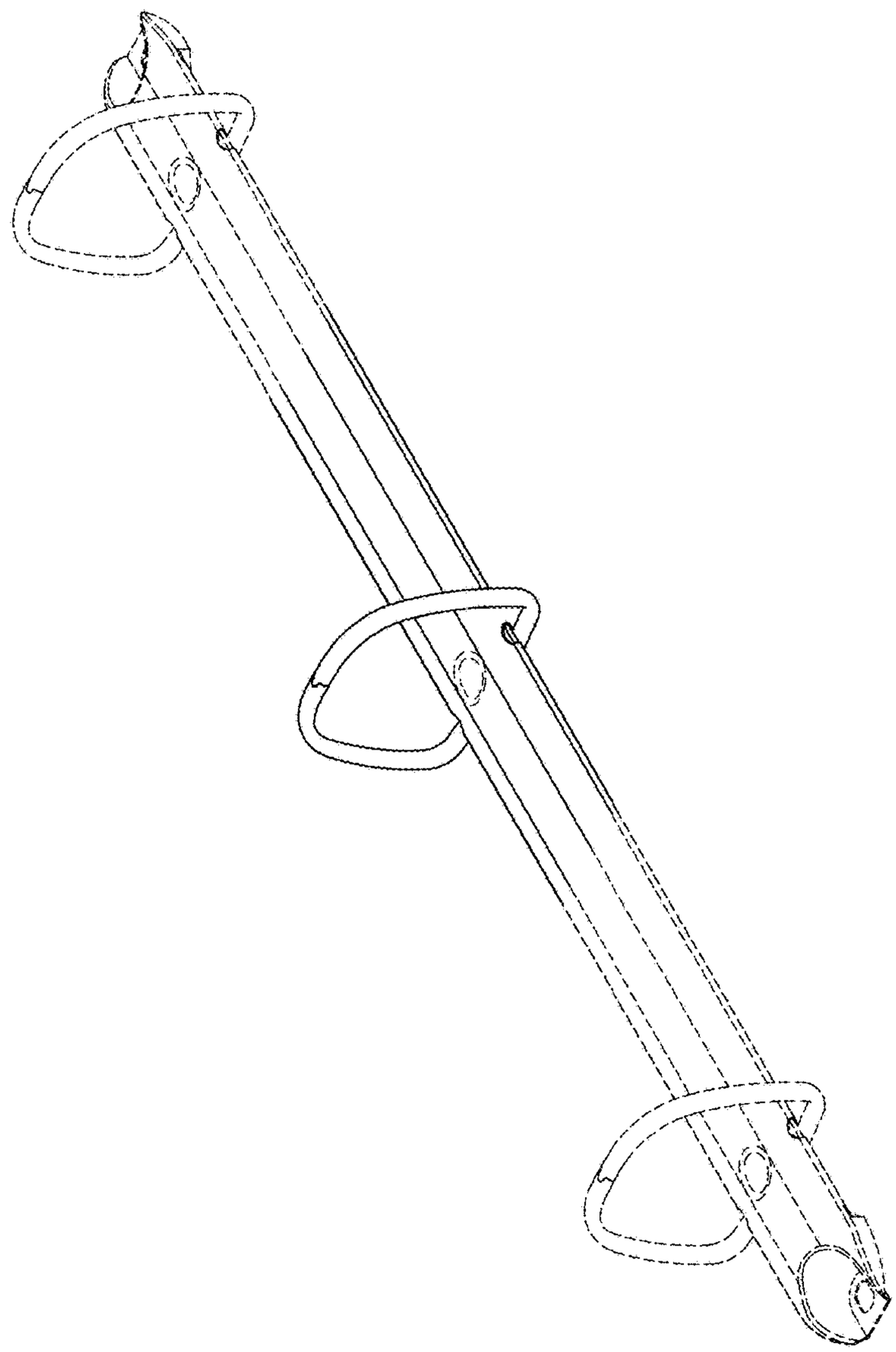

FIG. 7

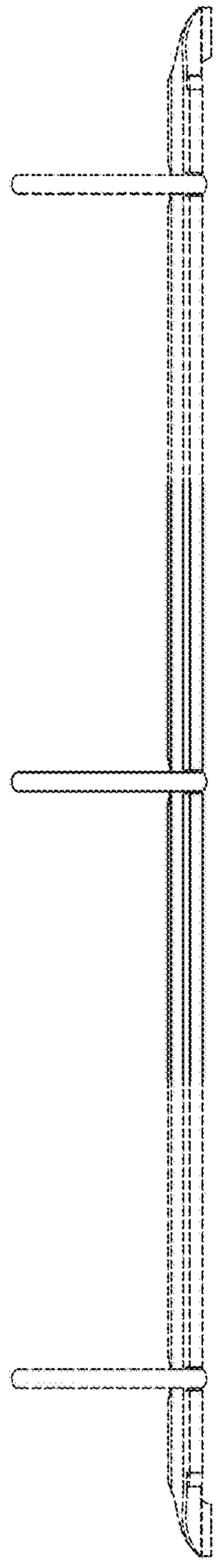

FIG. 8

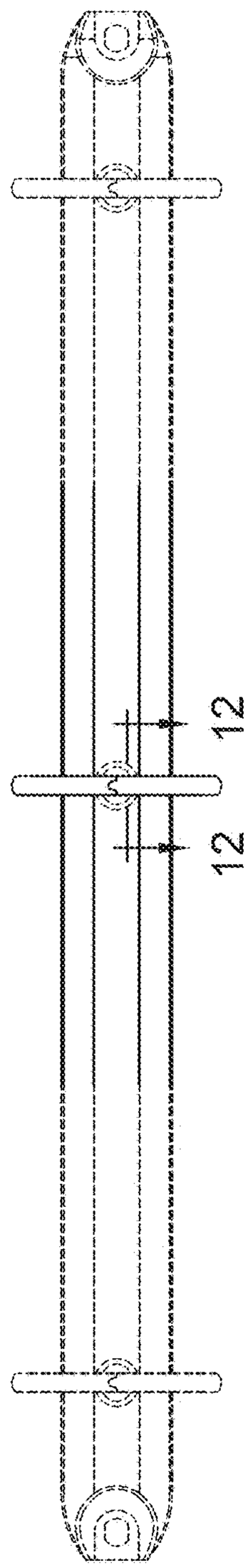

FIG. 9

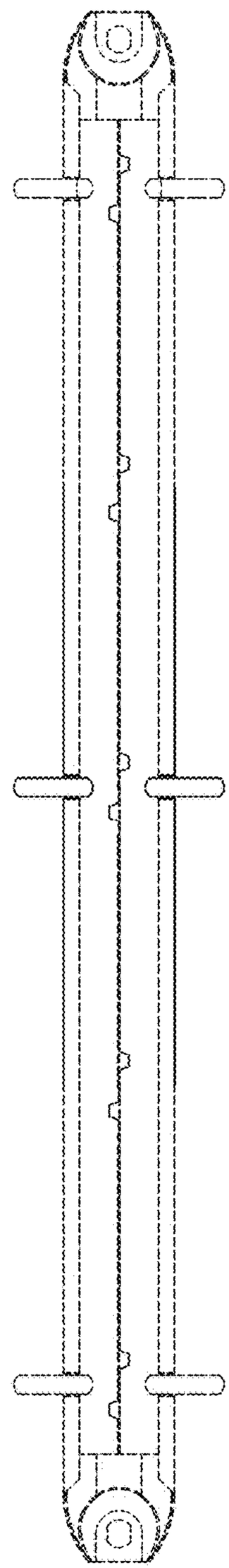

FIG. 10

FIG. 11

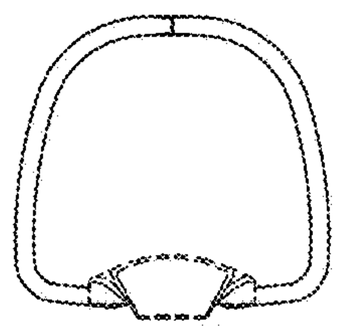
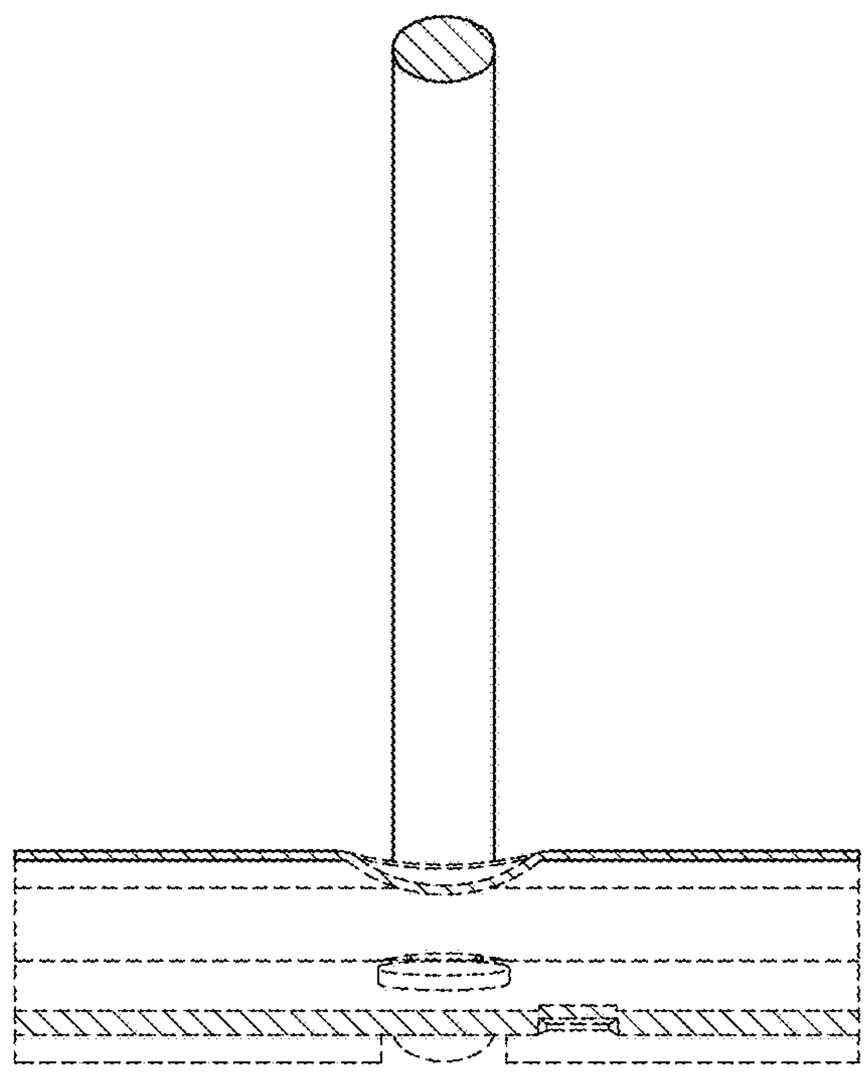
FIG. 12