US00D782959S

(12) United States Design Patent

Sareen

(10) Patent No.: US D782,959 S
(45) Date of Patent: ** Apr. 4, 2017

(54) **TIRE TREAD**

(71) Applicant: **Omni United (S) Pte Ltd.**, Singapore (SG)

(72) Inventor: **Gajendra Singh Sareen**, Singapore (SG)

(73) Assignee: **Omni United (S) Pte Ltd.**, Singapore (SG)

(**) Term: **15 Years**

(21) Appl. No.: **29/556,200**

(22) Filed: **Feb. 29, 2016**

(51) **LOC (10) Cl.** **12-15**

(52) **U.S. Cl.**
USPC **D12/521**

(58) **Field of Classification Search**
USPC 152/5, 151, 152.1, 167, 208, 152/209.1–209.28, 246, 450, 526, 527, 152/532, 535, 538, 541; D12/145, D12/500–605, 900–901
CPC B60C 11/00; B60C 2011/0337; B60C 2011/0339; B60C 2011/0386; B60C 3/00; B60C 3/08; B60C 1/00; B60C 2200/00; B60C 2200/02; B60C 2200/04; B60C 2200/06; B60C 2200/065; B60C 2200/08; B60C 2200/10; B60C 2200/12; B60C 2200/14; B60C 7/00; B60C 7/02; B60C 7/04; B60C 7/06; B60C 7/08; B60C 5/00; B60C 13/00
See application file for complete search history.

(56) **References Cited**

U.S. PATENT DOCUMENTS

D402,240 S 12/1998 Hubbell, Jr.
D455,395 S 4/2002 Blankenship et al.
D483,007 S * 12/2003 Brayer D12/588
D492,247 S * 6/2004 Schmalix D12/588
D525,186 S * 7/2006 Martin D12/521
D531,113 S 10/2006 Dixon et al.
D550,610 S 9/2007 Guspodin et al.
D581,346 S * 11/2008 Shondel D12/521
D593,937 S 6/2009 Maxwell et al.
D604,692 S 11/2009 Ebiko et al.
D606,925 S * 12/2009 Shavers D12/521
D607,812 S 1/2010 Dixon et al.
D655,239 S 3/2012 Zhao
D659,083 S * 5/2012 Nguyen D12/587
D700,884 S 3/2014 Herbeuval et al.
(Continued)

Primary Examiner — Manpreet Matharu
Assistant Examiner — Keith Wilson
(74) *Attorney, Agent, or Firm* — Perkins Coie LLP

(57) **CLAIM**

The ornamental design for a tire tread, as shown and described.

DESCRIPTION

FIG. **1** is a perspective view of a tire tread, showing my new design;
FIG. **2** is a front view thereof;
FIG. **3** is a side view thereof;
FIG. **4** is an opposite side view thereof;
FIG. **5** is an enlarged perspective view of a section of the tire tread defined by lines **5-5** in FIG. **1**;
FIG. **6** is an enlarged front view of a section of the tire tread as defined by lines **6-6** in FIG. **2**; and
FIG. **7** is an enlarged side view of a section of the tire tread as defined by lines **7-7** in FIG. **3**.
The portions of drawing shown in broken line represent environment and form not part of the claimed design.
The additional dash dot broken line shown in FIGS. **5-7** represent the area from which the sectional view are cut from.

1 Claim, 7 Drawing Sheets

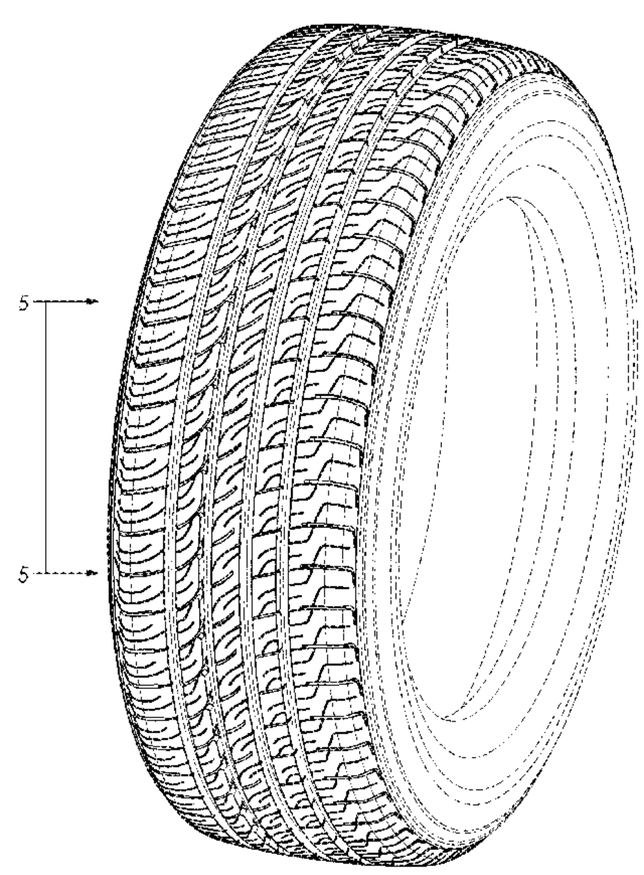

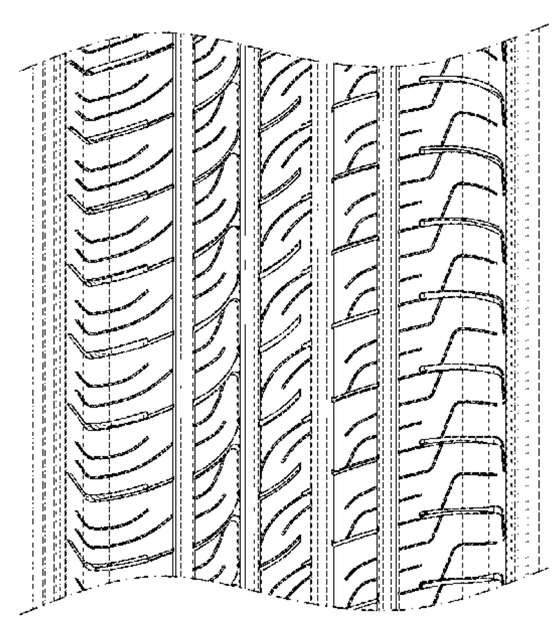

(56) **References Cited**

U.S. PATENT DOCUMENTS

D733,636	S	7/2015	Janesh et al.	
D735,113	S	7/2015	Schoeppner et al.	
D735,114	S	7/2015	Curtis et al.	
D735,637	S	8/2015	Hughes et al.	
D755,111	S *	5/2016	Yang	D12/521
2003/0116246	A1 *	6/2003	Kuroda	B60C 3/06 152/209.9

* cited by examiner

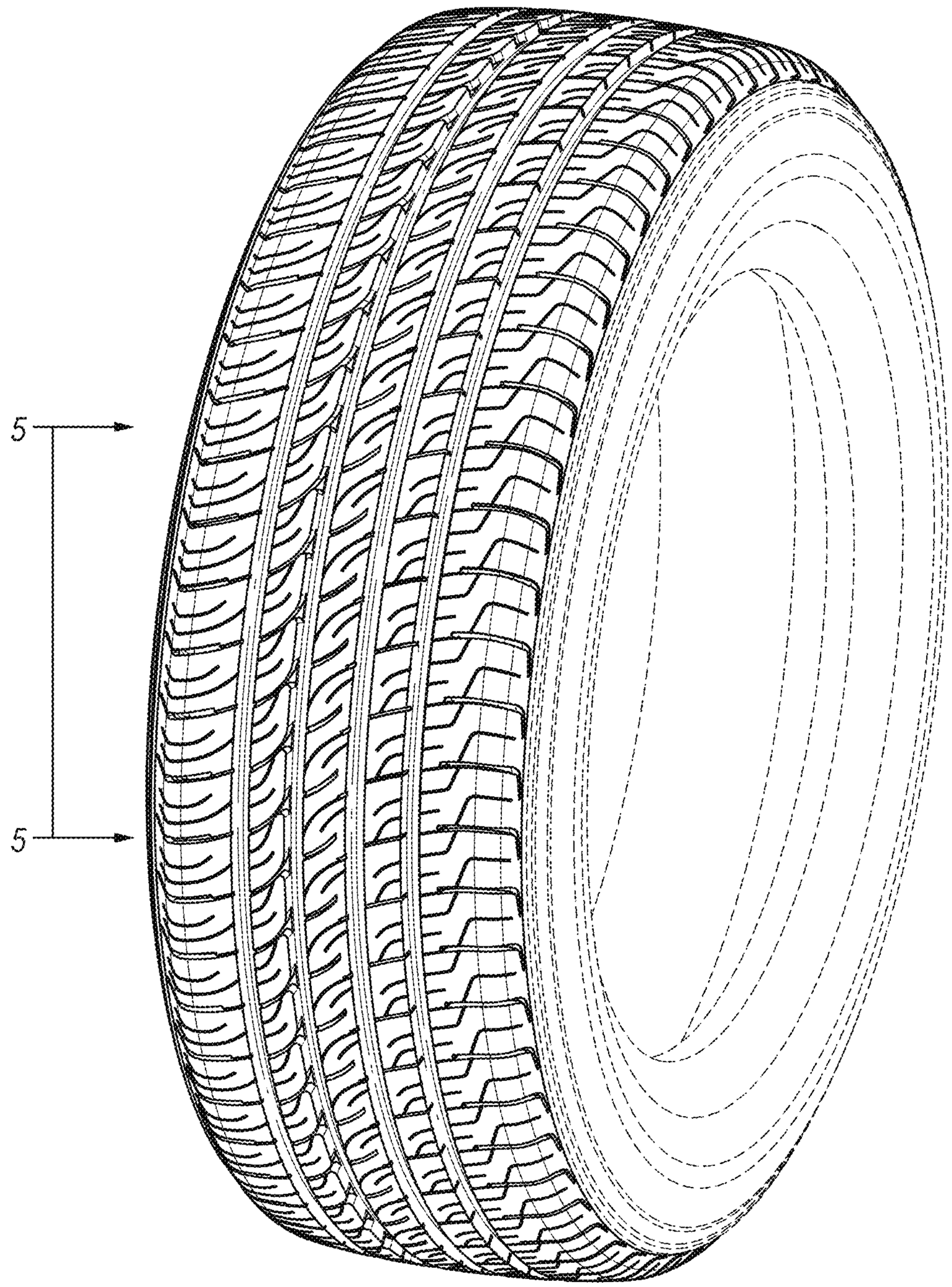

FIG. 1

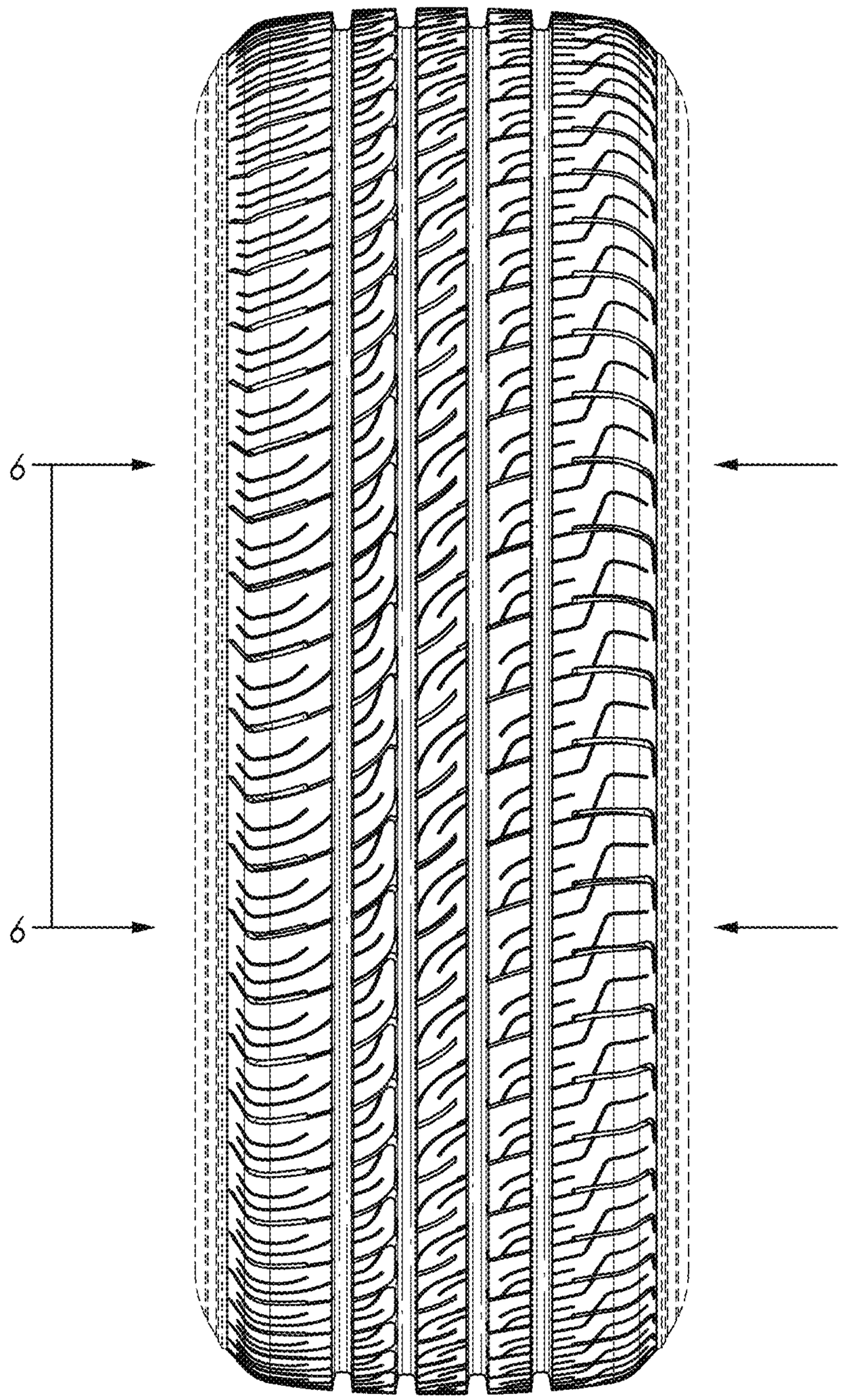

FIG. 2

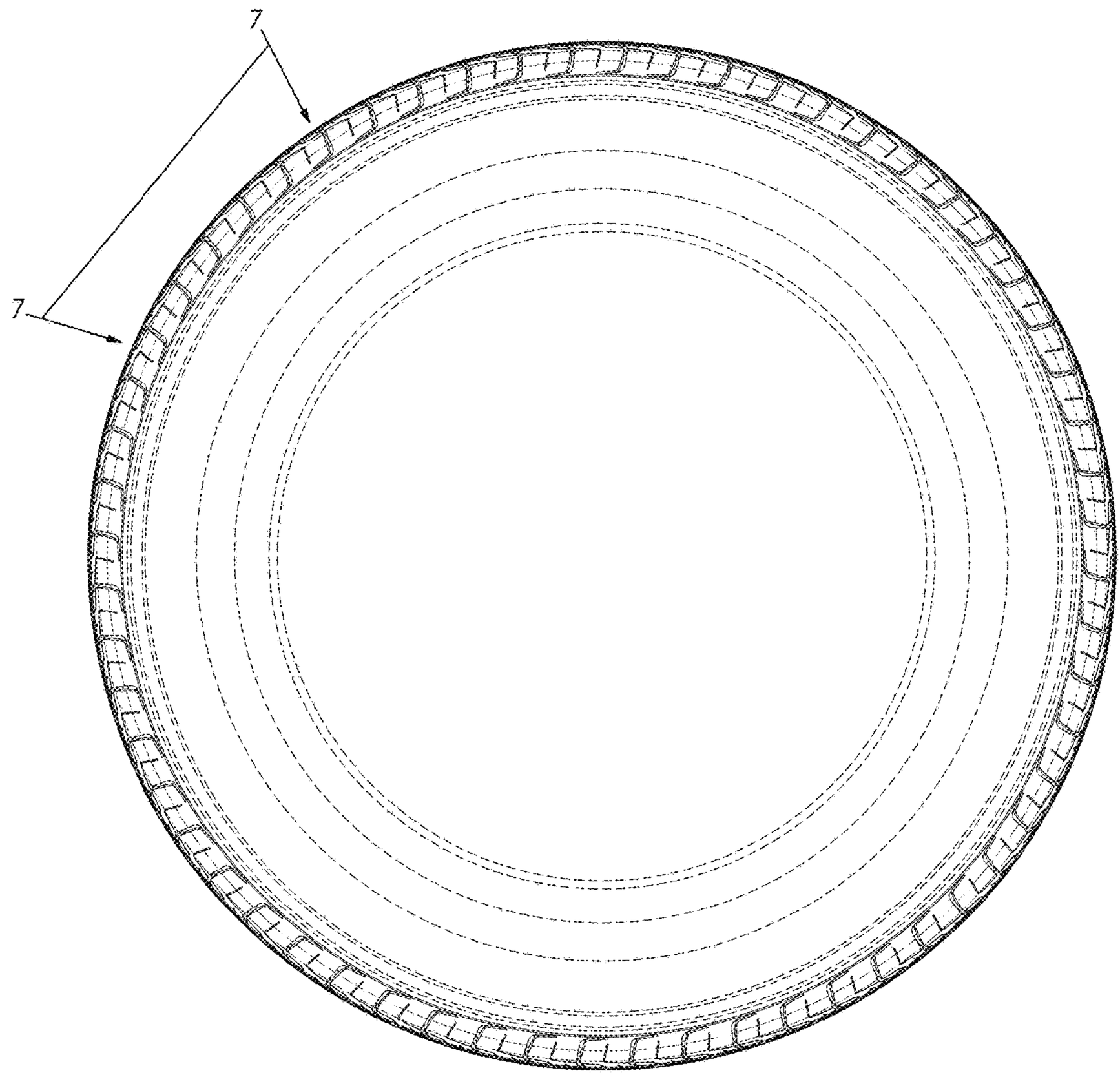

FIG. 3

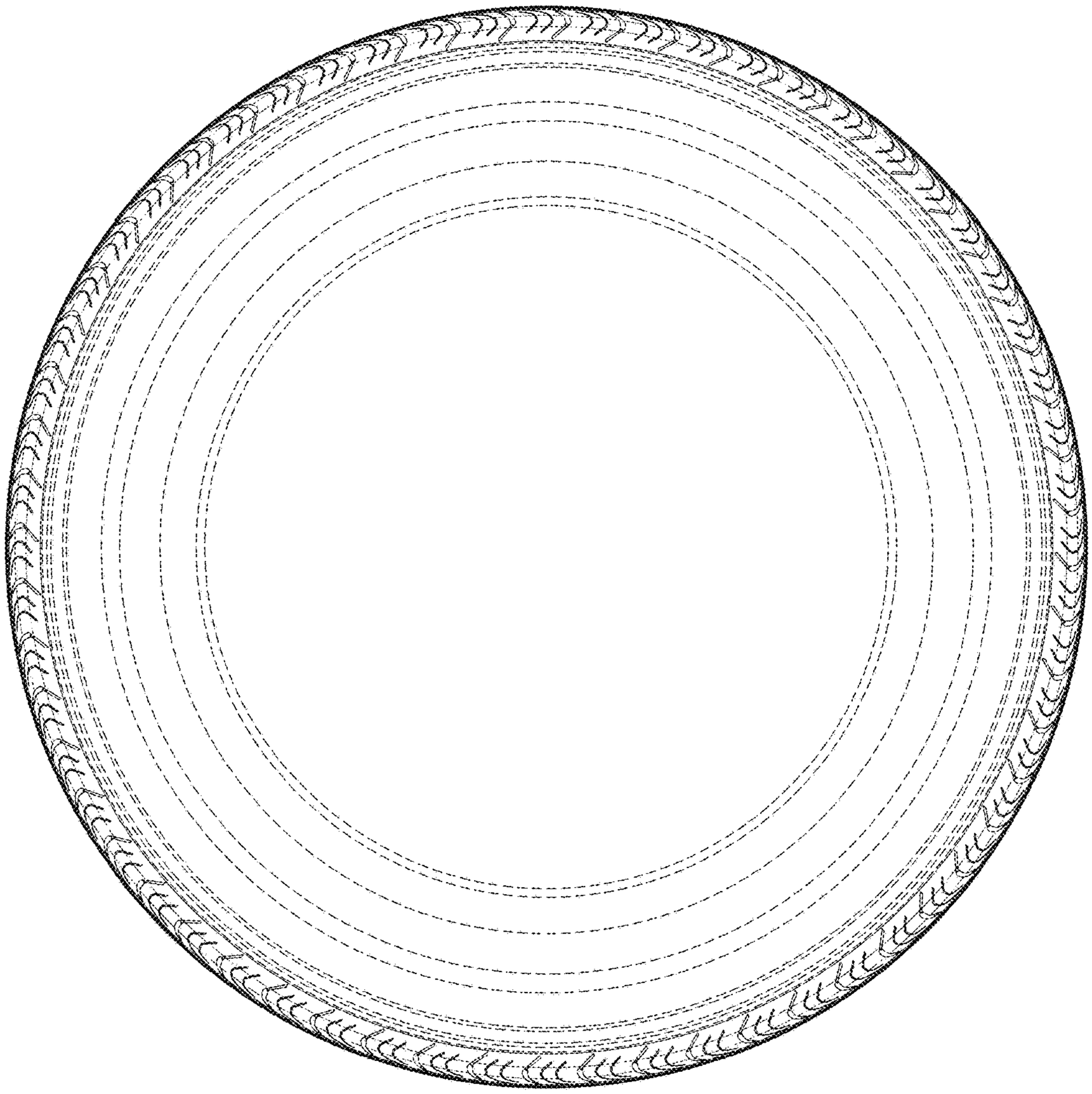

FIG. 4

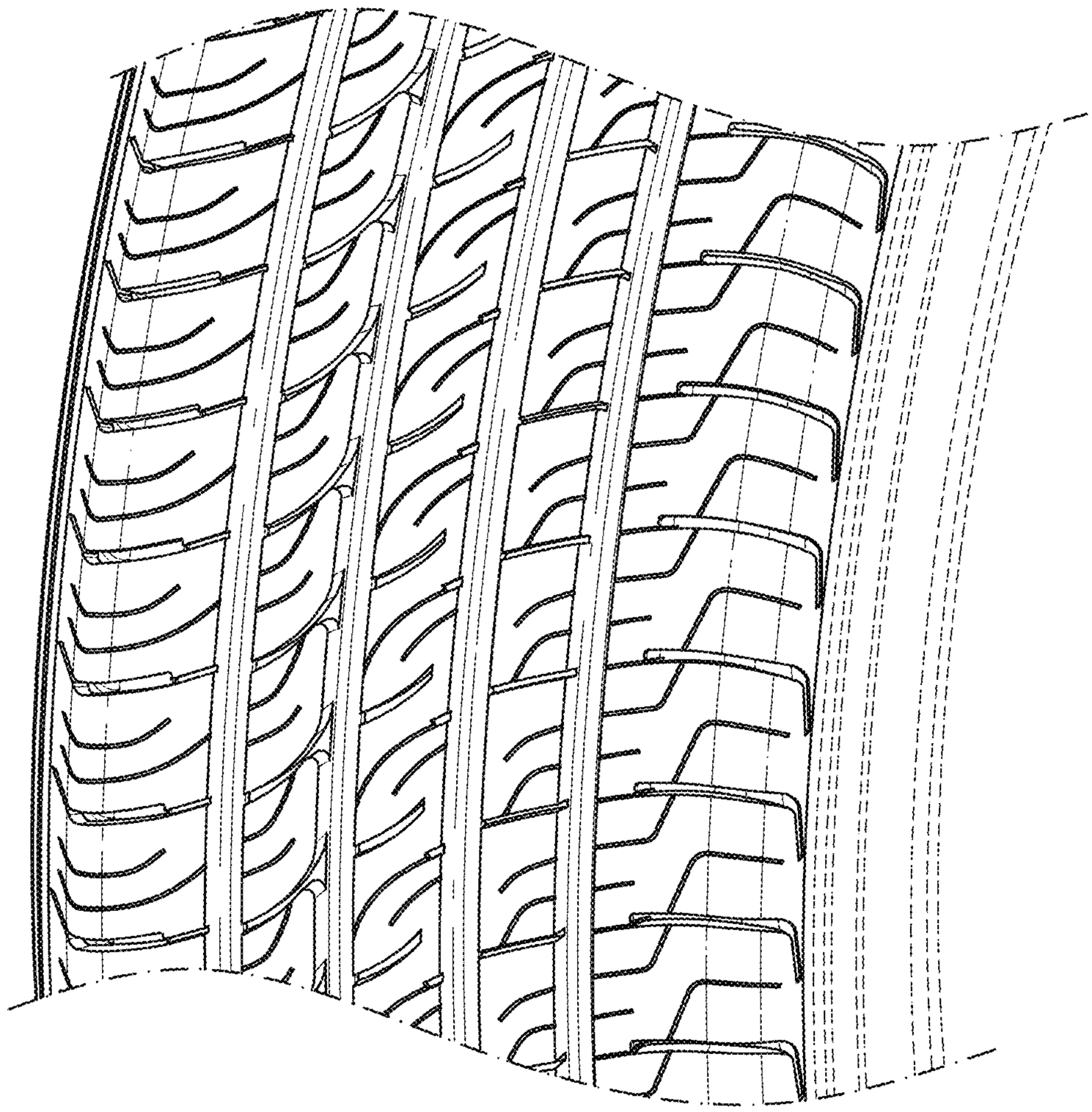

FIG. 5

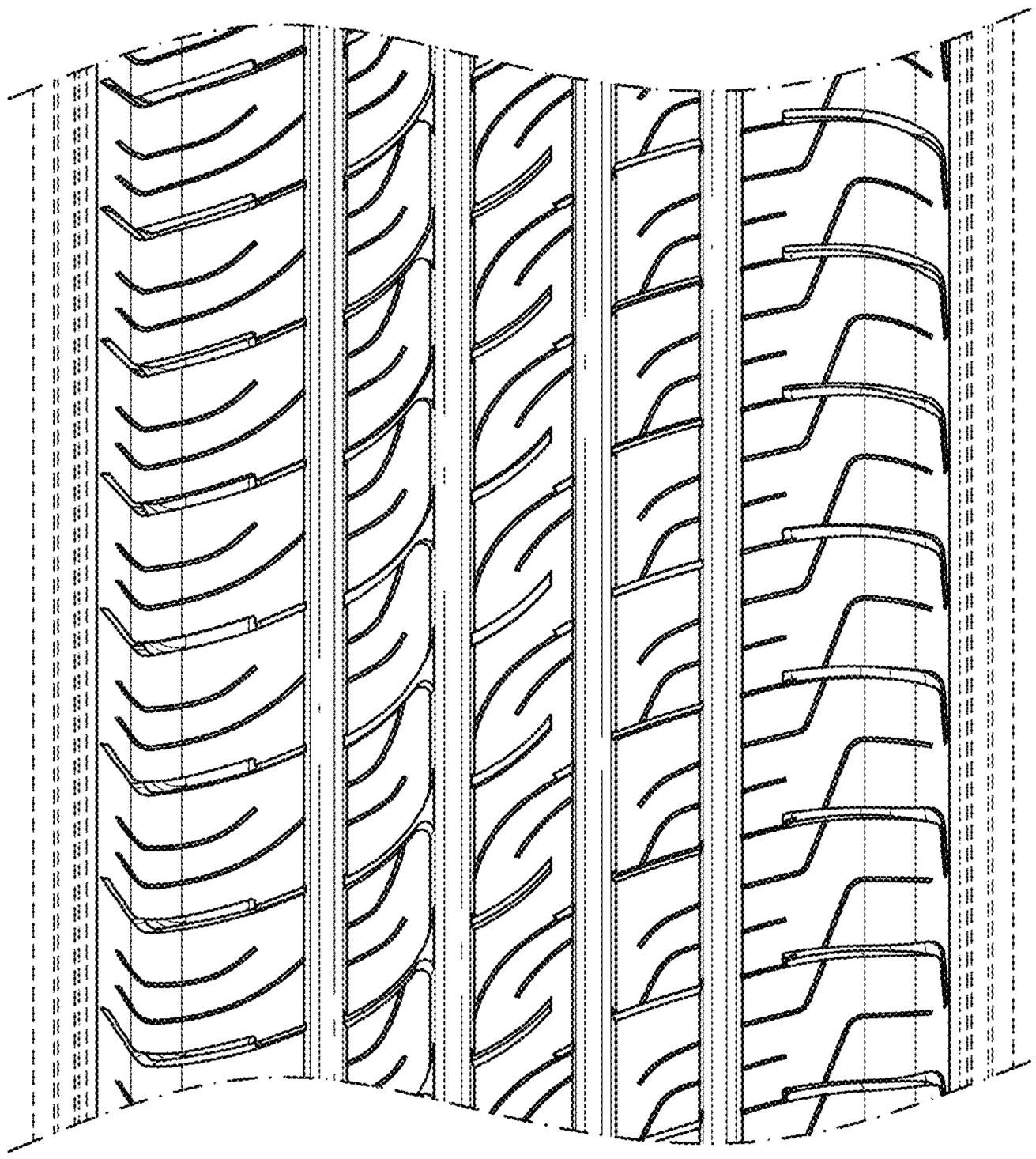

FIG. 6

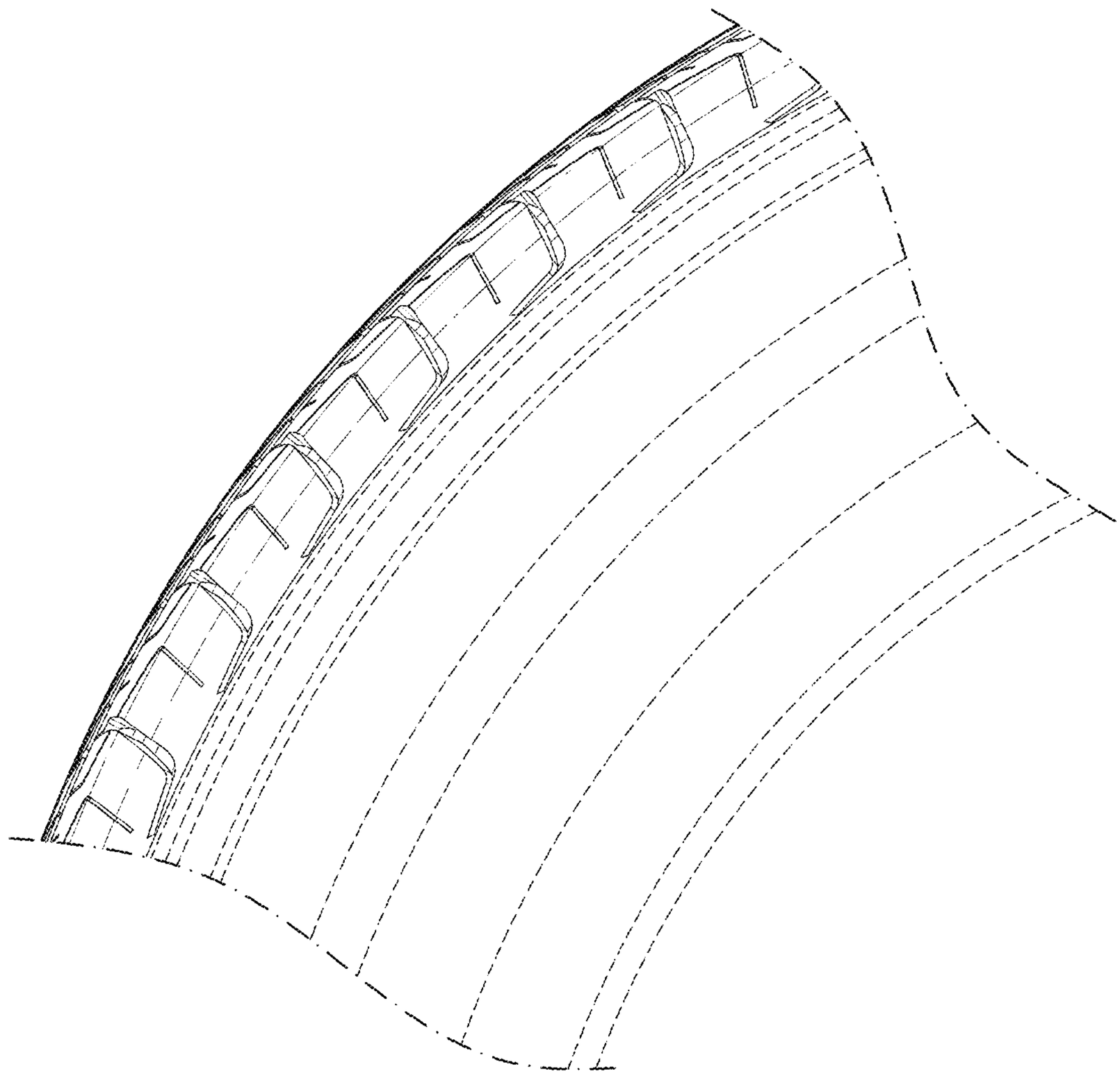

FIG. 7