US00D781225S

(12) United States Design Patent
Westaway

(10) Patent No.: US D781,225 S
(45) Date of Patent: ** Mar. 14, 2017

(54) **TIRE TREAD**

(71) Applicant: **Bridgestone Bandag, LLC**, Muscatine, IA (US)

(72) Inventor: **Terry A. Westaway**, Conesville, IA (US)

(73) Assignee: **Bridgestone Bandag, LLC**, Muscatine, IA (US)

(**) Term: **15 Years**

(21) Appl. No.: **29/540,796**

(22) Filed: **Sep. 28, 2015**

(51) **LOC (10) Cl.** **12-15**

(52) **U.S. Cl.**
USPC **D12/594**

(58) **Field of Classification Search**
USPC D12/579, 587, 588, 594, 600, 601, 900
CPC . B60C 11/03; B60C 11/0306; B60C 11/0309; B60C 11/0311; B60C 11/0332; B60C 11/0337; B60C 11/11; B60C 11/12
See application file for complete search history.

(56) **References Cited**

U.S. PATENT DOCUMENTS

D385,235 S * 10/1997 Young D12/588
D392,605 S 3/1998 Le et al.
D397,970 S * 9/1998 Le D12/580
D415,450 S 10/1999 Williams
D421,942 S 3/2000 Fierro et al.
D433,356 S * 11/2000 Loeffler D12/601
D448,707 S * 10/2001 Maziarka D12/595
D451,860 S * 12/2001 Schuster D12/600
D452,199 S * 12/2001 Robert D12/594
D473,843 S 4/2003 Le et al.
D483,719 S 12/2003 Weaver
D502,444 S 3/2005 Wage
D517,978 S 3/2006 Robert
D604,230 S * 11/2009 Brown D12/588
D605,108 S * 12/2009 Brown D12/588
D608,729 S 1/2010 Brown
D609,170 S * 2/2010 Feider D12/588
D609,175 S 2/2010 Feider et al.
D610,972 S * 3/2010 You D12/600
D615,922 S 5/2010 Takano
D618,162 S 6/2010 Mayni et al.
(Continued)

OTHER PUBLICATIONS

Bandag Ultra All-Position tire tread, 2012 Tread Design Guide, p. 234, vol. 47, Tire Guides, Inc. Boca Raton, FL.

Primary Examiner — Robert M Spear

(57) **CLAIM**

The ornamental design for a tire tread, as shown and described.

DESCRIPTION

FIG. **1** is a side perspective view of a tire tread showing my new design, it being understood that the tread pattern is repeated throughout the circumference of the tire tread, the opposite side being the same as that shown;
FIG. **2** is a front elevational view thereof, the opposite side being identical thereto;
FIG. **3** is a side elevational view of the right side thereof, the opposite side being identical thereto; and,
FIG. **4** is an enlarged fragmentary front elevational view thereof.
In the drawings, the shaded surfaces comprise the claim. The broken lines defining the sidewall, inner bead, tread lug side walls, and the peripheral boundary between the claimed tire tread and the sidewall depict environmental subject matter that forms no part of the claimed design.

1 Claim, 4 Drawing Sheets

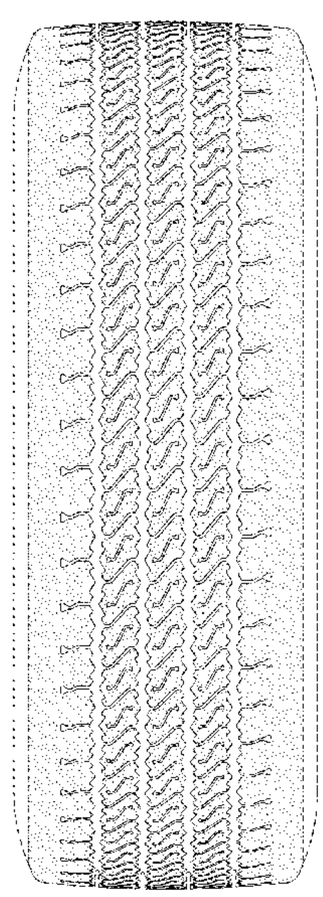

(56) **References Cited**

U.S. PATENT DOCUMENTS

D640,625	S		6/2011	Nobunaga
D647,036	S		10/2011	Yamaguchi
D651,553	S		1/2012	Knowles et al.
D662,875	S		7/2012	Xu
D668,209	S		10/2012	De Benedittis et al.
D735,646	S		8/2015	Hair, Jr. et al.
D738,815	S		9/2015	Dixon et al.
D754,059	S	*	4/2016	Kristen D12/586

* cited by examiner

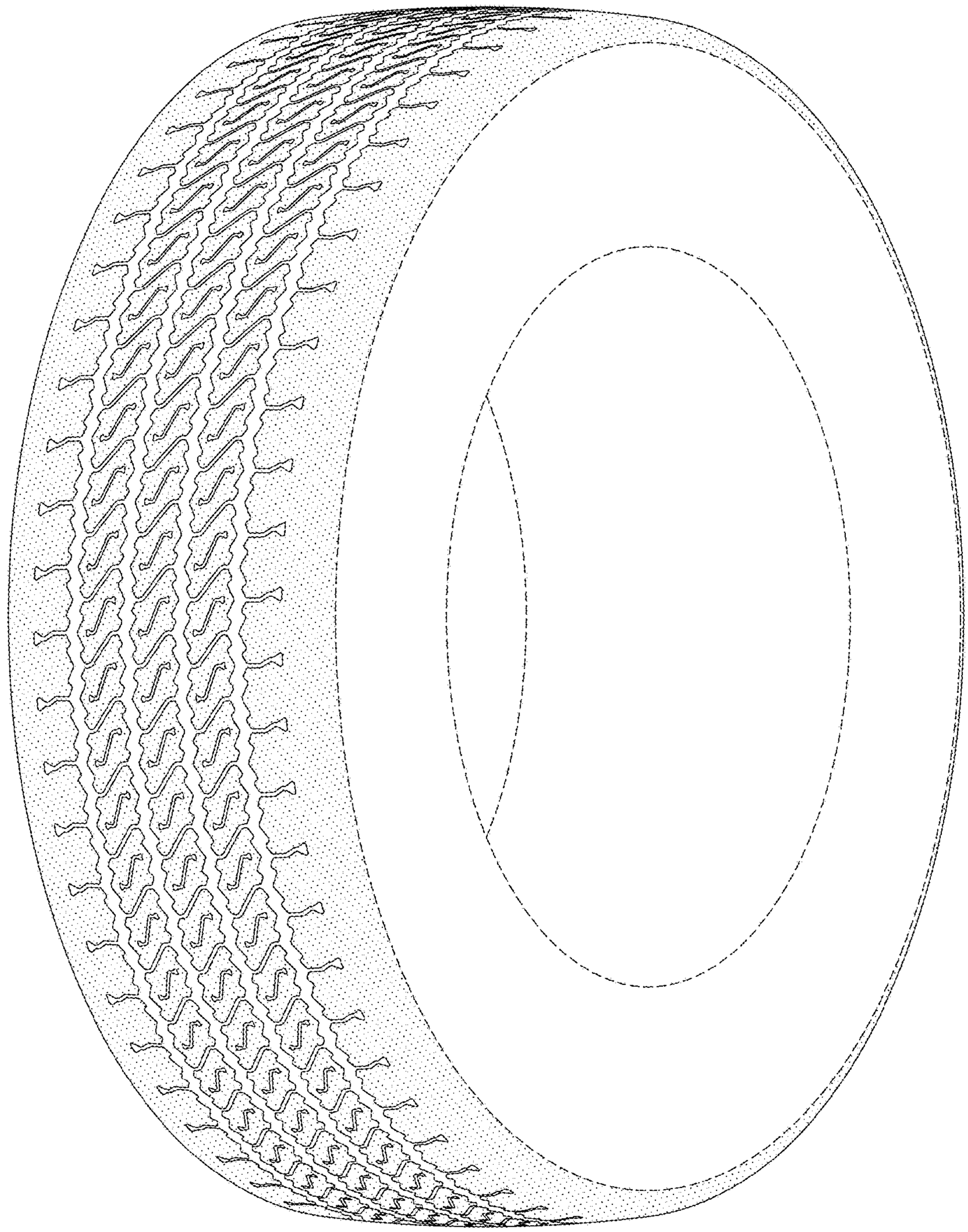

FIG-1

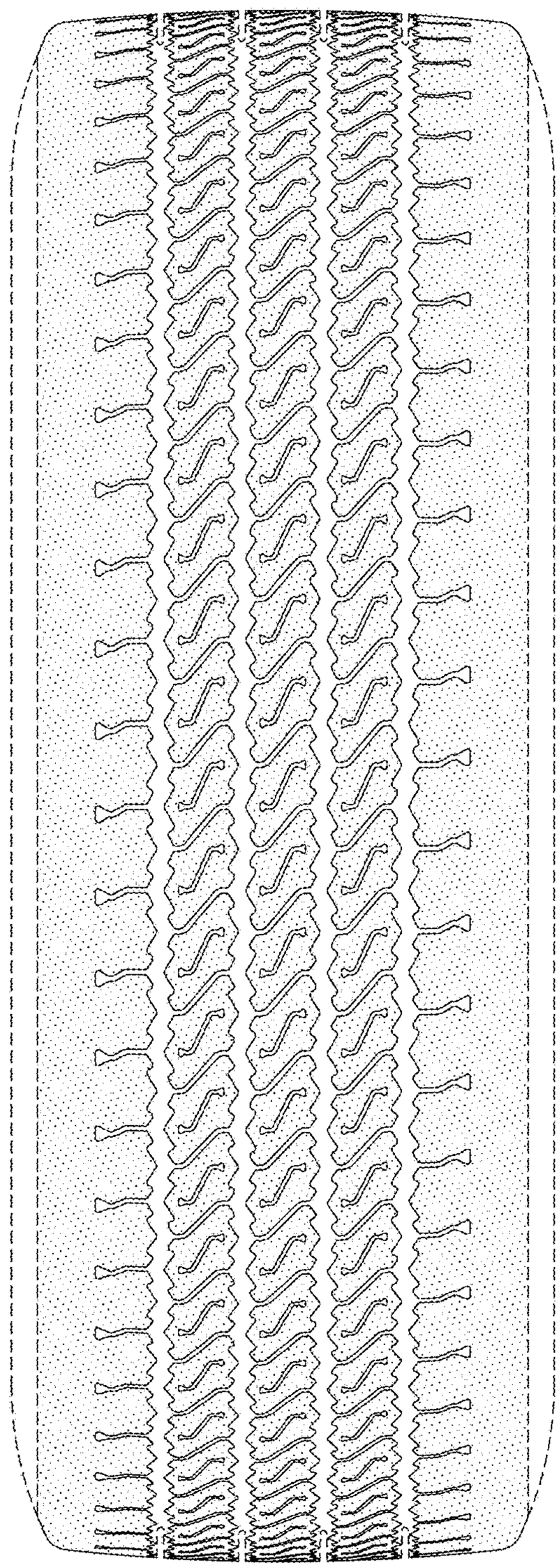

FIG-2

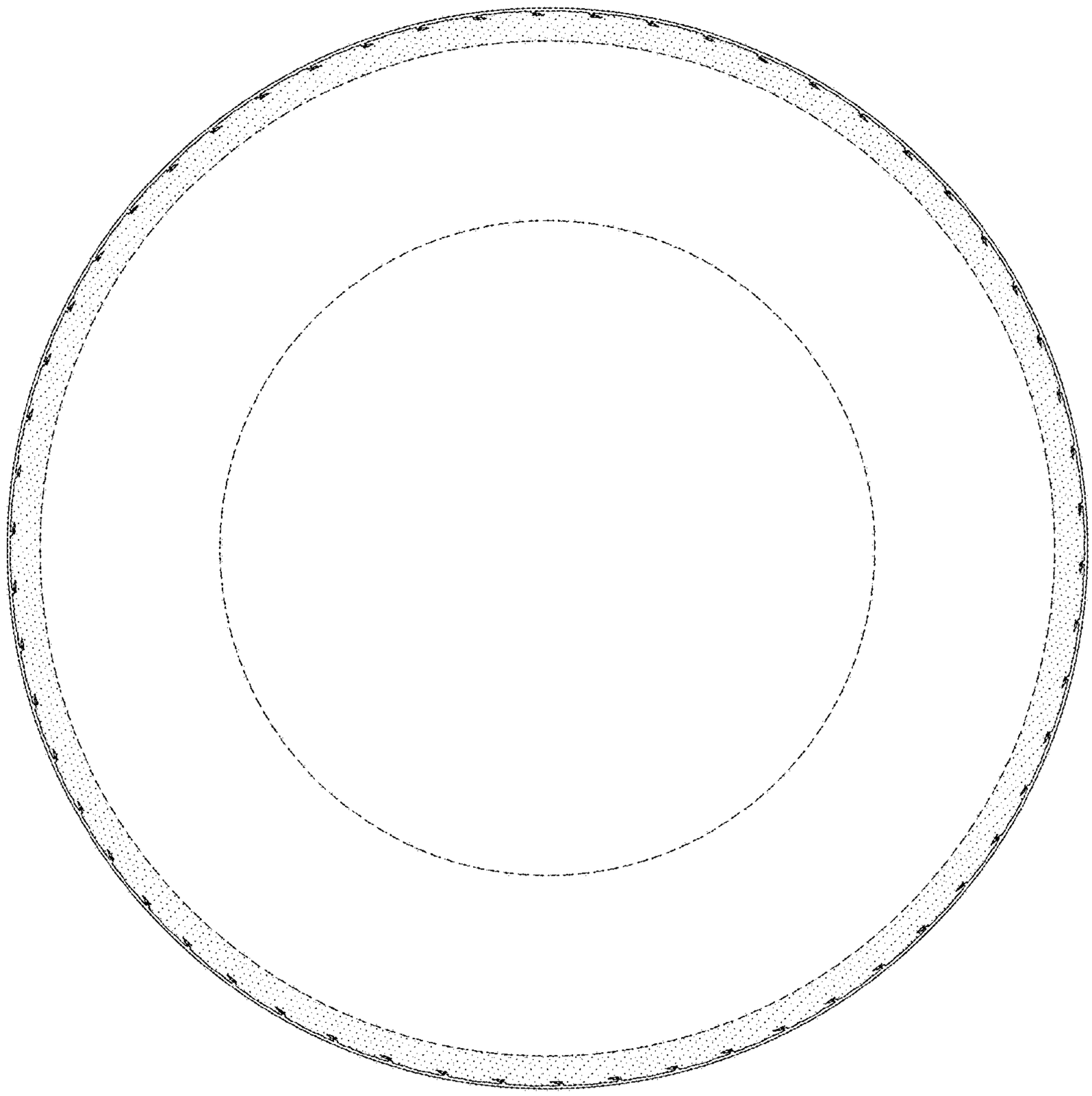

FIG–3

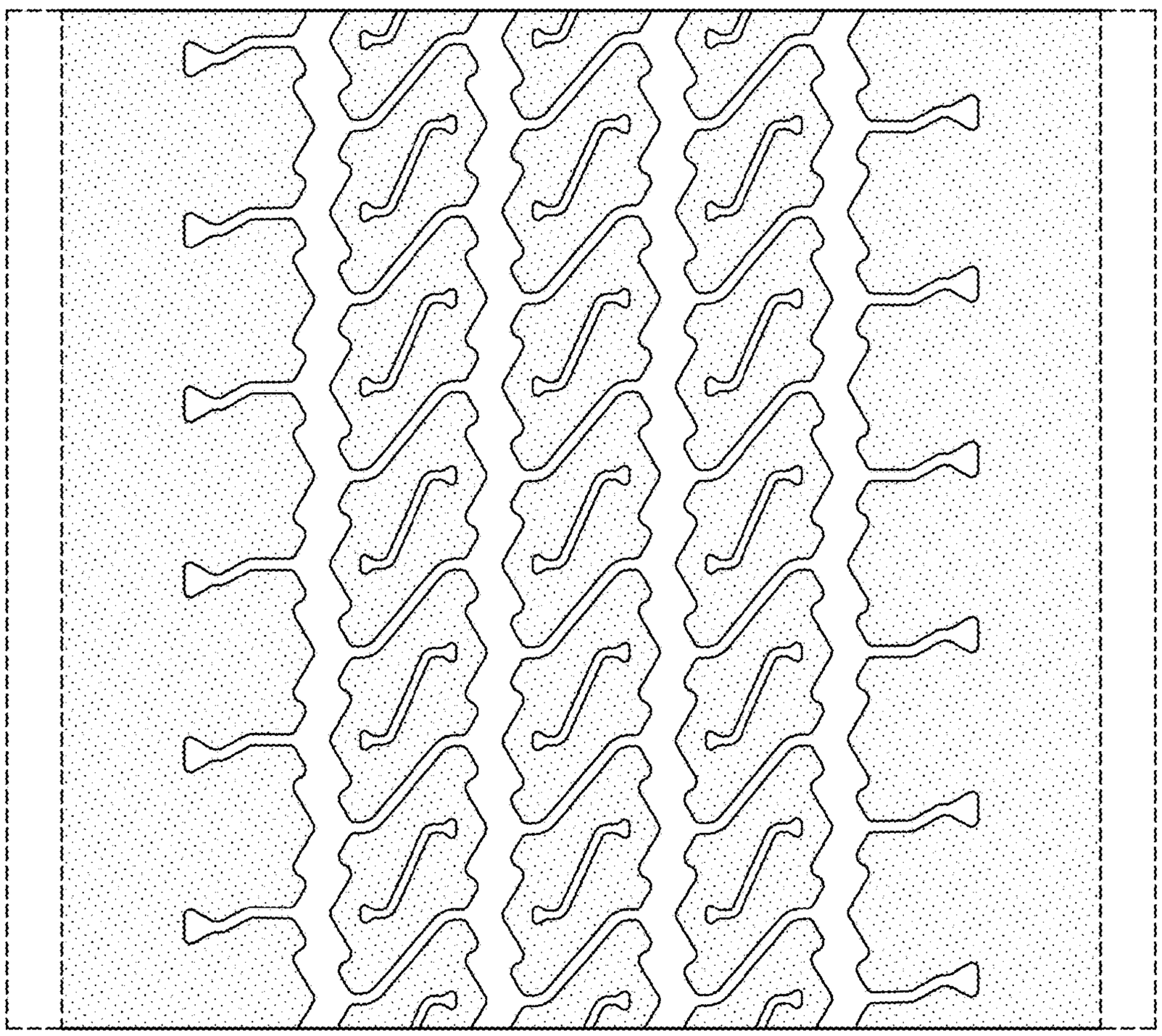

FIG-4