US00D781220S

(12) United States Design Patent

Scheifele et al.

(10) Patent No.: US D781,220 S
(45) Date of Patent: ** Mar. 14, 2017

(54) **TIRE TREAD**

(71) Applicant: **Bridgestone Americas Tire Operations, LLC**, Nashville, TN (US)

(72) Inventors: **Kevin E. Scheifele**, Atwater, OH (US); **Andrew T. Miklic**, Akron, OH (US); **David M. Severyn**, North Canton, OH (US)

(73) Assignee: **Bridgestone Americas Tire Operations, LLC**, Nashville, TN (US)

(**) Term: **15 Years**

(21) Appl. No.: **29/558,863**

(22) Filed: **Mar. 22, 2016**

(51) **LOC (10) Cl.** **12-15**

(52) **U.S. Cl.**
USPC **D12/579**

(58) **Field of Classification Search**
USPC D12/568–604, 900
CPC B60C 1/0016; B60C 11/0306; B60C 11/0302; B60C 3/06; B60C 9/17
See application file for complete search history.

(56) **References Cited**

U.S. PATENT DOCUMENTS

4,955,415	A	9/1990	Takeuchi et al.
5,287,905	A	2/1994	Caretta et al.
5,327,953	A	7/1994	Ichiki
5,343,914	A	9/1994	Wako
D354,034	S	1/1995	McKisson
5,421,387	A	6/1995	Emerson
D372,006	S	7/1996	Labbe
5,538,060	A	7/1996	van der Meer et al.
5,580,404	A	12/1996	Hitzky
5,582,661	A	12/1996	Winter
D380,424	S	7/1997	Brown et al.
D380,999	S	7/1997	Lurois et al.
D384,608	S	10/1997	Schuster
D384,623	S	10/1997	Schuster
D384,917	S	10/1997	Miura
D385,520	S	10/1997	Scheuren et al.
D385,522	S	10/1997	Ratliff, Jr.
D391,537	S	3/1998	Maxwell
D397,646	S	9/1998	Labbe et al.
D397,652	S	9/1998	Le et al.
D397,969	S	9/1998	Hino
D400,136	S	10/1998	Heinen et al.
D405,733	S	2/1999	Robert
D411,152	S	6/1999	Hagmaier et al.
D414,449	S	9/1999	Schuster
6,000,450	A	12/1999	Kishimoto et al.

(Continued)

Primary Examiner — Robert M Spear
Assistant Examiner — John Voytek
(74) *Attorney, Agent, or Firm* — Shaun J. Fox

(57) **CLAIM**

The ornamental design for a tire tread, as shown and described.

DESCRIPTION

FIG. **1** is a side perspective view of a tire tread showing our new design, it being understood that the tread pattern is repeated throughout the circumference of the tire tread, the opposite side being the same as that shown;
FIG. **2** is a front elevational view thereof, the opposite side being identical thereto; and,
FIG. **3** is an enlarged fragmentary front elevational view thereof.
The broken lines defining the sidewall, inner bead, shoulder ribs, tread lug walls, and the peripheral boundary between the claimed tire tread and the sidewall depict environmental subject matter that forms no part of the claimed design.

1 Claim, 3 Drawing Sheets

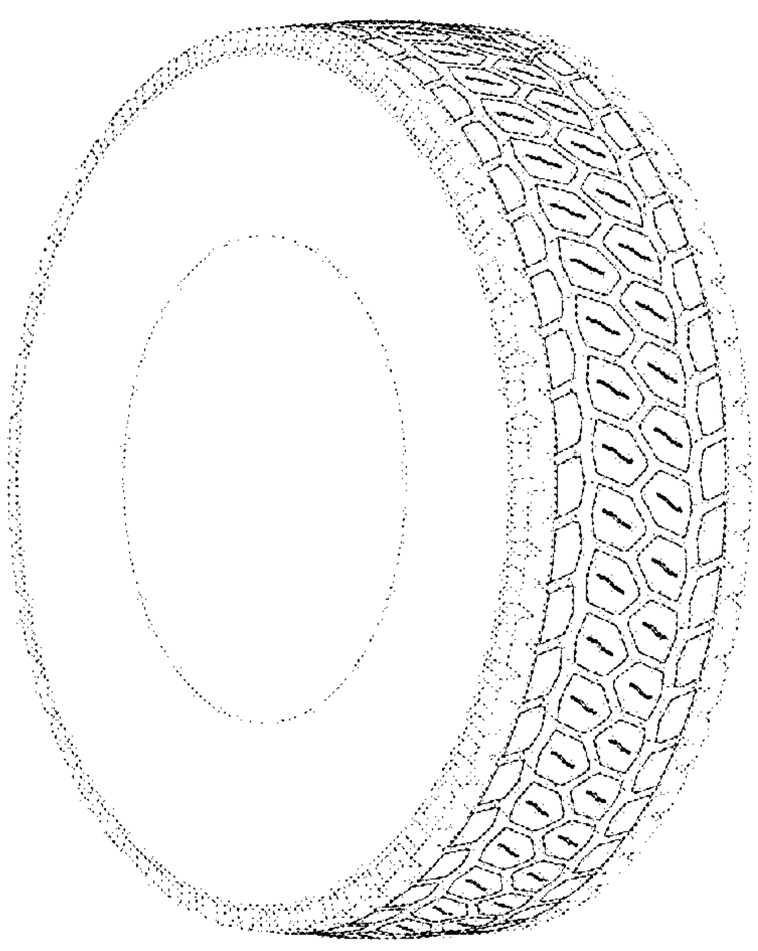

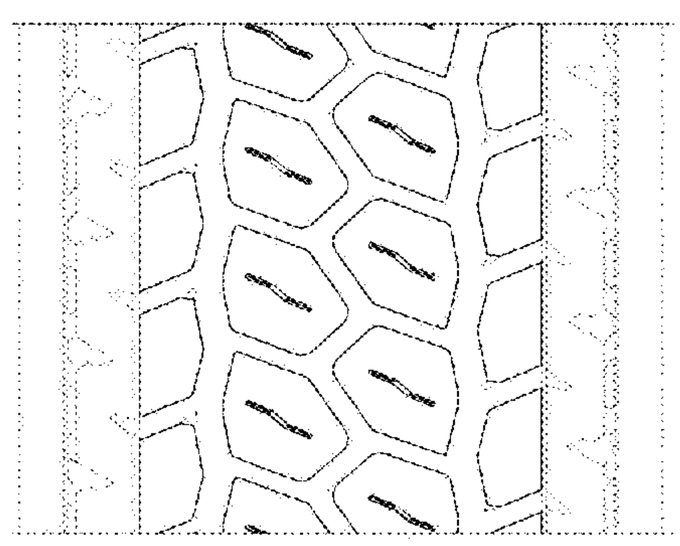

(56) **References Cited**

U.S. PATENT DOCUMENTS

6,000,451	A		12/1999	Takada	
D420,630	S		2/2000	De Coninck et al.	
D420,951	S		2/2000	Cai	
D420,956	S		2/2000	Rodicq et al.	
D421,583	S		3/2000	Kemp, Jr.	
6,065,517	A		5/2000	Maruyama	
6,105,643	A		8/2000	Rohweder et al.	
6,170,546	B1		1/2001	Kaeb et al.	
D437,265	S		2/2001	Hagmaier et al.	
D444,109	S		6/2001	De Coninck et al.	
D454,535	S		3/2002	Kemp, Jr.	
D454,836	S		3/2002	Ford-Smith et al.	
D456,320	S		4/2002	Hutz et al.	
D457,128	S	*	5/2002	Robert	D12/579
D457,490	S		5/2002	Welbes	
D458,584	S		6/2002	Young et al.	
D458,896	S		6/2002	Kemp, Jr.	
D460,405	S		7/2002	Schmidt	
6,443,199	B1		9/2002	Scarpitti et al.	
D470,455	S		2/2003	Kemp, Jr.	
D471,512	S		3/2003	Weaver	
D472,202	S		3/2003	Gillard	
D474,147	S		5/2003	Zurita	
D475,010	S		5/2003	Takei et al.	
D493,415	S		7/2004	Noailly	
D496,329	S		9/2004	Thomas et al.	
D498,455	S		11/2004	Nonaka	
D499,067	S		11/2004	Wage	
D499,695	S		12/2004	Tanabe et al.	
D500,285	S		12/2004	Ikeda	
D500,472	S		1/2005	Campana et al.	
D501,446	S		2/2005	Wage	
D512,370	S	*	12/2005	Pang	D12/579
D512,684	S		12/2005	Robert	
D514,504	S		2/2006	Robert	
D516,015	S		2/2006	Ikeda	
D530,265	S		10/2006	Hutz et al.	
D530,266	S		10/2006	Hutz et al.	
D537,032	S		2/2007	Lebreton	
D541,733	S		5/2007	Lhospitalier	
D548,174	S		8/2007	Souchet	
D556,125	S		11/2007	Blackiston et al.	
D557,654	S		12/2007	Yamaguchi	
D558,664	S		1/2008	Herbeuval et al.	
D563,861	S		3/2008	Foucher	
D570,767	S		6/2008	Miyazaki et al.	
D577,660	S		9/2008	Durand	
D583,312	S		12/2008	Murphy et al.	
D583,755	S		12/2008	Takahashi	
D584,216	S		1/2009	Patterson	
D584,220	S		1/2009	Fujita	
D589,431	S		3/2009	Fontaine et al.	
D590,330	S		4/2009	Miyazaki	
D595,641	S		7/2009	Carter et al.	
D598,369	S		8/2009	Beha	
D606,005	S	*	12/2009	Cerny	D12/544
D606,010	S		12/2009	Martin et al.	
D609,166	S		2/2010	Brown	
D610,073	S		2/2010	Laroche	
D610,968	S		3/2010	Godeau et al.	
D610,974	S		3/2010	Hagiwara	
D615,487	S		5/2010	Harle	
D615,921	S		5/2010	Cerny	
D618,613	S	*	6/2010	Vandaele	D12/600
D619,083	S		7/2010	Reim et al.	
D619,528	S		7/2010	Sakamoto	
D622,211	S		8/2010	Maus et al.	
7,836,926	B2		11/2010	Suzuki	
D628,954	S		12/2010	Shan et al.	
D631,002	S		1/2011	Cazin-Bourguignon et al.	
7,874,332	B2		1/2011	Hayashi	
D633,032	S		2/2011	Su	
D636,722	S	*	4/2011	Davidson	D12/602
D641,314	S	*	7/2011	Strader	D12/583
D641,684	S		7/2011	Cerny	
7,980,279	B2		7/2011	Takahashi	
D643,802	S		8/2011	Sareen	
D645,398	S		9/2011	Kiwaki	
8,042,584	B2		10/2011	Takahashi	
D647,842	S	*	11/2011	Aoki	D12/602
D648,261	S		11/2011	Rayman	
D649,927	S	*	12/2011	Cerny	D12/544
D661,639	S		6/2012	Carter et al.	
D661,643	S		6/2012	Kaji	
D669,022	S		10/2012	Kiwaki	
8,336,590	B2		12/2012	Takahashi et al.	
D675,559	S	*	2/2013	Yamada	D12/579
8,381,782	B2		2/2013	Takahashi et al.	
8,627,864	B2		1/2014	Ochi et al.	
8,640,750	B2		2/2014	Kageyama	
D700,883	S		3/2014	Sareen	
8,739,847	B2		6/2014	Shibano	
8,783,312	B2		7/2014	Yamada	
D710,296	S	*	8/2014	Bani Hani	D12/583
8,800,616	B2		8/2014	Koutoku	
8,851,130	B2		10/2014	Shimizu	
D735,119	S	*	7/2015	Hermann	D12/578
D762,556	S	*	8/2016	Dixon	D12/583
D766,169	S	*	9/2016	Fujioka	D12/596
2001/0054463	A1		12/2001	Matsuura et al.	
2004/0211502	A1		10/2004	Ono	
2006/0060276	A1		3/2006	Hashimoto et al.	
2006/0207700	A1		9/2006	Palombo	
2007/0163693	A1		7/2007	Suganuma	
2007/0199633	A1		8/2007	Hayashi	
2008/0047644	A1		2/2008	Yoshikawa et al.	
2012/0145295	A1		6/2012	Yamada	
2014/0158261	A1		6/2014	Takahashi	

* cited by examiner

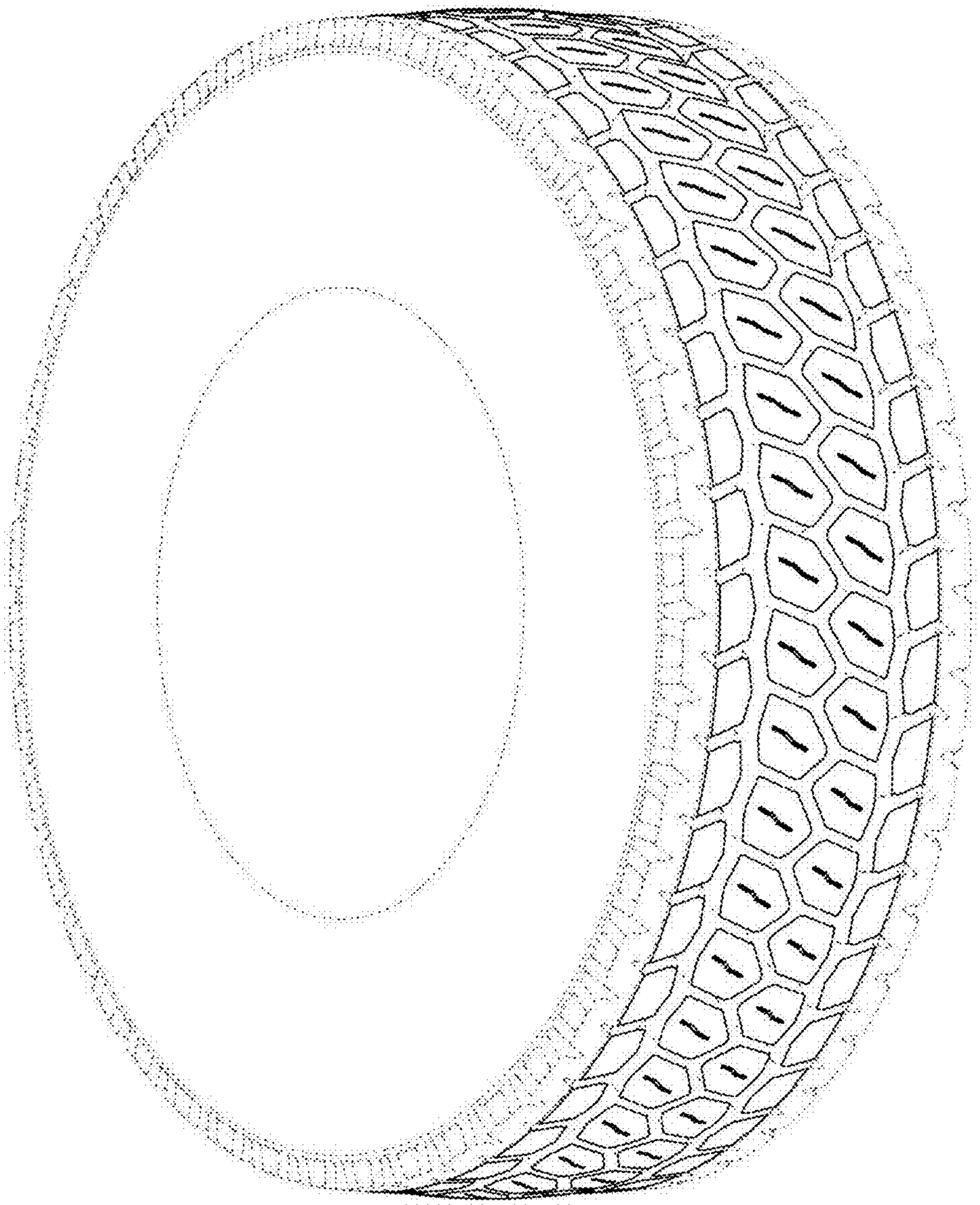

Fig. 1

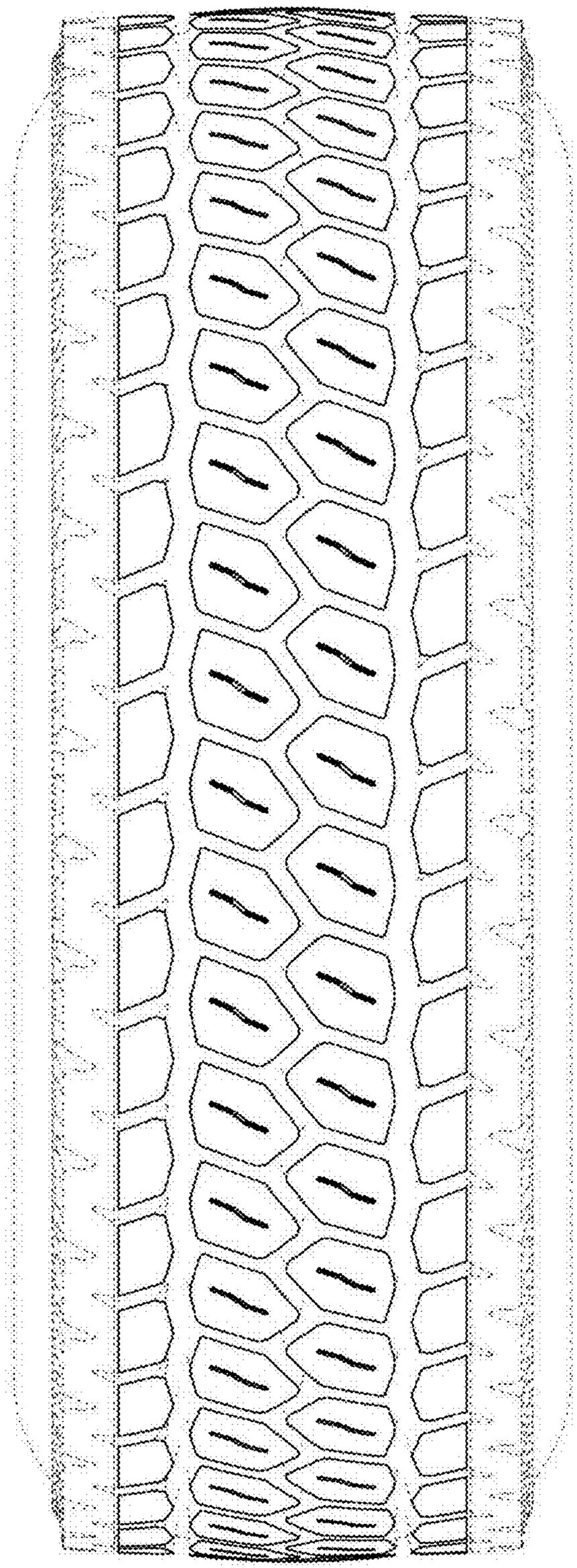

Fig. 2

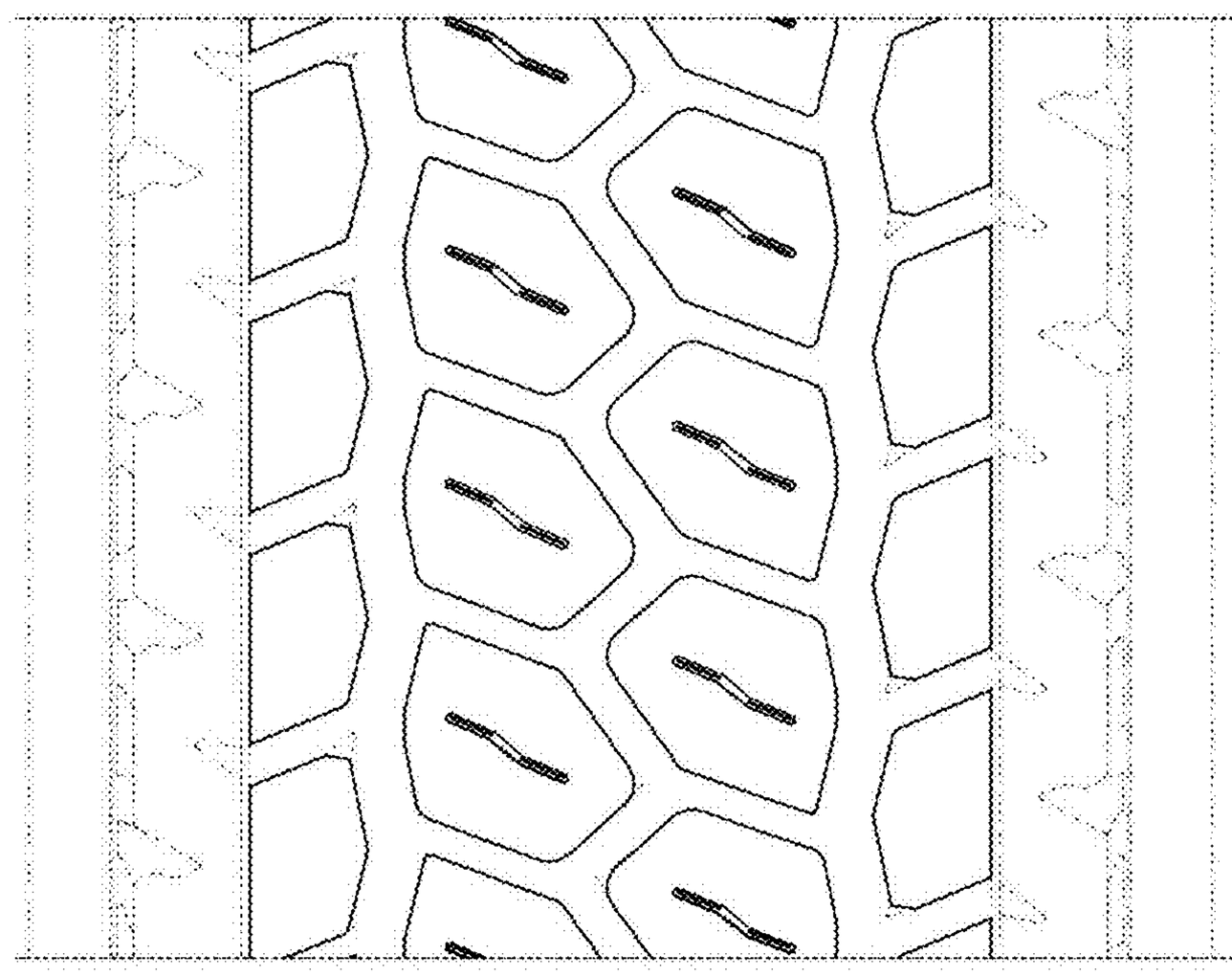

Fig. 3