US00D781165S

(12) United States Design Patent

Rouillac et al.

(10) Patent No.: US D781,165 S
(45) Date of Patent: ** Mar. 14, 2017

(54) **WEIGHT SCALE**

(71) Applicant: **HTC Corporation**, Taoyuan (TW)

(72) Inventors: **Nichole Suzanne Rouillac**, San Francisco, CA (US); **Luane Rowe**, San Francisco, CA (US); **Maxime David Eric Dubreucq**, San Francisco, CA (US); **Lawrence Herman Fong**, San Francisco, CA (US); **Gene Woo Nam**, San Francisco, CA (US); **Chi Jen Lu**, San Francisco, CA (US); **Jenny Yoon Joo Lee**, San Francisco, CA (US); **Christina L. Ng**, San Francisco, CA (US)

(73) Assignee: **HTC Corporation**, Taoyuan (TW)

(**) Term: **15 Years**

(21) Appl. No.: **29/541,194**

(22) Filed: **Oct. 1, 2015**

(51) **LOC (10) Cl.** **10-04**

(52) **U.S. Cl.**
USPC **D10/92**; D10/91

(58) **Field of Classification Search**
USPC D10/87, 88, 89, 90, 91, 92, 93, 94
CPC A61B 5/053; A61B 5/4872; A61B 5/0537; A61B 5/4869; A61B 5/6825; A61B 5/6829; A61B 5/7445; G01G 19/44; G01G 19/445; G01G 19/46; G01G 19/48; G01G 19/50;

(Continued)

(56) **References Cited**

U.S. PATENT DOCUMENTS

D458,552 S * 6/2002 Ekelund D10/91
D600,581 S * 9/2009 Brown D10/91

(Continued)

Primary Examiner — Antoine D Davis

(74) *Attorney, Agent, or Firm* — Jianq Chyun IP Office

(57) **CLAIM**

The ornamental design for a weight scale, as shown and described.

DESCRIPTION

FIG. **1** is a perspective view of a weight scale showing a first embodiment of my new design;
FIG. **2** is another perspective view of the first embodiment;
FIG. **3** is a front view of the first embodiment;
FIG. **4** is a rear view of the first embodiment;
FIG. **5** is a left view of the first embodiment;
FIG. **6** is a right view of the first embodiment;
FIG. **7** is a top view of the first embodiment;
FIG. **8** is a bottom view of the first embodiment;
FIG. **9** is a perspective view of a weight scale showing a second embodiment of my new design;
FIG. **10** is another perspective view of the second embodiment;
FIG. **11** is a front view of the second embodiment;
FIG. **12** is a rear view of the second embodiment;
FIG. **13** is a left view of the second embodiment;
FIG. **14** is a right view of the second embodiment;
FIG. **15** is a top view of the second embodiment; and,
FIG. **16** is a bottom view of the second embodiment.
The broken line portions of the weight scale form no part of the claimed design.

1 Claim, 12 Drawing Sheets

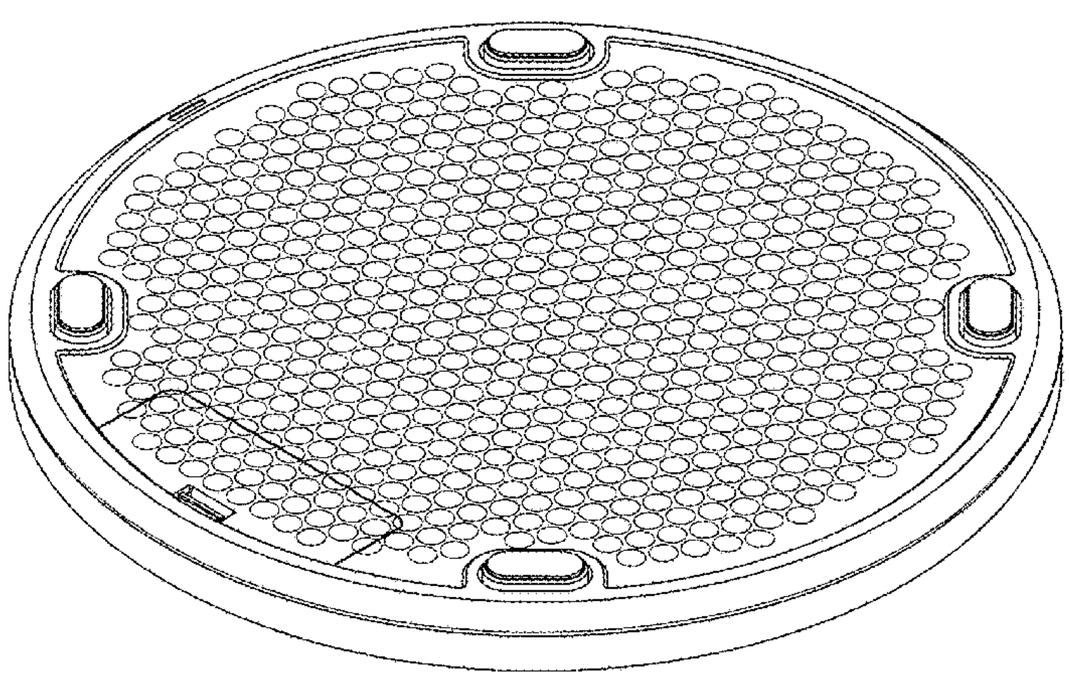

(58) **Field of Classification Search**
CPC G01G 21/28; G01G 21/283; G01G 19/286; G01G 19/30
See application file for complete search history.

(56) **References Cited**

U.S. PATENT DOCUMENTS

D700,093 S * 2/2014 Gomez D10/91
D737,706 S * 9/2015 Peluso D10/92

* cited by examiner

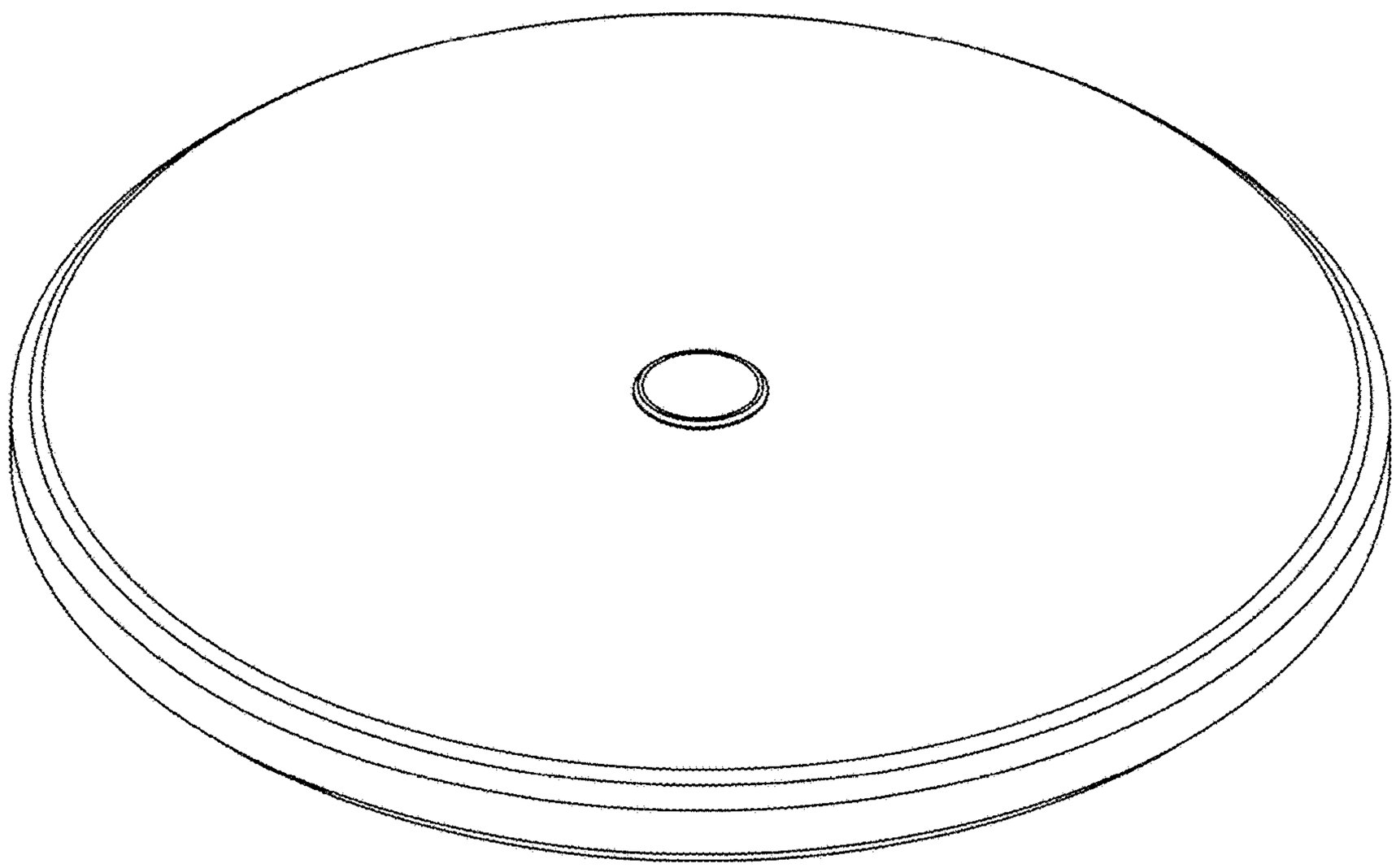

FIG. 1

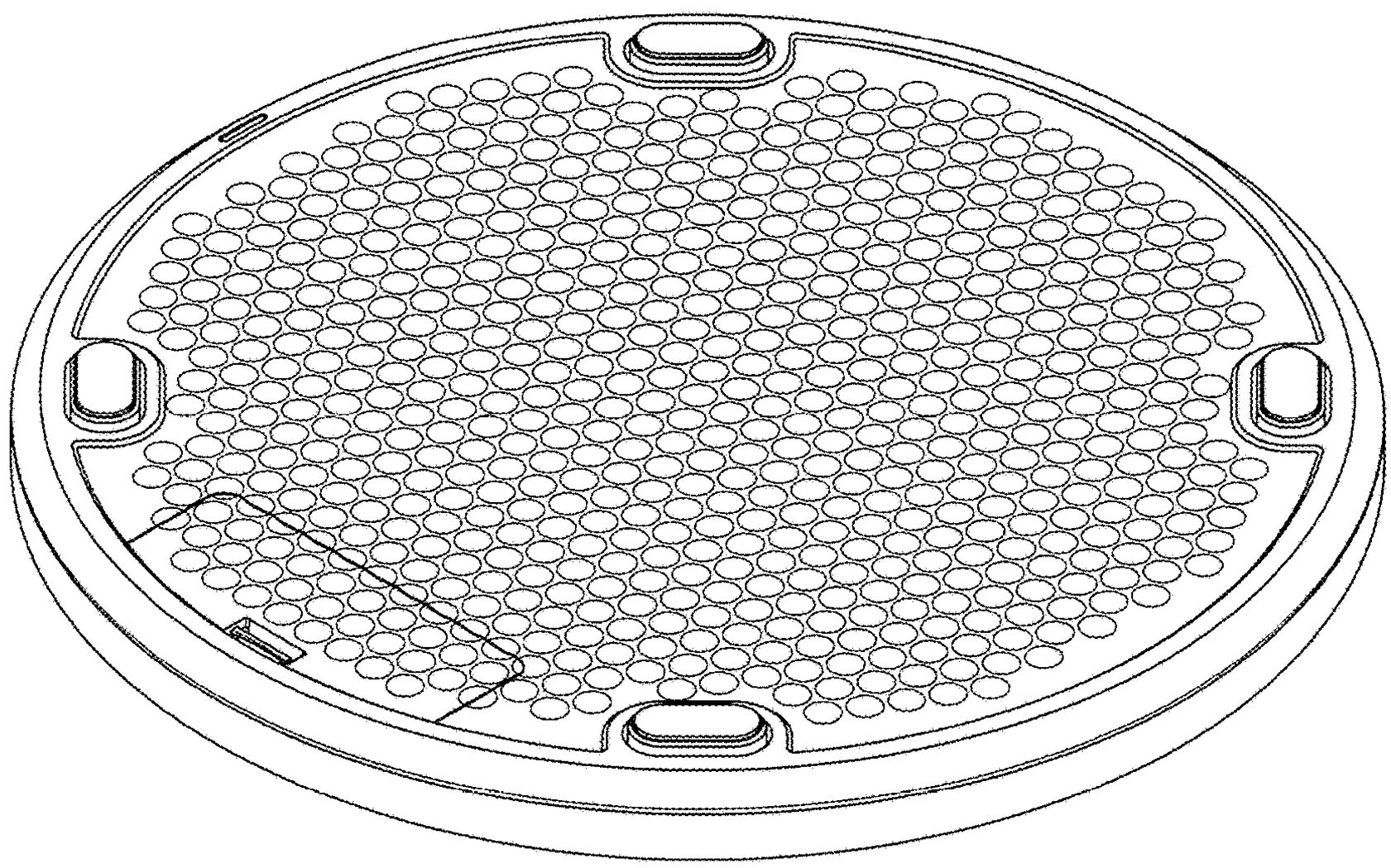

FIG. 2

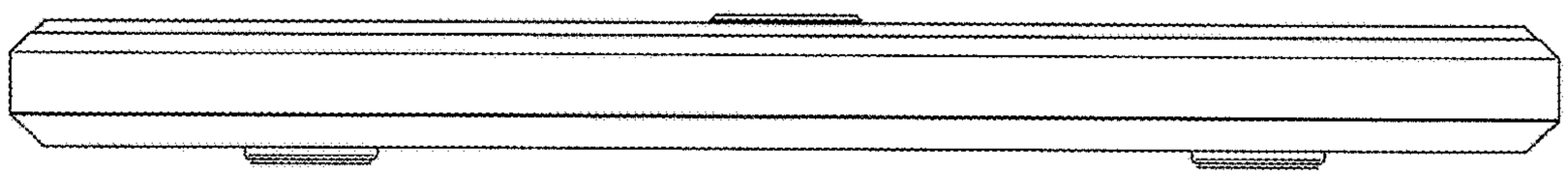

FIG. 3

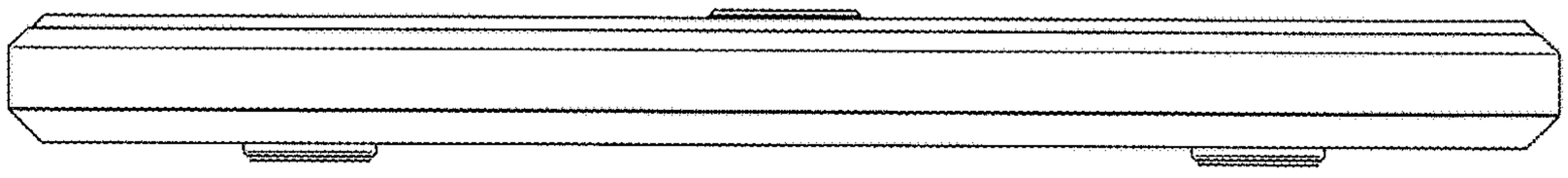

FIG. 4

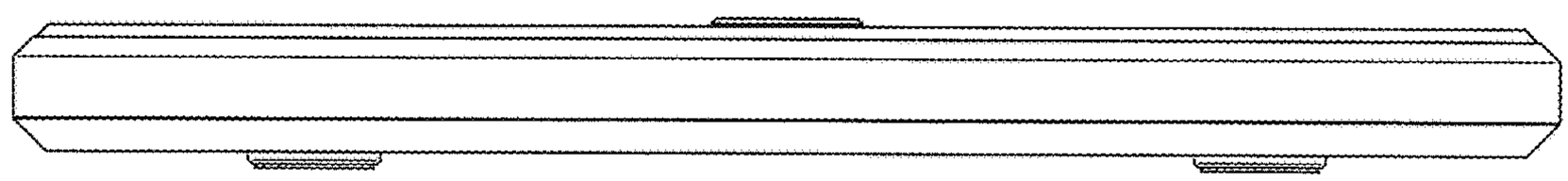

FIG. 5

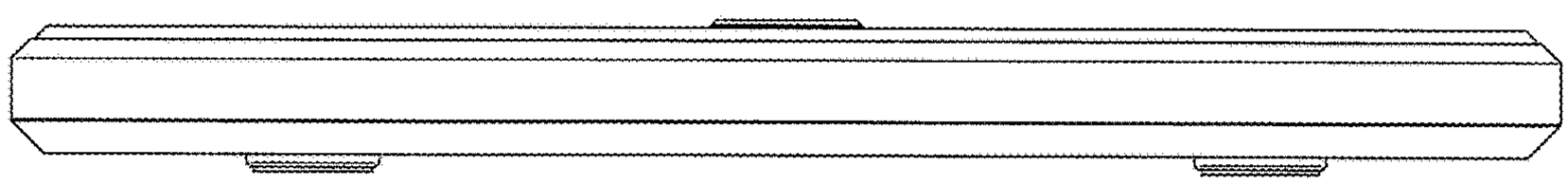

FIG. 6

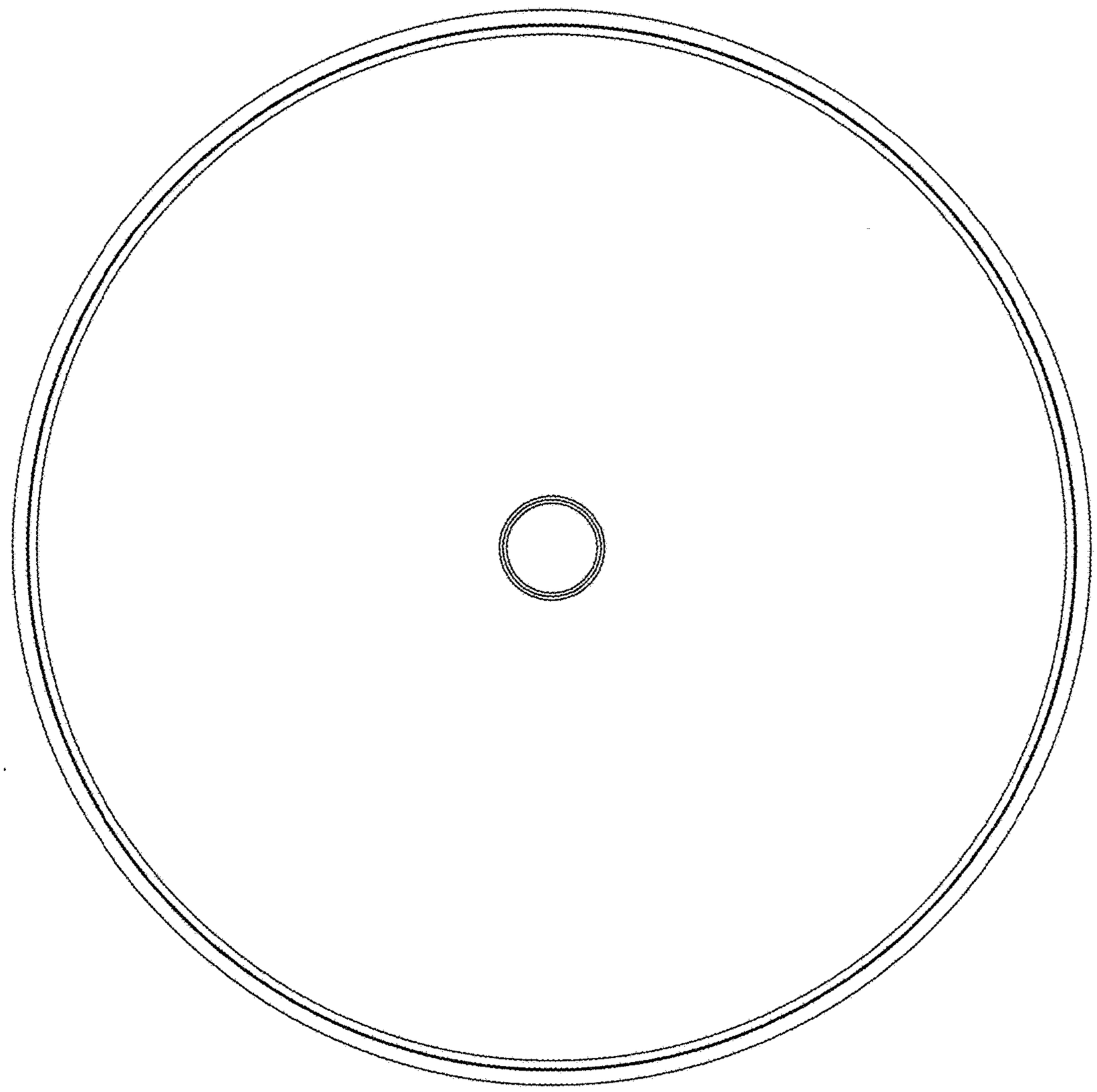

FIG. 7

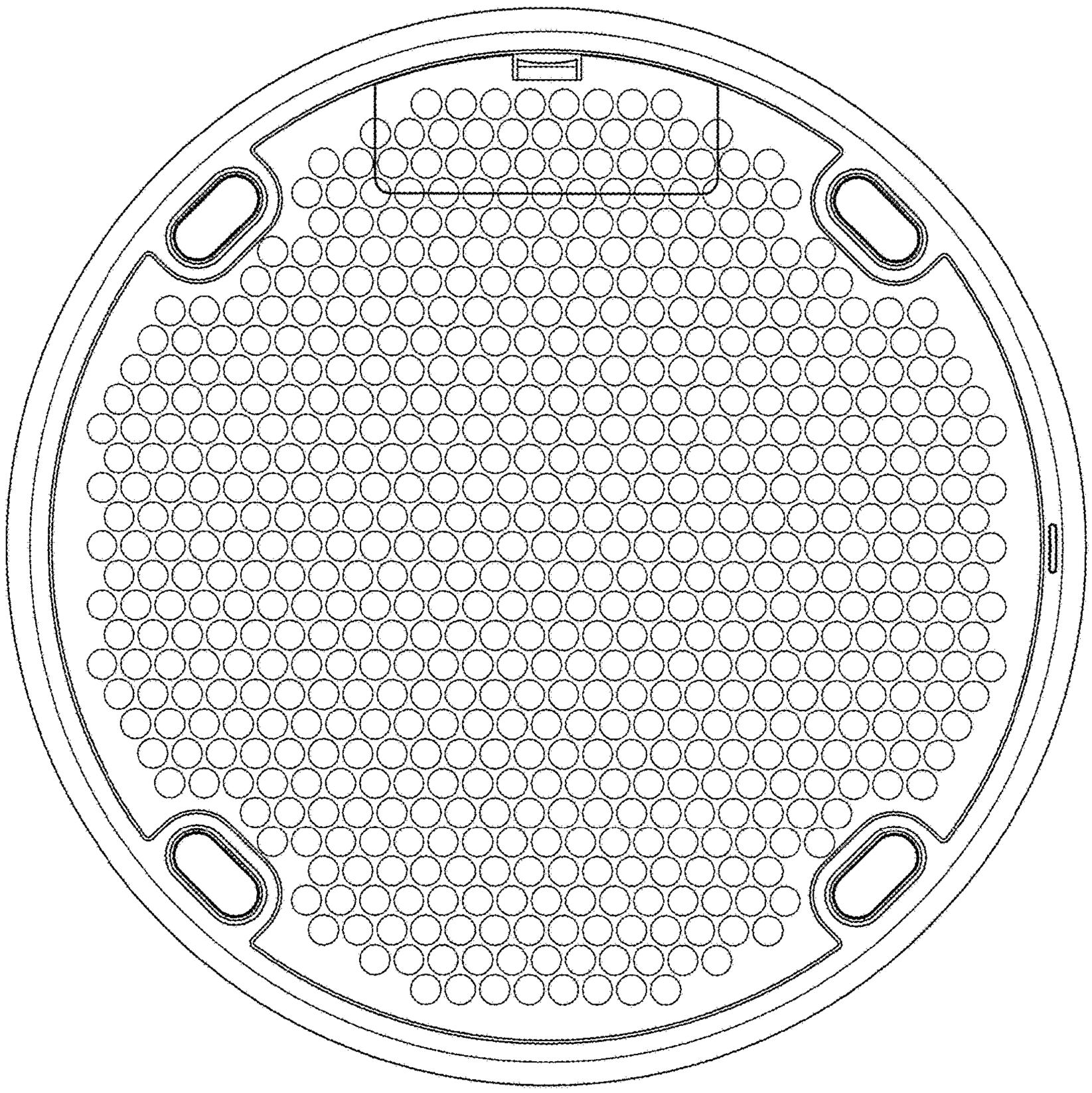

FIG. 8

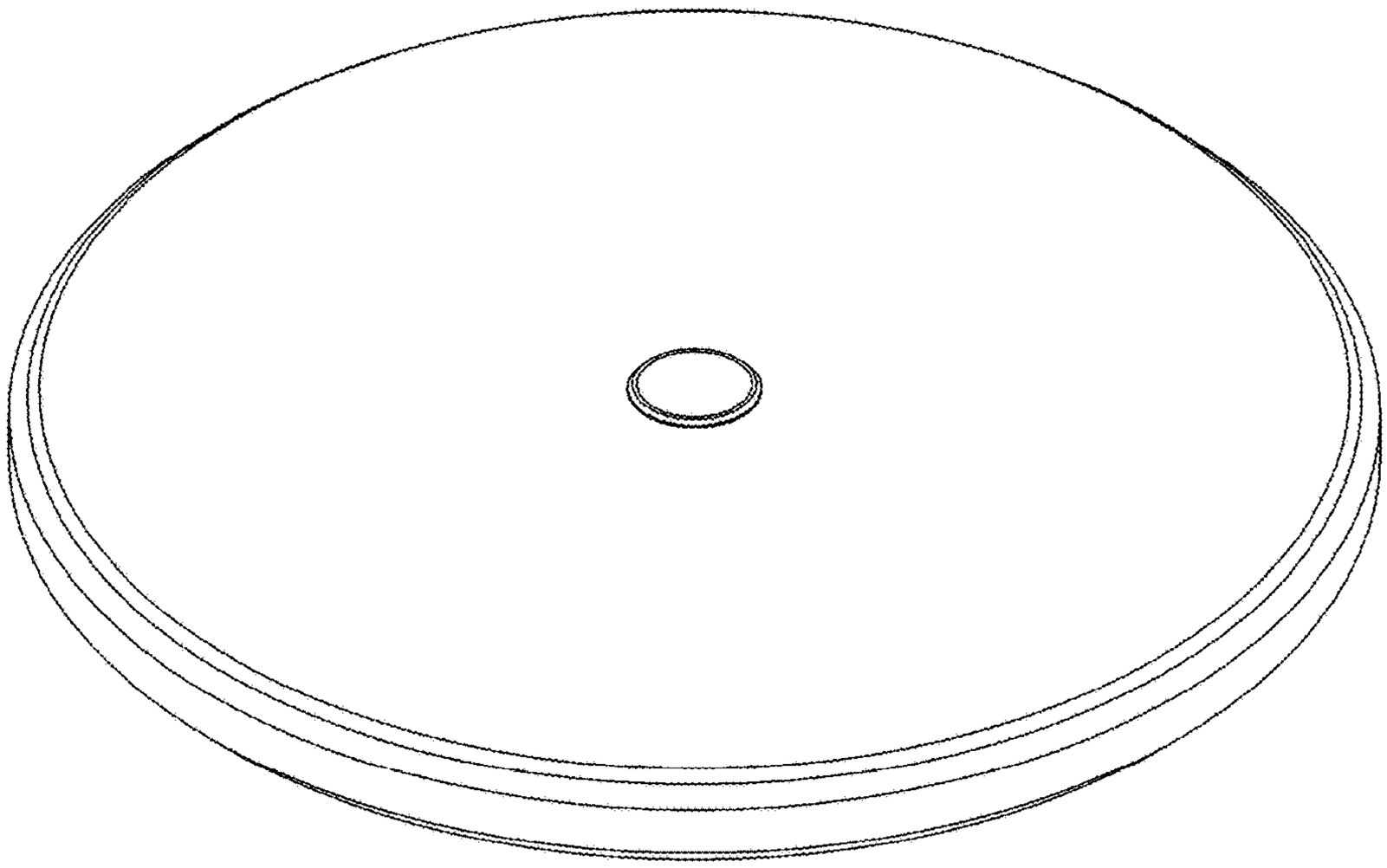

FIG. 9

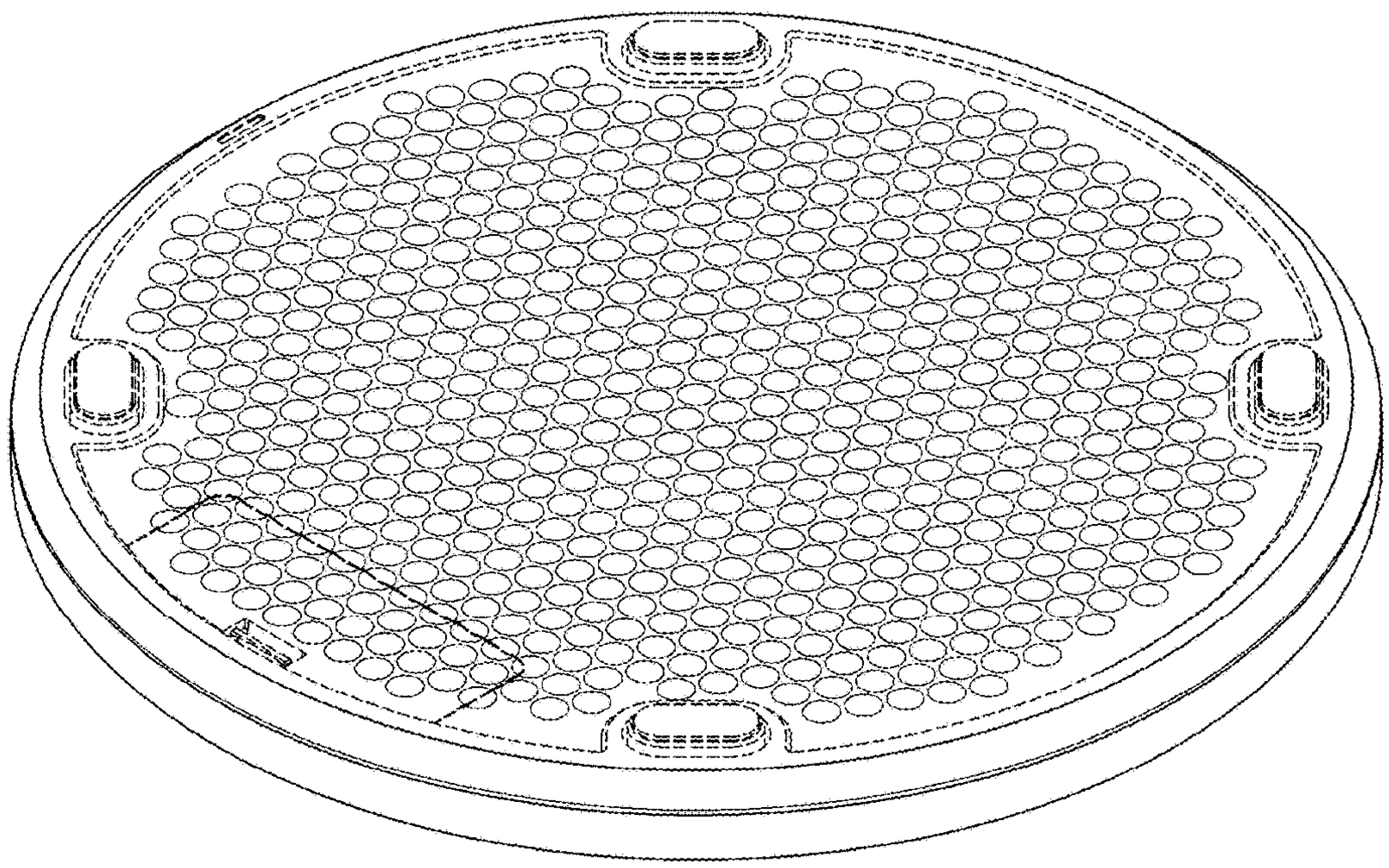

FIG. 10

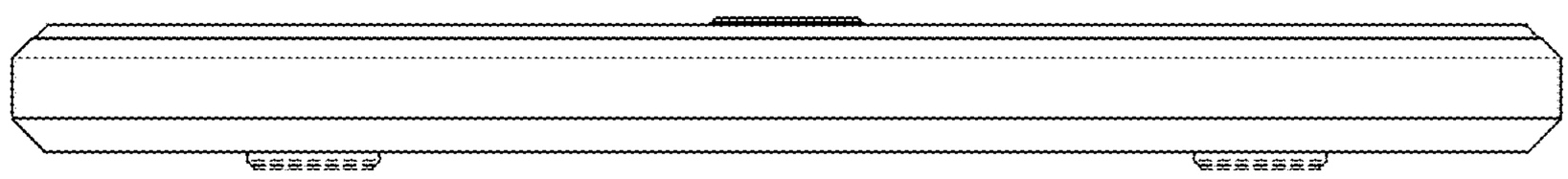

FIG. 11

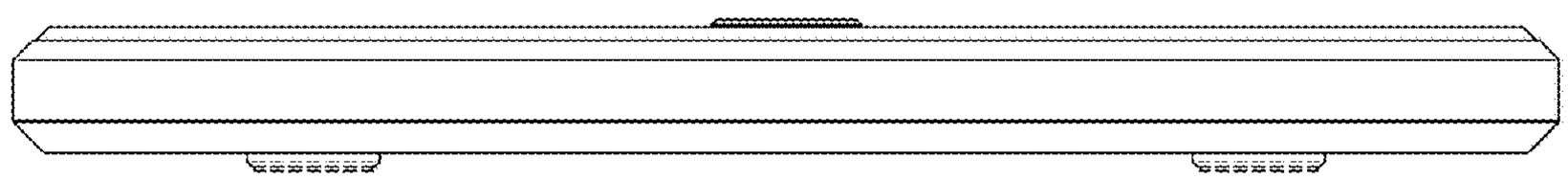

FIG. 12

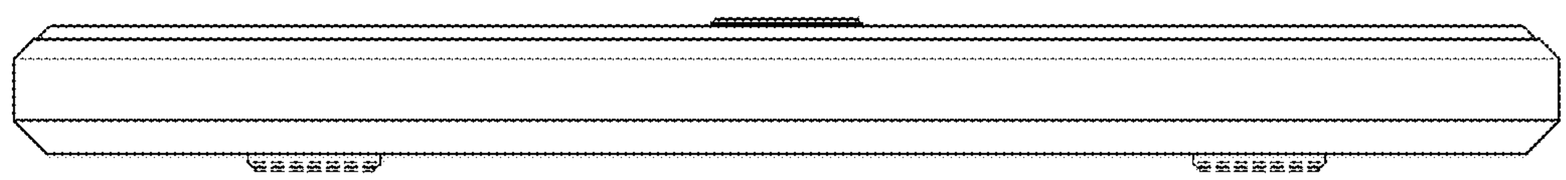

FIG. 13

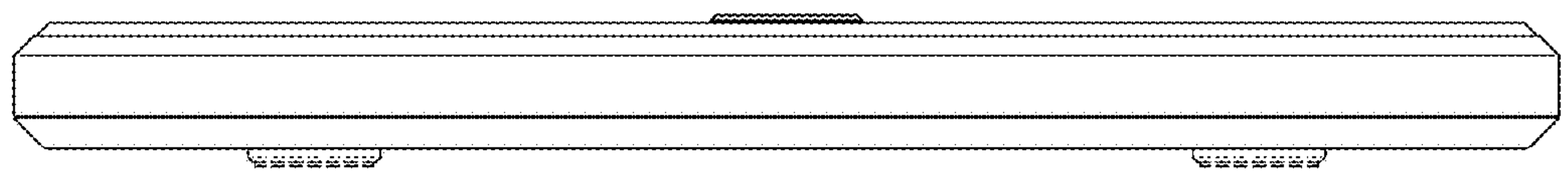

FIG. 14

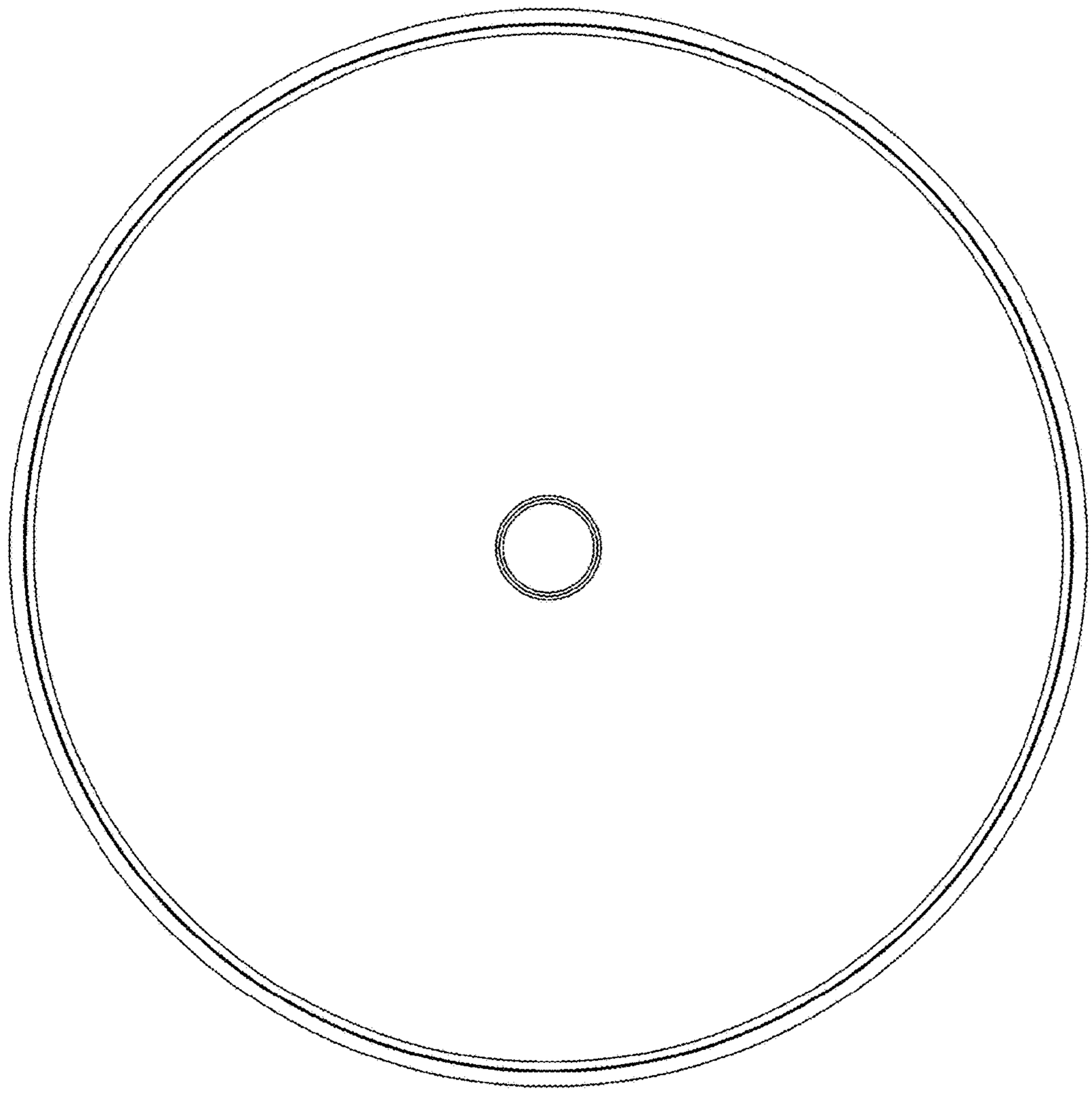

FIG. 15

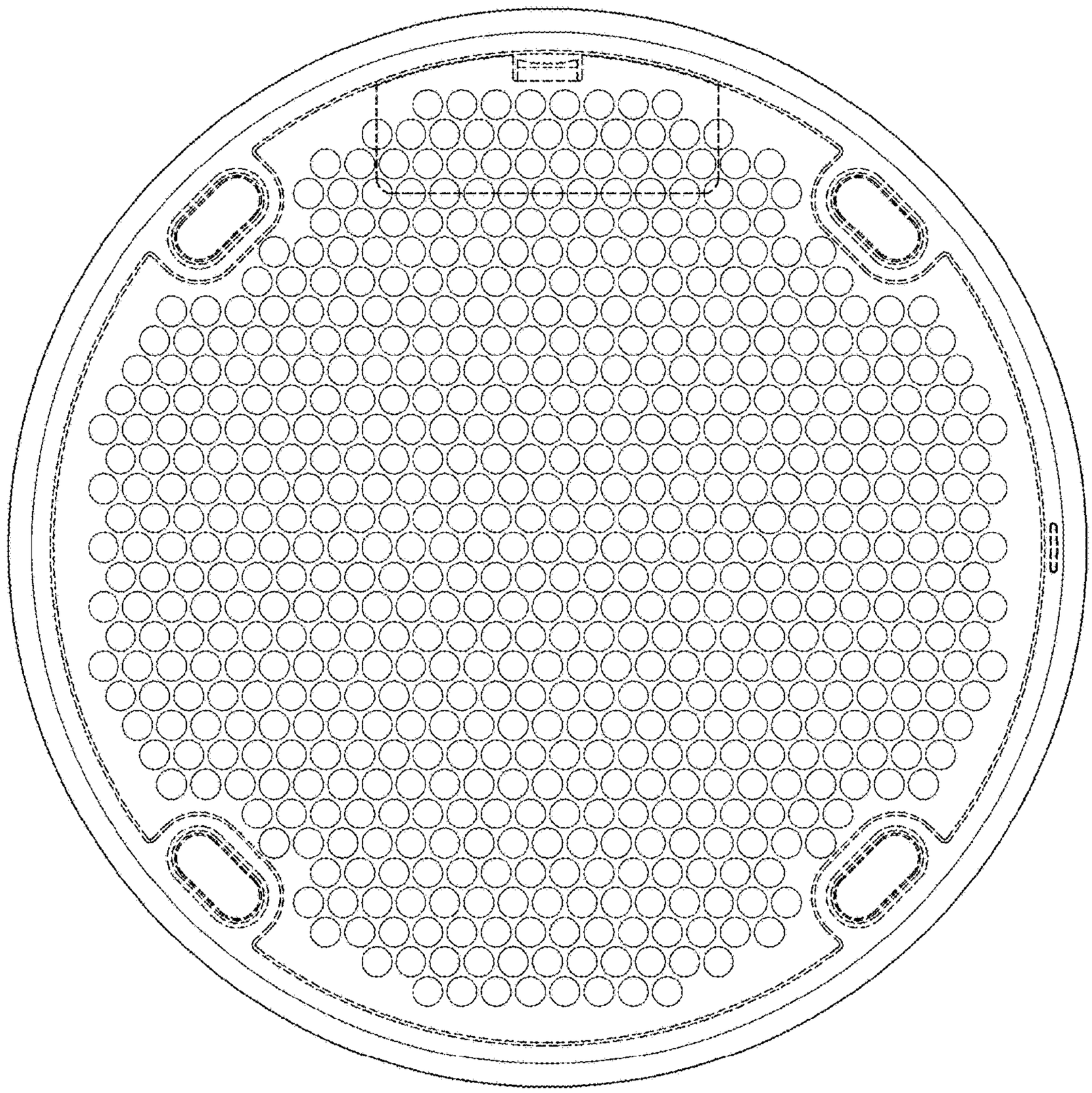

FIG. 16