US00D780225S

(12) United States Design Patent

Hashimoto

(10) Patent No.: US D780,225 S
(45) Date of Patent: ** Feb. 28, 2017

(54) **INTERNAL-COMBUSTION ENGINE**

(71) Applicant: **Honda Motor Co., Ltd.**, Tokyo (JP)

(72) Inventor: **Misako Hashimoto**, Wako (JP)

(73) Assignee: **HONDA MOTOR CO., LTD.**, Tokyo (JP)

(**) Term: **15 Years**

(21) Appl. No.: **29/540,438**

(22) Filed: **Sep. 24, 2015**

(30) **Foreign Application Priority Data**

Mar. 31, 2015 (JP) 2015-007116

(51) **LOC (10) Cl.** **15-01**

(52) **U.S. Cl.**
USPC **D15/1**

(58) **Field of Classification Search**
USPC ..... D15/1–6; D13/184, 112; 123/195 C
CPC F02B 75/007; F02B 61/02; F02B 75/005; F02B 2075/022; F02B 75/16; F02B 2075/1808; F02B 75/34; F02B 77/02; F02B 2700/03; F02B 2710/03; F02B 2730/011; F02B 63/02; F02B 2075/027; F02B 2075/1816; F02B 2075/1824; F02B 2063/045; F01M 13/022; F01M 2013/0461; F01M 13/04; F02F 7/0068; Y10S 55/14; F02M 35/0201
See application file for complete search history.

(56) **References Cited**

U.S. PATENT DOCUMENTS

D396,045	S	*	7/1998	Neeley	D15/1
D513,012	S	*	12/2005	Strandell	D15/5
D513,754	S	*	1/2006	Strandell	D15/5
D525,991	S	*	8/2006	Walters	D15/5
D531,638	S	*	11/2006	Drew	D15/1
D583,831	S	*	12/2008	Post	D15/5
D628,596	S	*	12/2010	Azuma	D15/1
D734,721	S	*	7/2015	Fujiwara	D13/112
2011/0017159	A1	*	1/2011	Schneiker	F01L 1/146 123/90.23
2011/0020151	A1	*	1/2011	Tiefenthaler	E01H 1/0809 417/363

(Continued)

Primary Examiner — T. Chase Nelson
Assistant Examiner — Ania Aman
(74) *Attorney, Agent, or Firm* — Westerman, Hattori, Daniels & Adrian, LLP

(57) **CLAIM**

The ornamental design for an internal-combustion engine, as shown and described.

DESCRIPTION

FIG. **1** is a first perspective view of an internal-combustion engine;
FIG. **2** is a second perspective view of the internal-combustion engine;
FIG. **3** is a front elevation view of the internal-combustion engine;
FIG. **4** is a rear elevation view of the internal-combustion engine;
FIG. **5** is a top plan view of the internal-combustion engine;
FIG. **6** is a bottom plan view of the internal-combustion engine;
FIG. **7** is a right side elevation view of the internal-combustion engine; and,
FIG. **8** is a left side elevation view of the internal-combustion engine.
In the drawings, the broken lines depict portions of the internal-combustion engine that form no part of the claimed design.

1 Claim, 8 Drawing Sheets

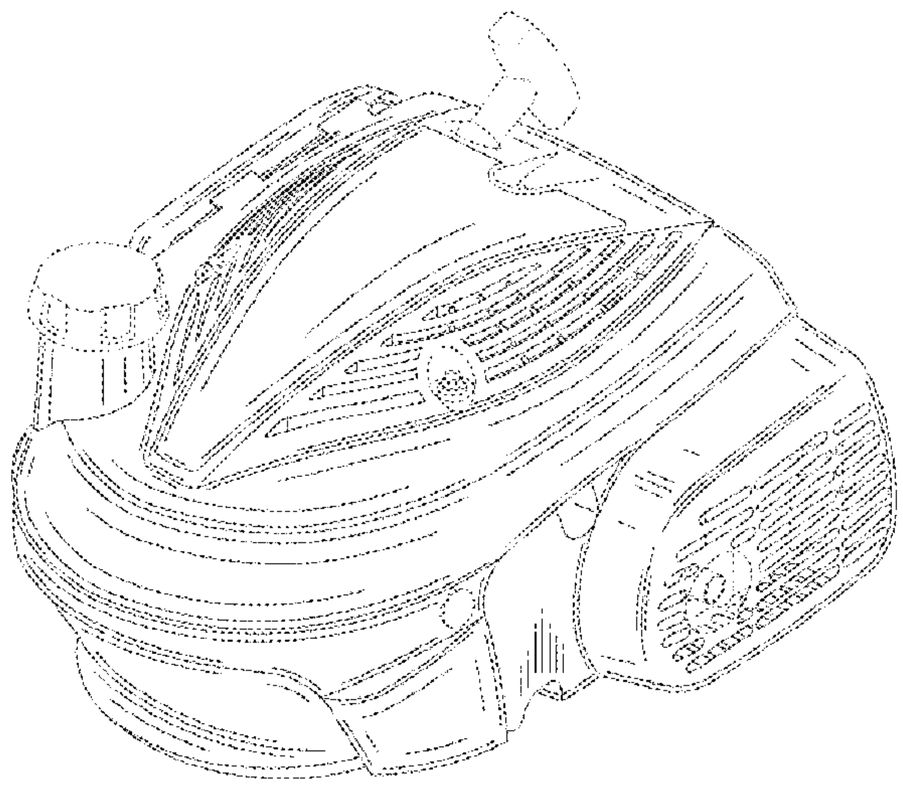

(56) **References Cited**

U.S. PATENT DOCUMENTS

2013/0019822	A1*	1/2013	Raasch	F02N 3/02 123/41.65
2015/0361932	A1*	12/2015	Kakuk	F02B 75/00 55/385.3

* cited by examiner

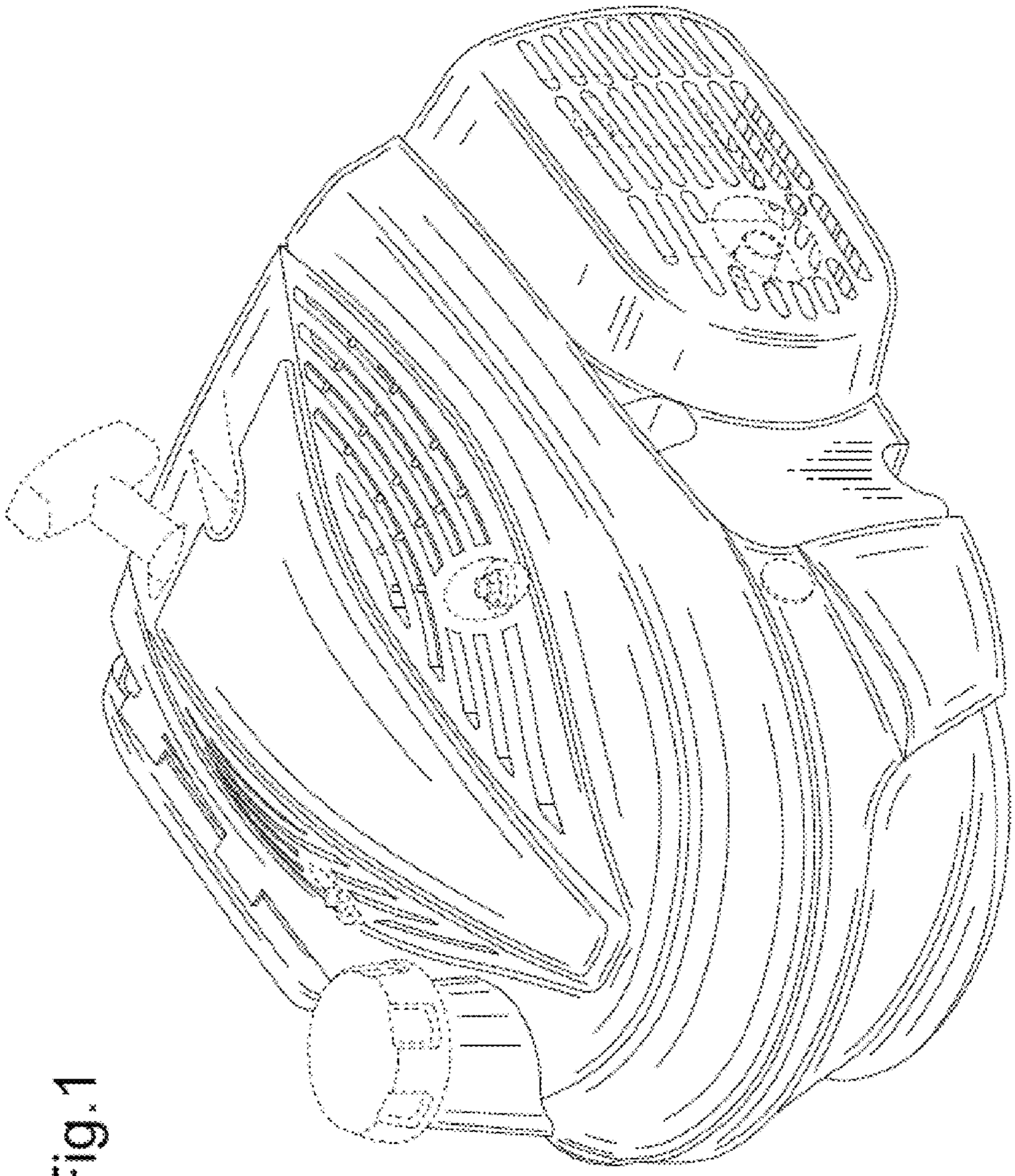

Fig.1

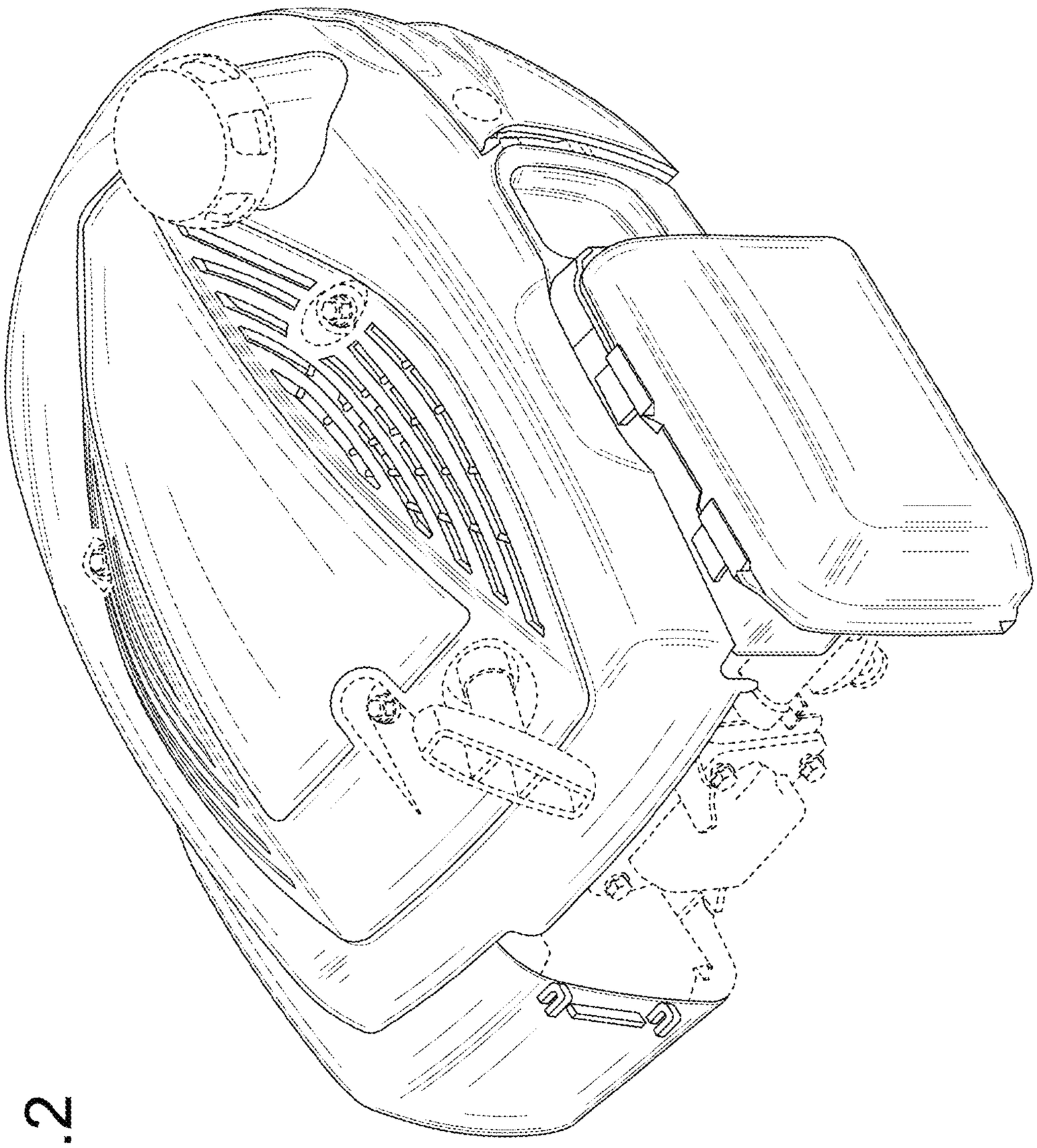

Fig.2

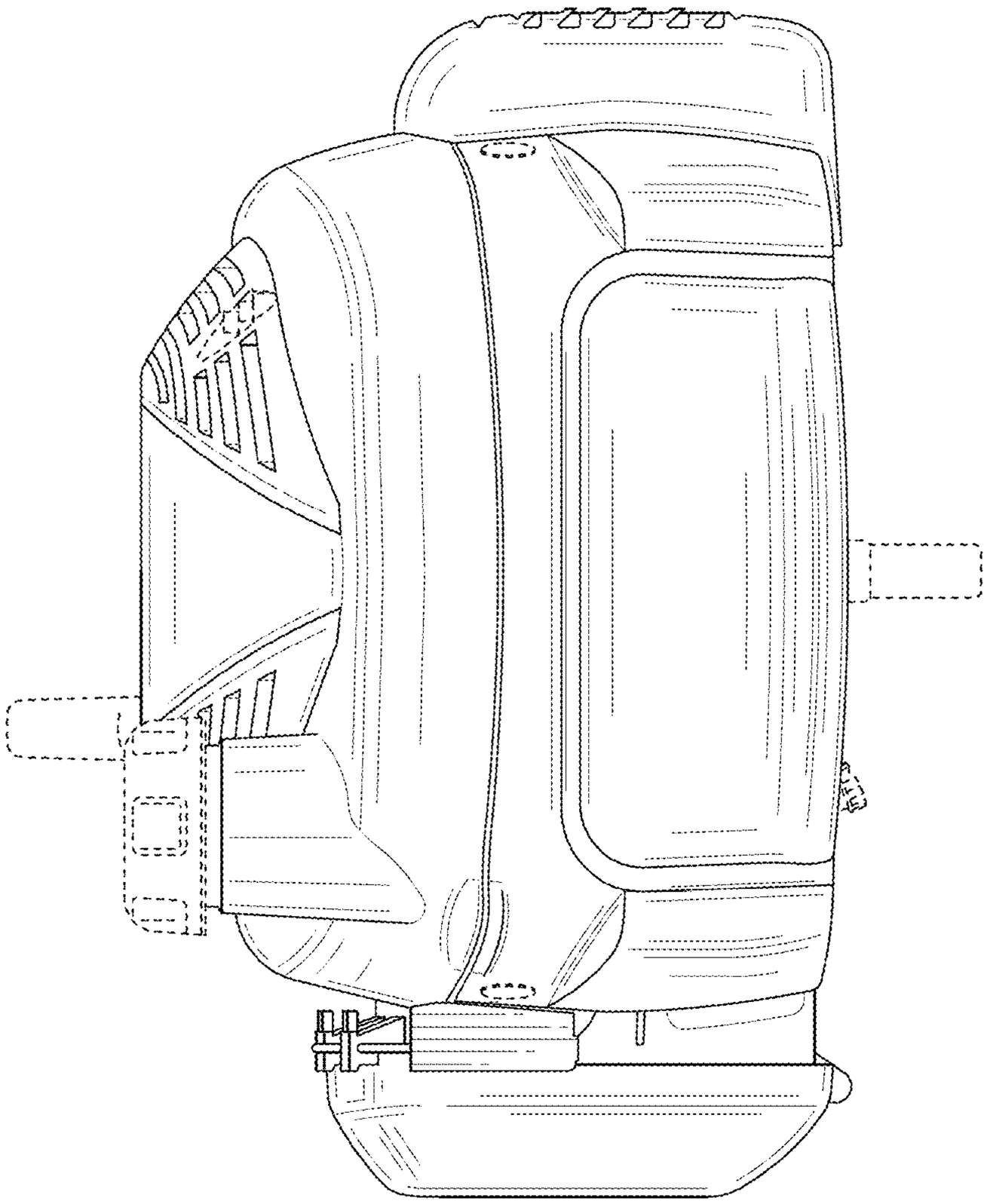

Fig.3

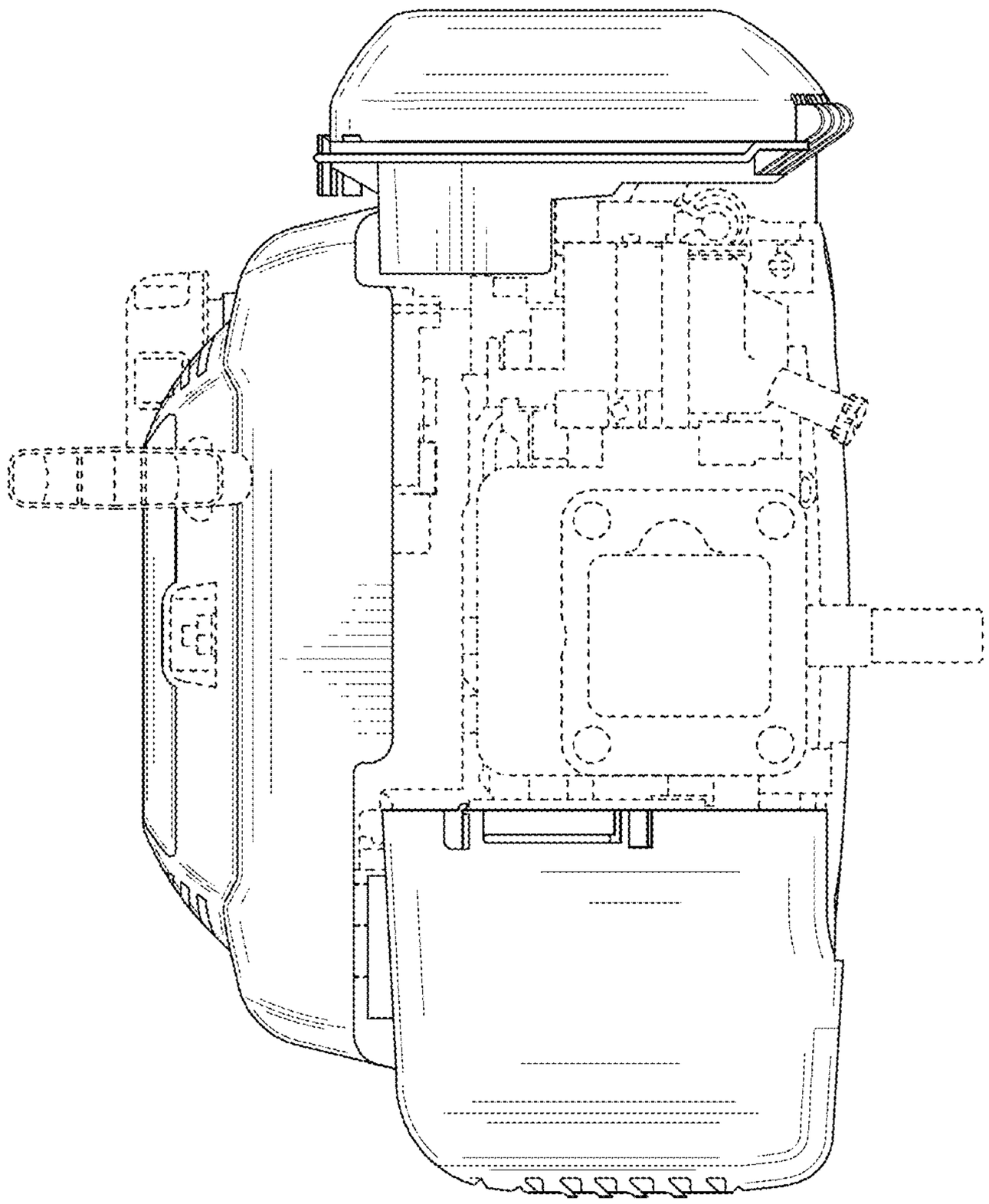

Fig.4

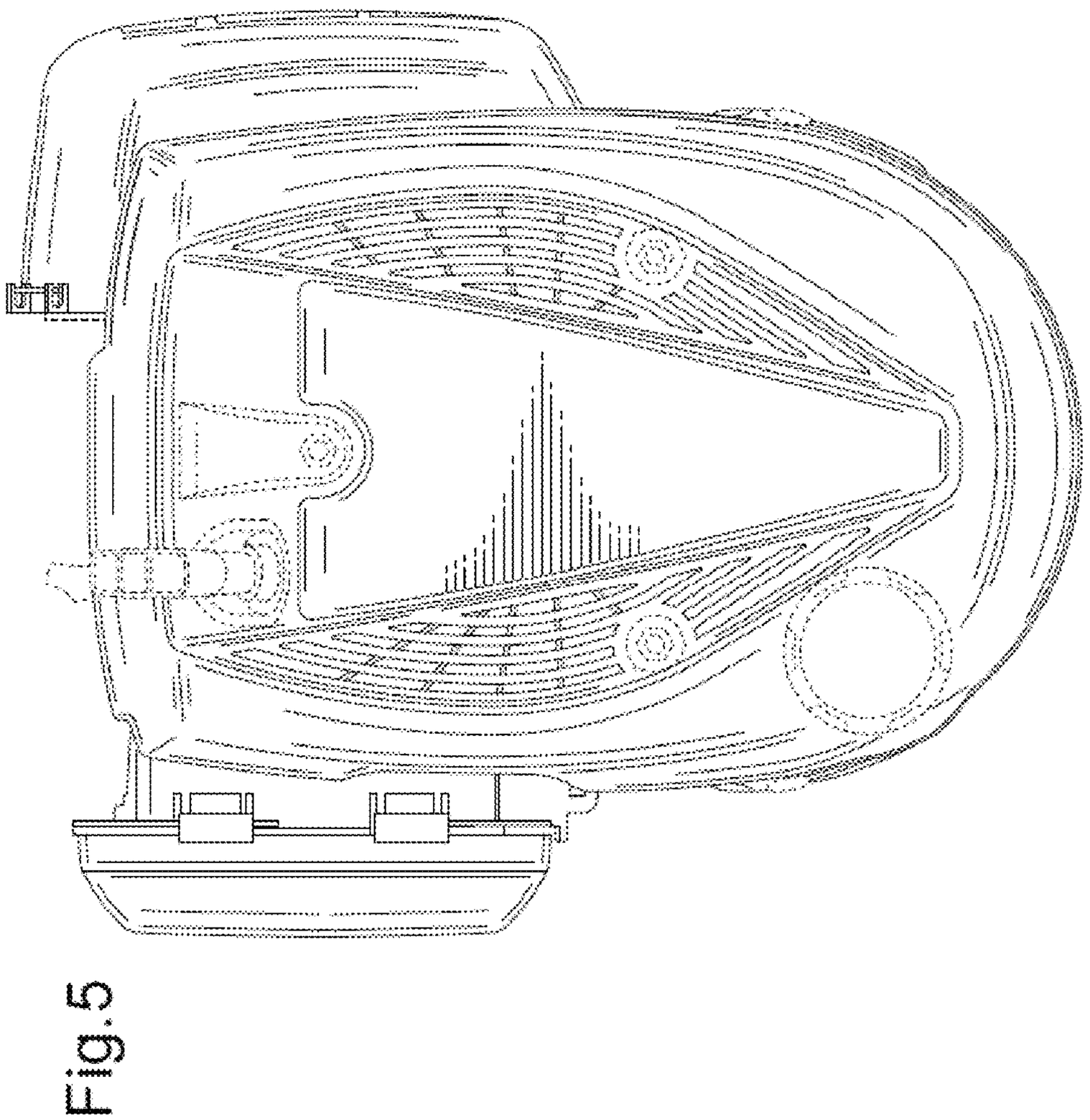

Fig. 5

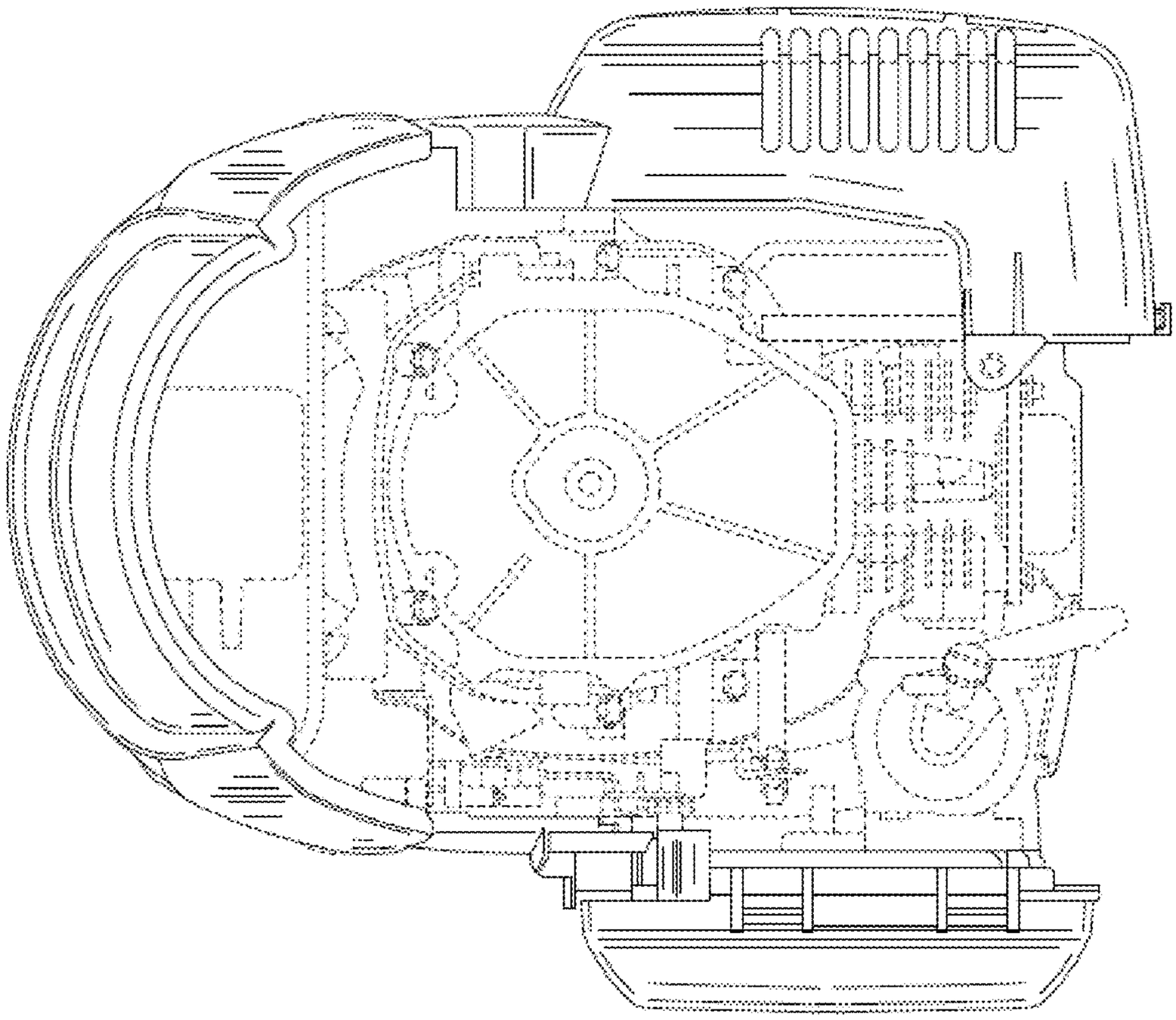

Fig.6

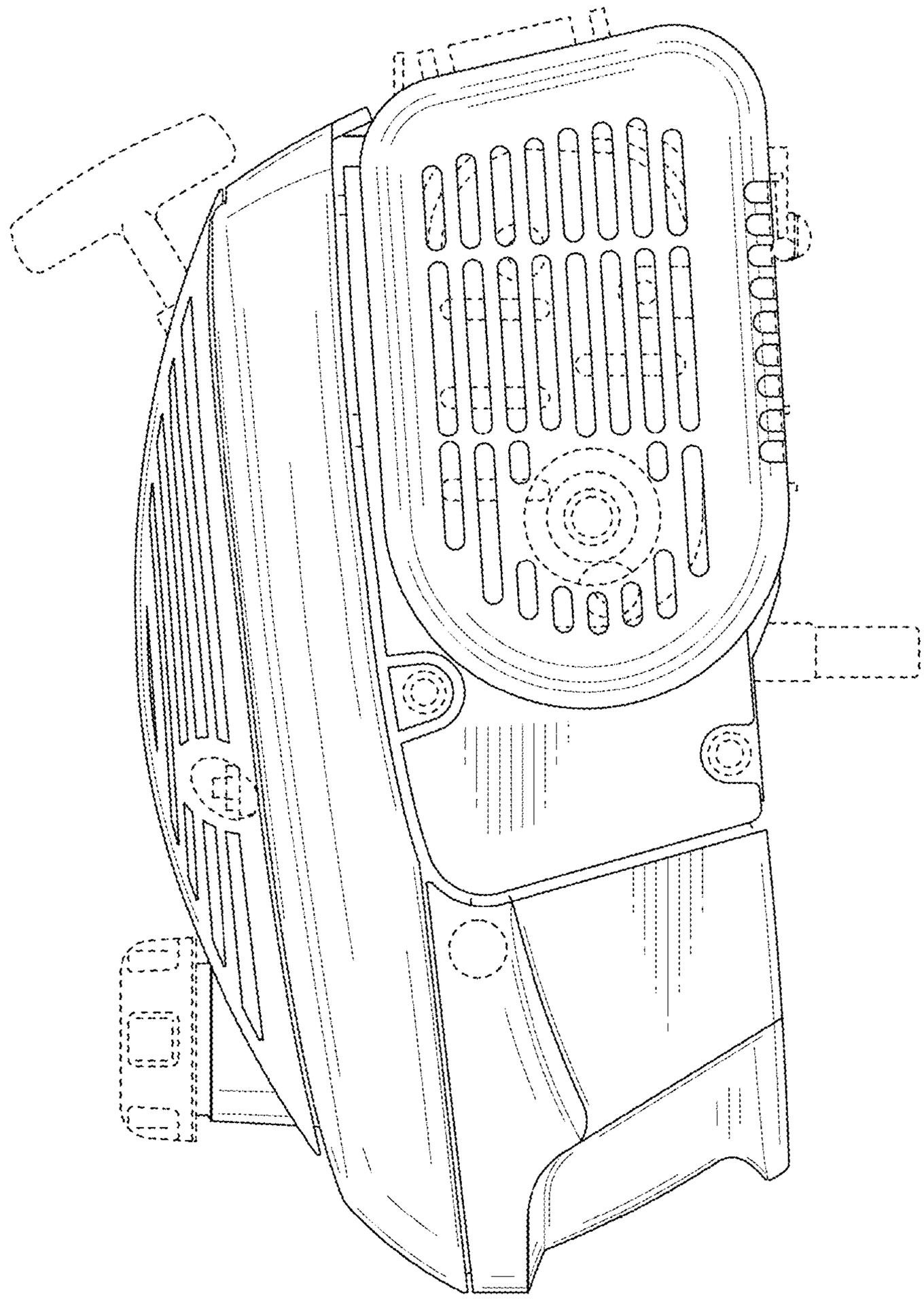

Fig.7

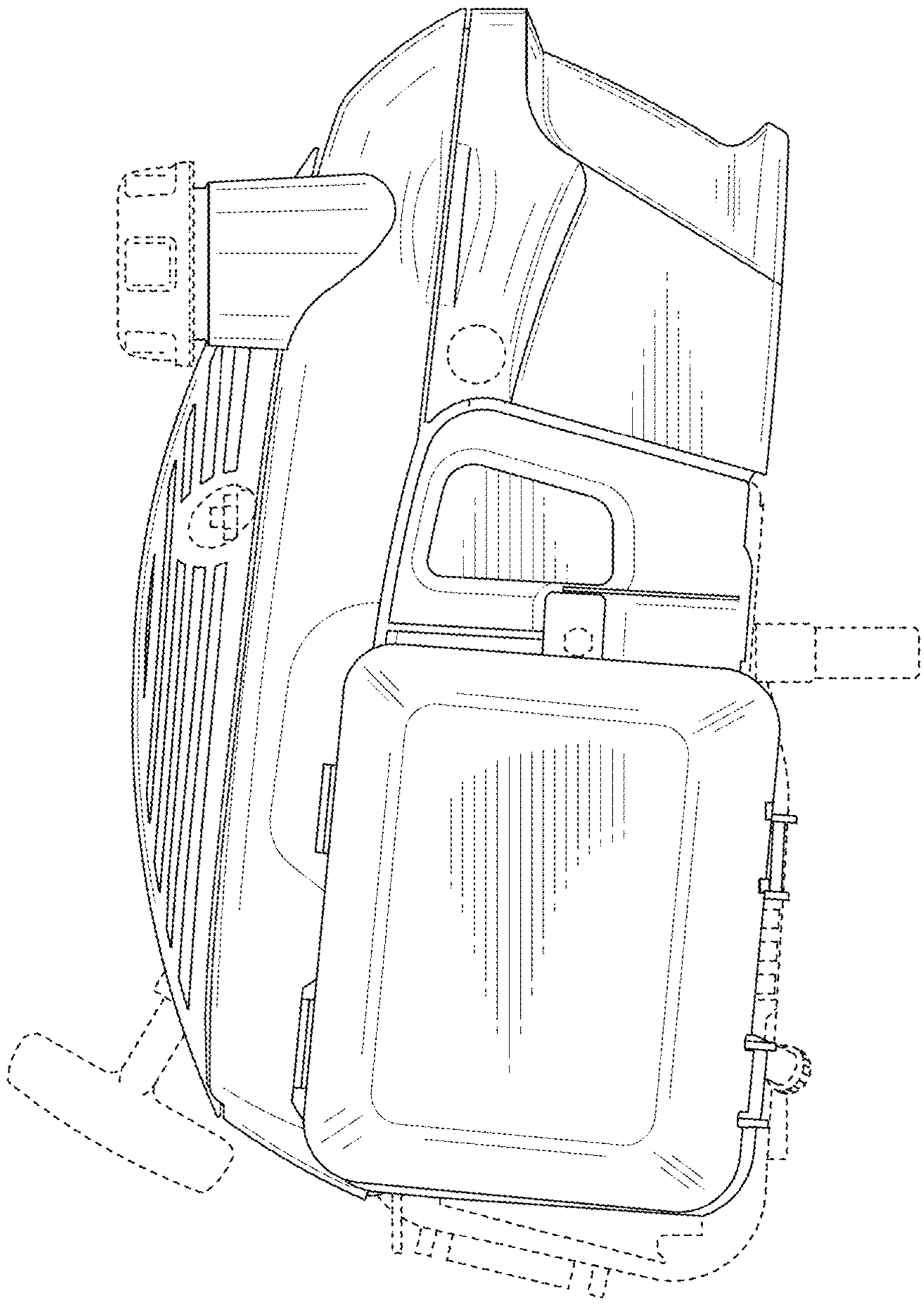

Fig.8