US00D779764S

(12) United States Design Patent
Thorsen

(10) Patent No.: US D779,764 S
(45) Date of Patent: ** Feb. 21, 2017

(54) **CARRIER ATTACHMENT FOR A VEHICLE**

(71) Applicant: **Burro Creative Solutions**, Alexandria, VA (US)

(72) Inventor: **Robert Ladd Thorsen**, Warrenton, VA (US)

(73) Assignee: **Burro Creative Solutions**, Alexandria, VA (US)

(**) Term: **15 Years**

(21) Appl. No.: **29/538,173**

(22) Filed: **Sep. 1, 2015**

(51) **LOC (10) Cl.** **12-02**

(52) **U.S. Cl.**
USPC **D34/27**

(58) **Field of Classification Search**
USPC . D34/16, 27; 224/42.11, 538, 401; 280/653, 280/47.31, 659, 655.1, 47.33, 47.26, 280/47.34, 33.992, 33.995, 33.997
CPC B62B 3/1468; B62B 3/148; B62B 3/1484; B62B 3/1408; B62B 5/06; B62B 5/069; B62B 2501/06; B62B 1/208; B62B 1/206; B62B 1/18; B62B 1/20; B62B 1/186
See application file for complete search history.

(56) **References Cited**

U.S. PATENT DOCUMENTS

4,281,843 A * 8/1981 Johnson B62B 1/10 280/47.19
4,350,366 A * 9/1982 Helms A01G 1/00 280/47.26
4,521,030 A * 6/1985 Vance B62B 1/12 280/42
4,708,274 A * 11/1987 Roche A61H 3/00 108/44
5,380,033 A * 1/1995 Harling B62B 1/12 280/47.19
5,415,521 A * 5/1995 Hufnagel F02M 37/048 415/55.1
5,687,979 A * 11/1997 Plevka B62B 1/20 280/47.19
D393,129 S * 3/1998 Yemini D34/16
5,765,868 A * 6/1998 Ventrone B62B 5/00 220/482
5,957,352 A * 9/1999 Gares B25H 3/04 224/401
6,193,265 B1 * 2/2001 Yemini B60B 37/10 280/47.31
D487,325 S * 3/2004 Nelsen D34/16
6,964,421 B2 * 11/2005 Friel B62B 1/20 280/47.31
D600,423 S * 9/2009 Presnell D34/17
D732,785 S * 6/2015 Thorsen D34/27
2005/0212238 A1 * 9/2005 Conley B25H 1/04 280/47.32

(Continued)

Primary Examiner — Cynthia Ramirez
(74) *Attorney, Agent, or Firm* — Maier & Maier, PLLC

(57) **CLAIM**

The ornamental design for a carrier attachment for a vehicle, as shown and described.

DESCRIPTION

FIG. **1** is a top front perspective view of a carrier attachment for a vehicle showing my new design;
FIG. **2** a top plan view thereof;
FIG. **3** is a bottom plan view thereof;
FIG. **4** is a right side elevation view thereof, the left side elevation view being a mirror image of the right side elevation view;
FIG. **5** is a rear elevation view thereof; and,
FIG. **6** is a front elevation view thereof.
The dashed broken lines in FIG. **3** are to show portions of the carrier attachment for a vehicle and form no part of the claimed design.

1 Claim, 6 Drawing Sheets

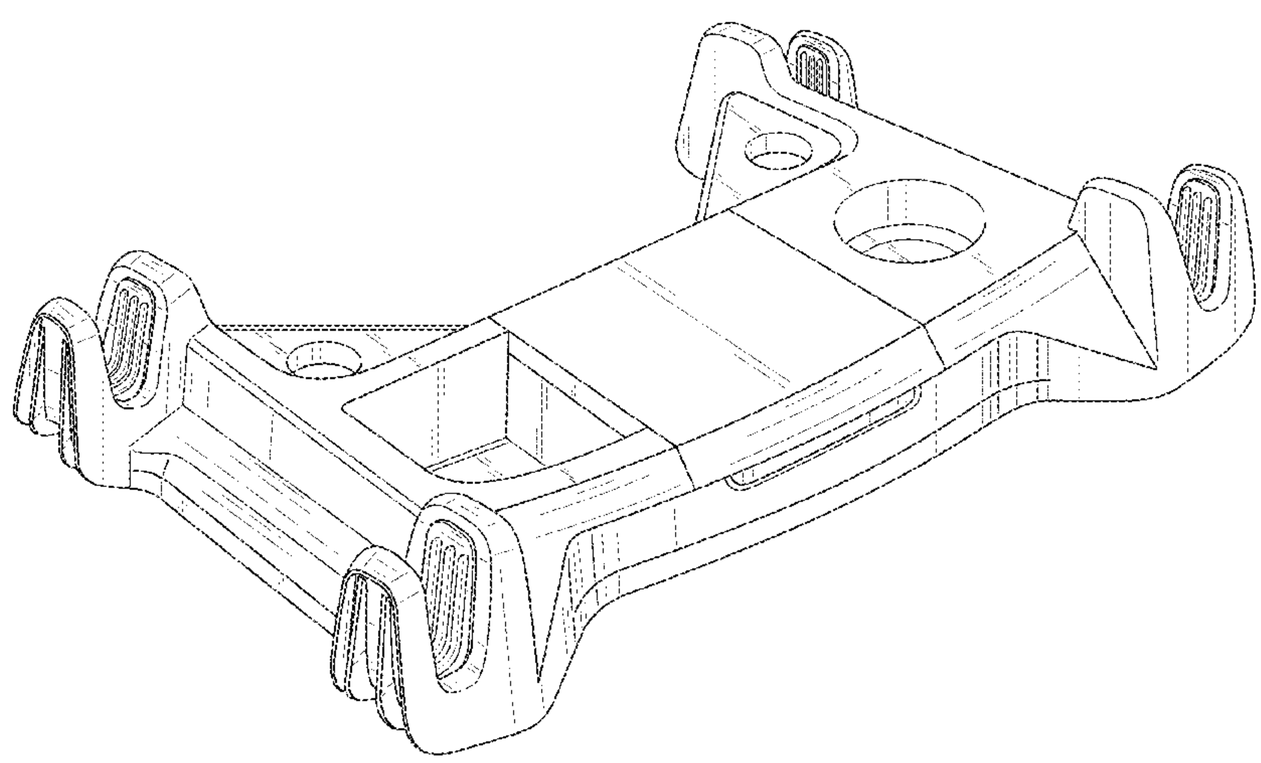

(56) **References Cited**

U.S. PATENT DOCUMENTS

2007/0039986	A1*	2/2007	Tomasi	B25H 3/04 224/401
2010/0116960	A1*	5/2010	Lusk	B62B 1/266 248/314
2011/0260420	A1*	10/2011	Volin	B62B 1/204 280/47.31
2015/0001267	A1*	1/2015	Thorsen	B62B 1/204 224/401

* cited by examiner

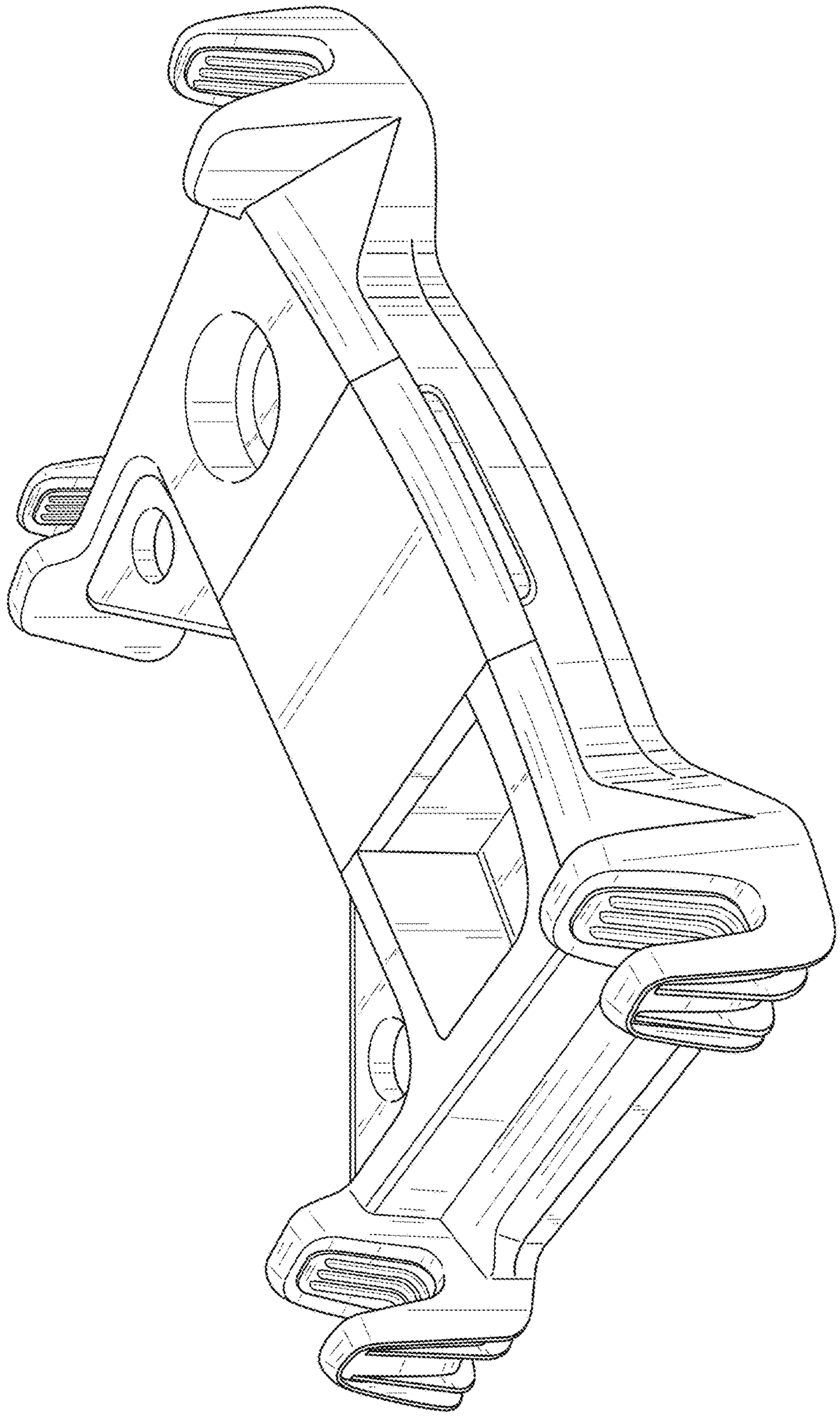

FIG. 1

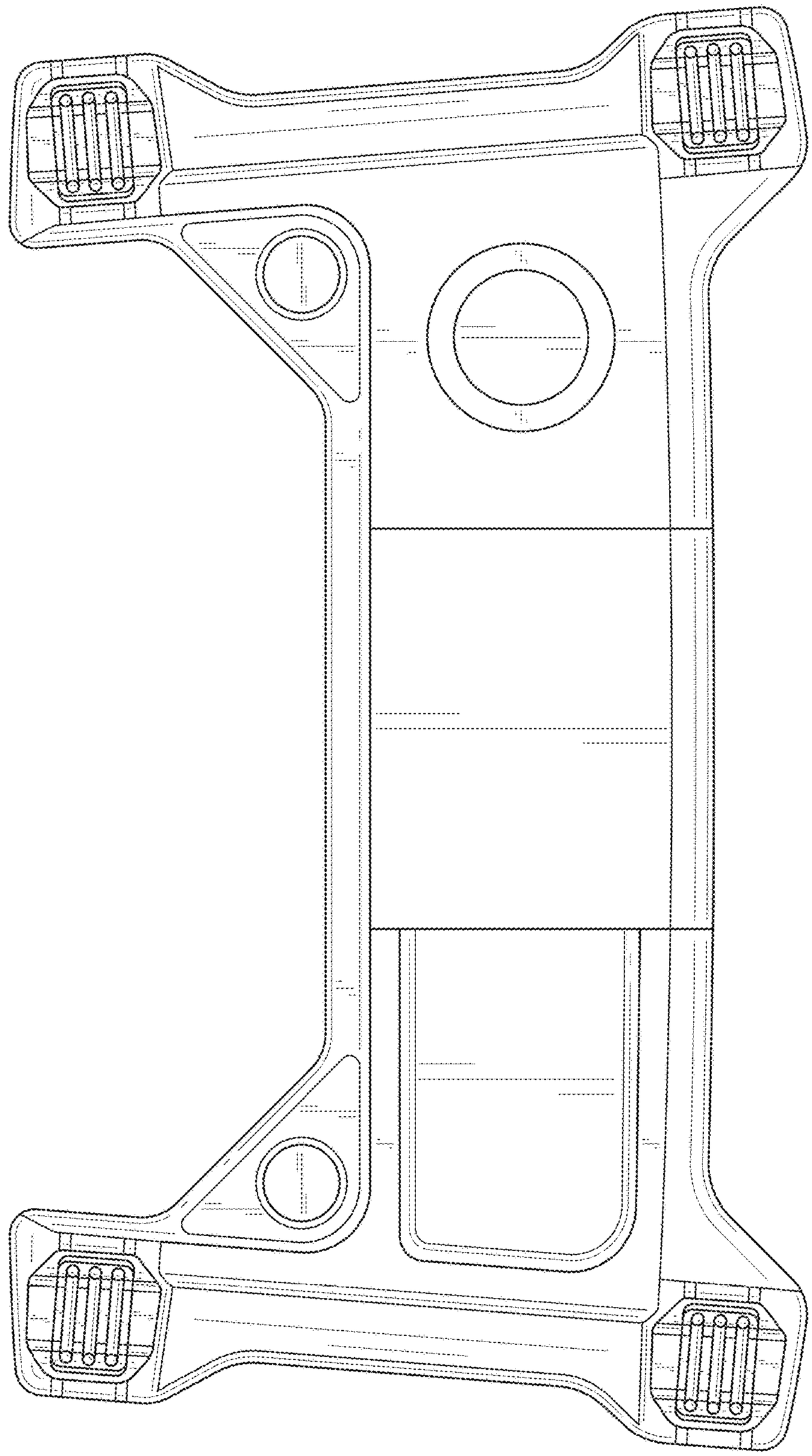

FIG. 2

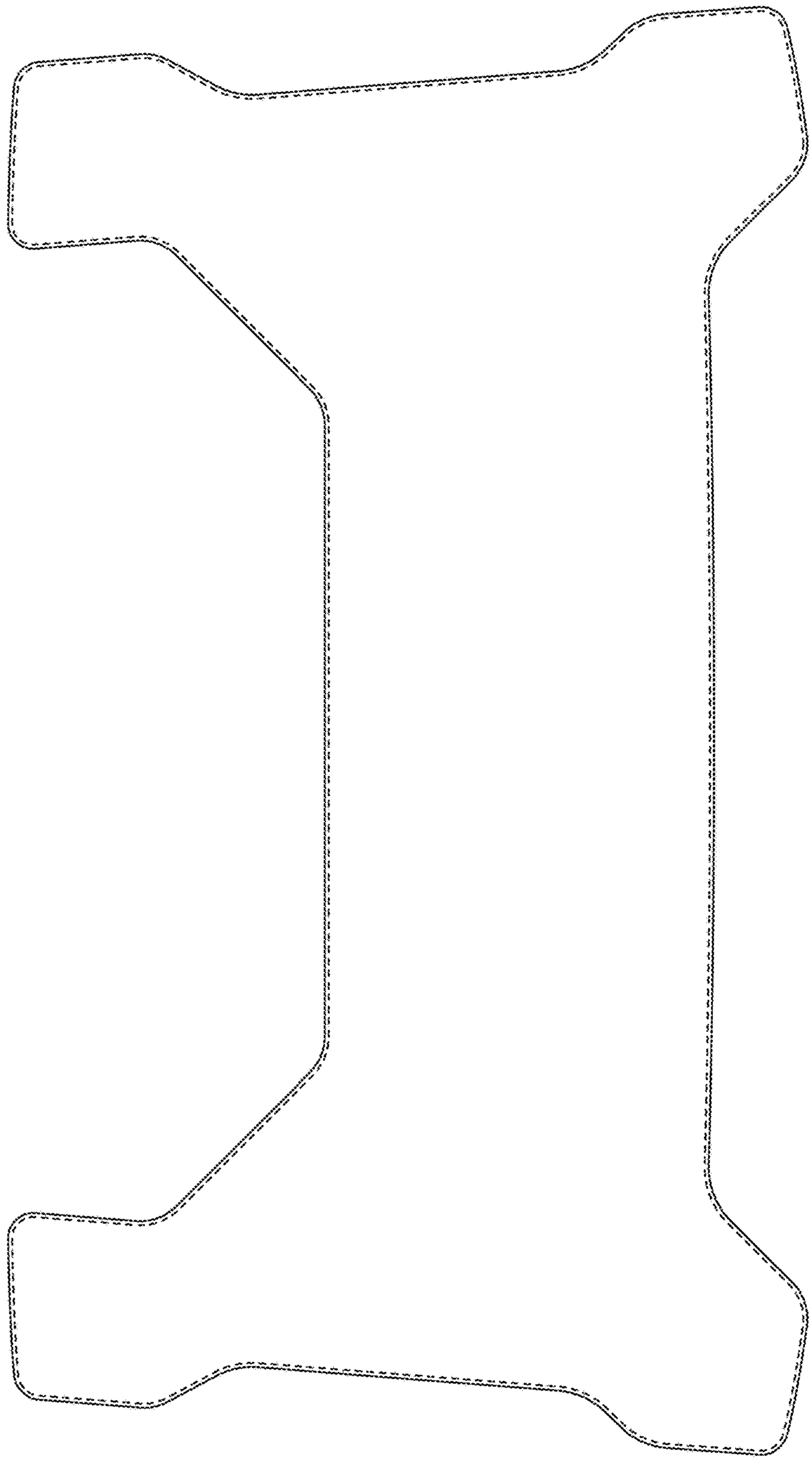

FIG. 3

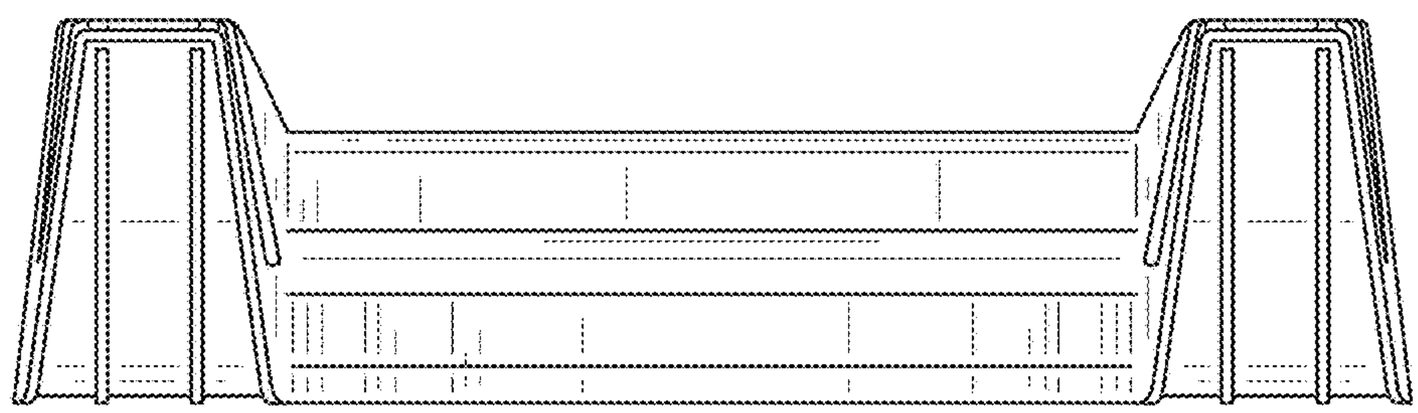

FIG. 4

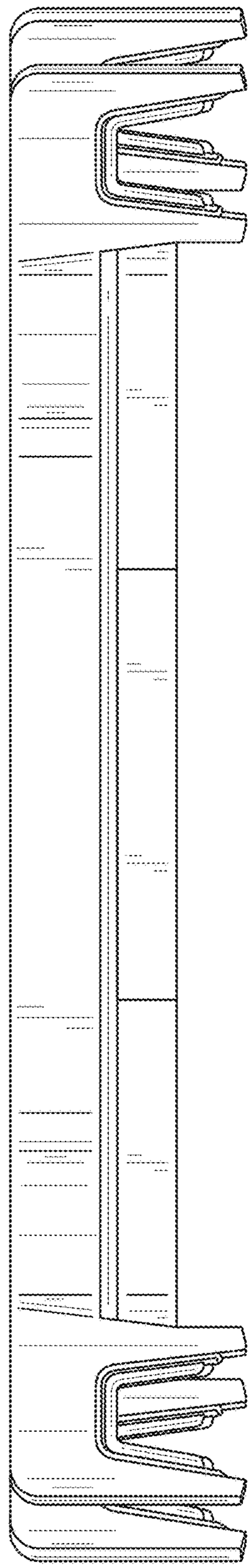

FIG. 5

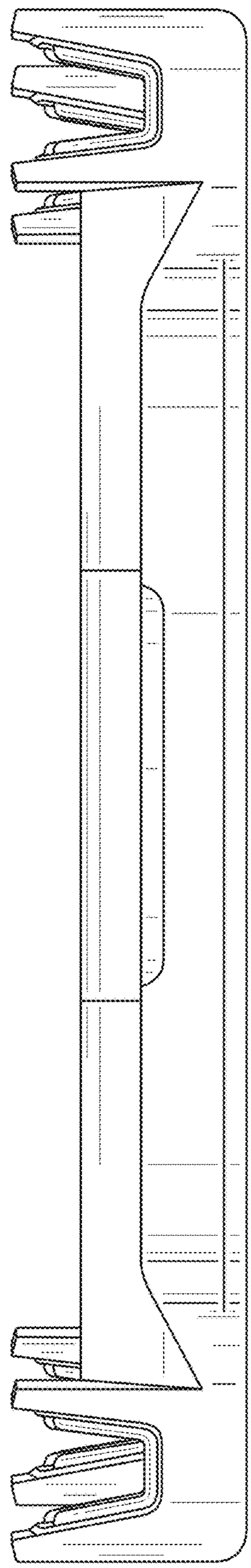

FIG. 6