US00D778686S

(12) United States Design Patent

Piazza et al.

(10) Patent No.: US D778,686 S
(45) Date of Patent: ** Feb. 14, 2017

(54) **TUB COOLER WITH LID**

(71) Applicant: **The Gem Group, Inc.**, Lawrence, MA (US)

(72) Inventors: **Kimberly M. Piazza**, Windham, NH (US); **Sara E. Stump**, Somerville, MA (US); **Agnes Csilla Domotor**, Melrose, MA (US)

(73) Assignee: **The Gem Group, Inc.**, Lawrence, MA (US)

(**) Term: **14 Years**

(21) Appl. No.: **29/515,415**

(22) Filed: **Jan. 22, 2015**

(51) **LOC (10) Cl.** **07-01**

(52) **U.S. Cl.**
USPC **D7/605**

(58) **Field of Classification Search**
USPC .. D7/602, 605, 606, 607, 628, 629; D3/217, D3/273, 289, 301
CPC A47F 3/04; B62B 3/00; B65D 6/00; B65D 81/38; B65D 17/165; B65D 81/3886; B65D 8/14; F25D 3/00; F25D 3/06; F25D 3/08; F25D 2331/803; F25D 2331/804; F25D 2331/805; F25D 2331/806; F25D 2331/807; F25D 2331/808; F25D 2331/809
See application file for complete search history.

(56) **References Cited**

U.S. PATENT DOCUMENTS

D407,609	S	*	4/1999	Rausch	D7/605
D514,893	S	*	2/2006	Bellofatto, Jr.	D3/301
7,147,125	B1	*	12/2006	Slovak	B65D 81/3818 220/4.31
D588,451	S	*	3/2009	Snedden	D7/602
D634,982	S	*	3/2011	Melchert	D7/605

* cited by examiner

Primary Examiner — Freda S Nunn
(74) *Attorney, Agent, or Firm* — Loginov & Associates, PLLC; William A. Loginov

(57) **CLAIM**

The ornamental design for a tub cooler with lid, as shown.

DESCRIPTION

FIG. **1** is a perspective view of the tub cooler with lid;
FIG. **2** is a front view of the tub cooler with lid;
FIG. **3** is a rear view of the tub cooler with lid;
FIG. **4** is a top view of the tub cooler with lid;
FIG. **5** is a bottom view of the tub cooler with lid;
FIG. **6** is a right side view of the tub cooler with lid; and,
FIG. **7** is a left side view of the tub cooler with lid.
Broken lines shown in the drawings represent environment only and form no part of the claimed design.

1 Claim, 5 Drawing Sheets

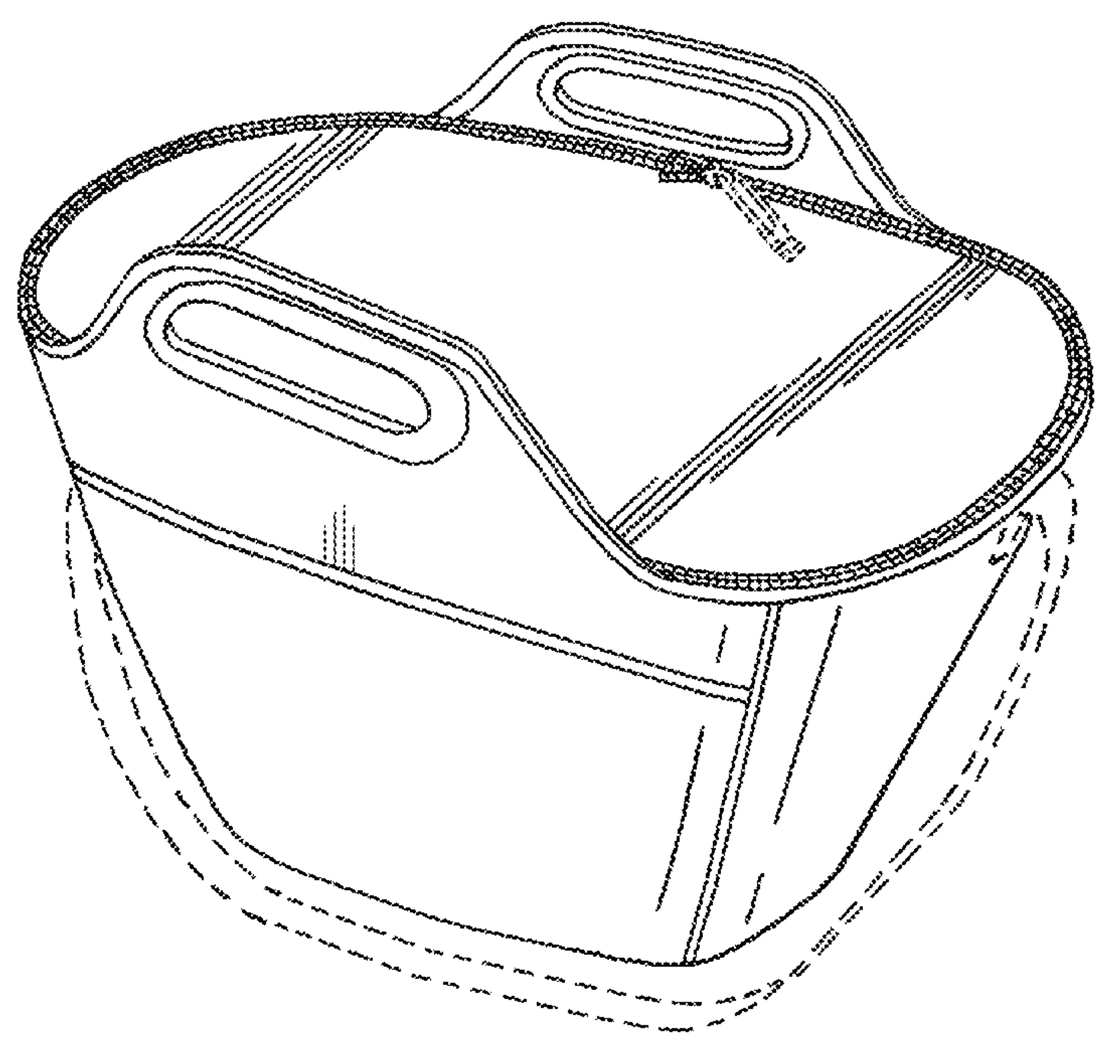

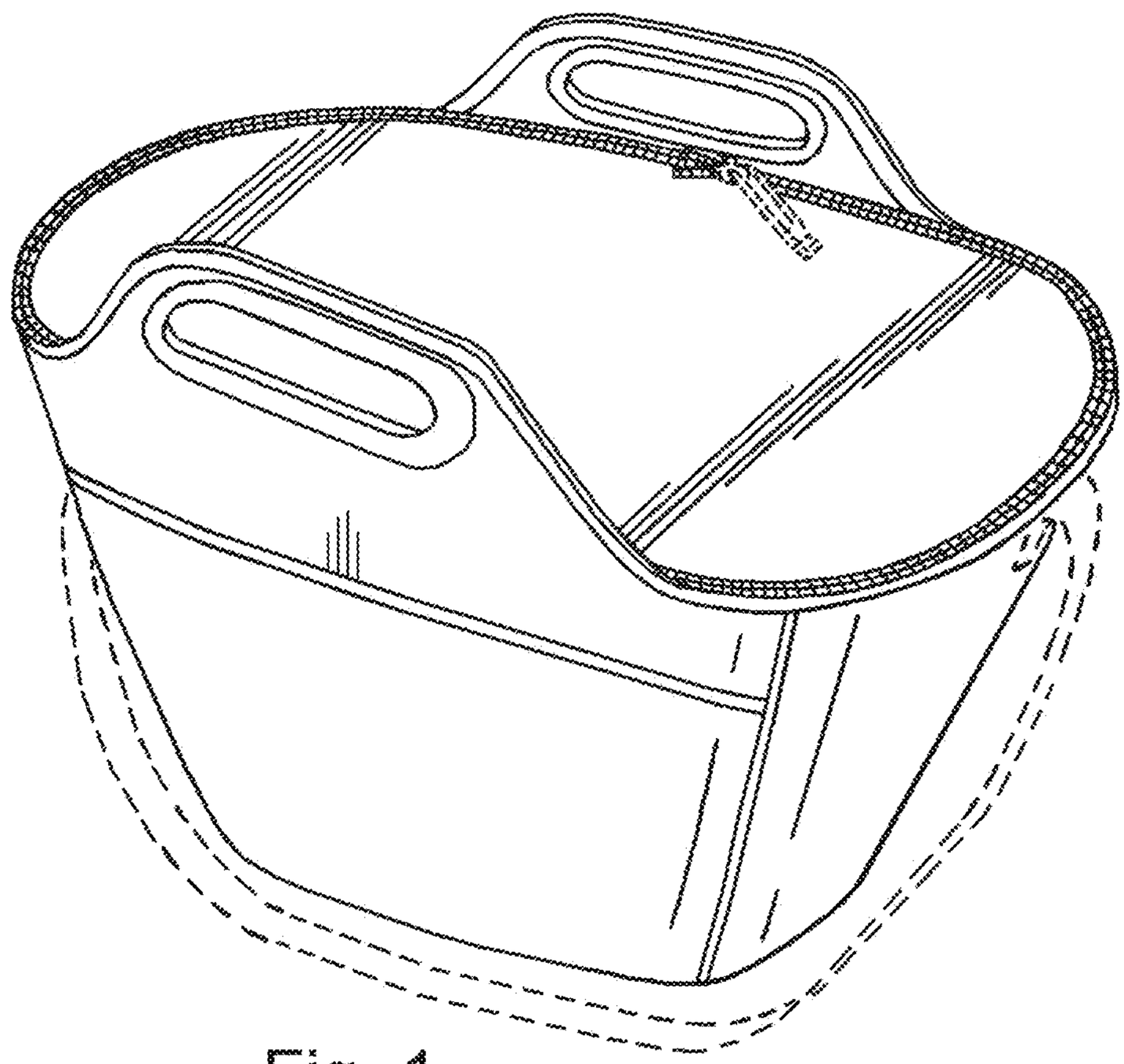

Fig. 1

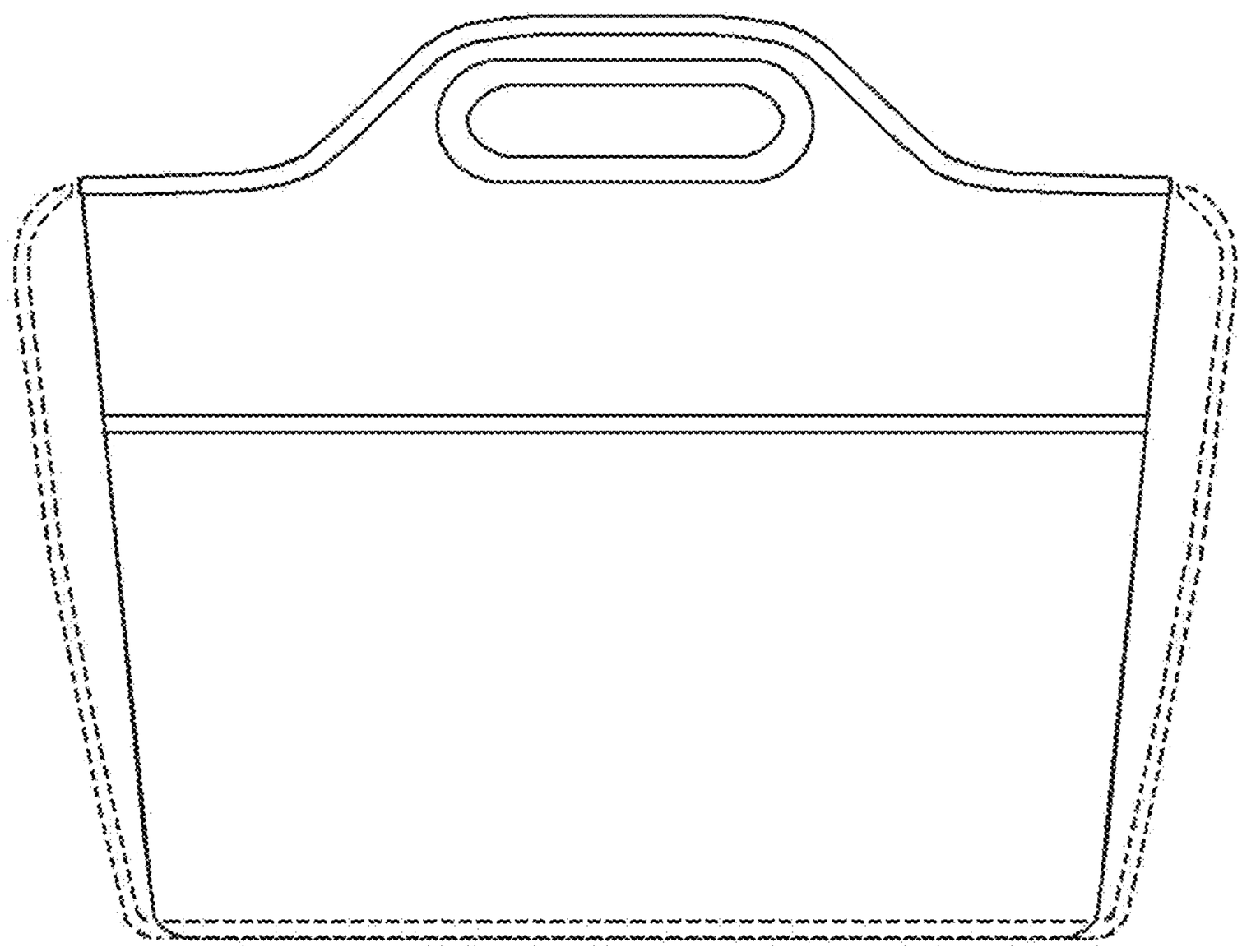

Fig. 2

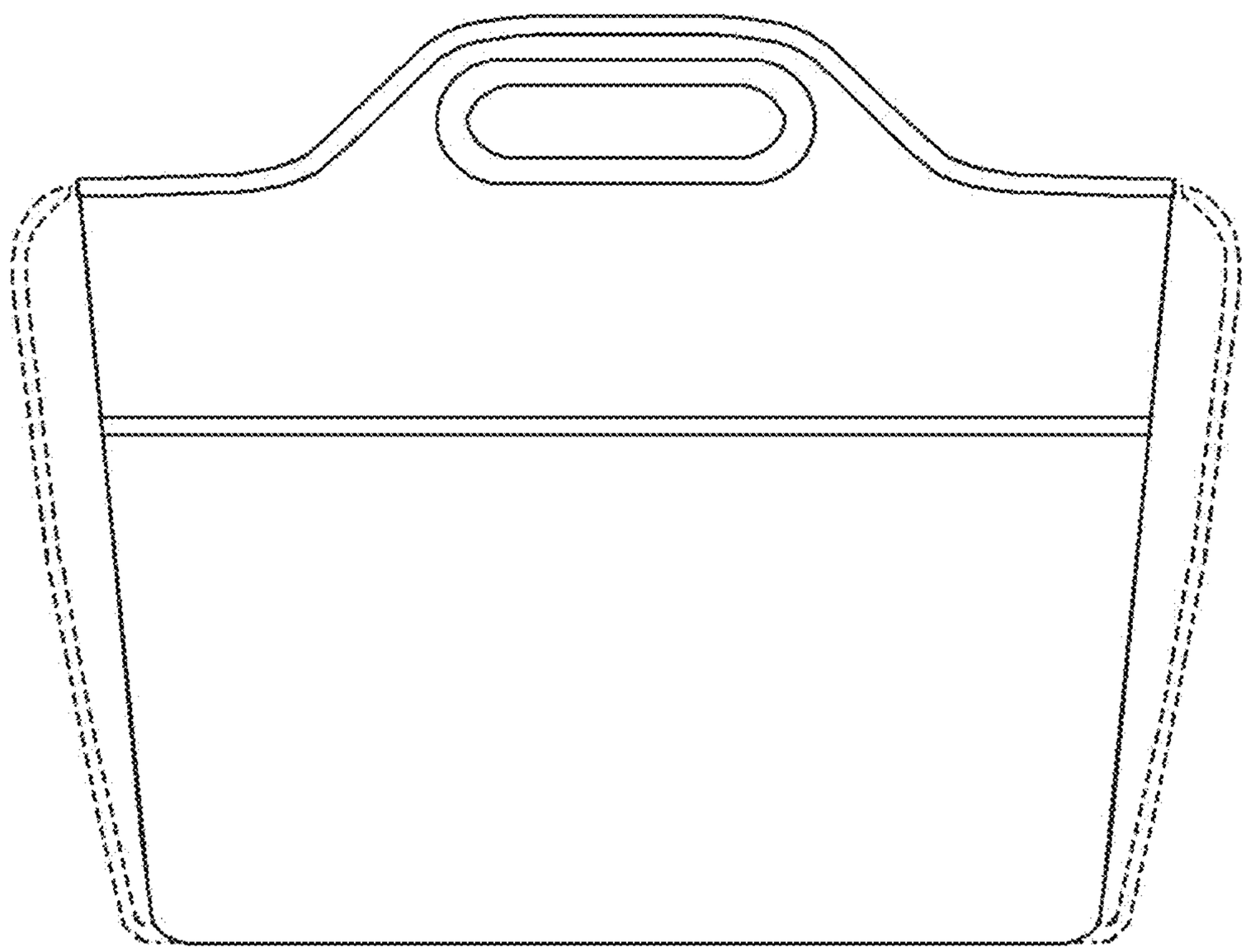

Fig. 3

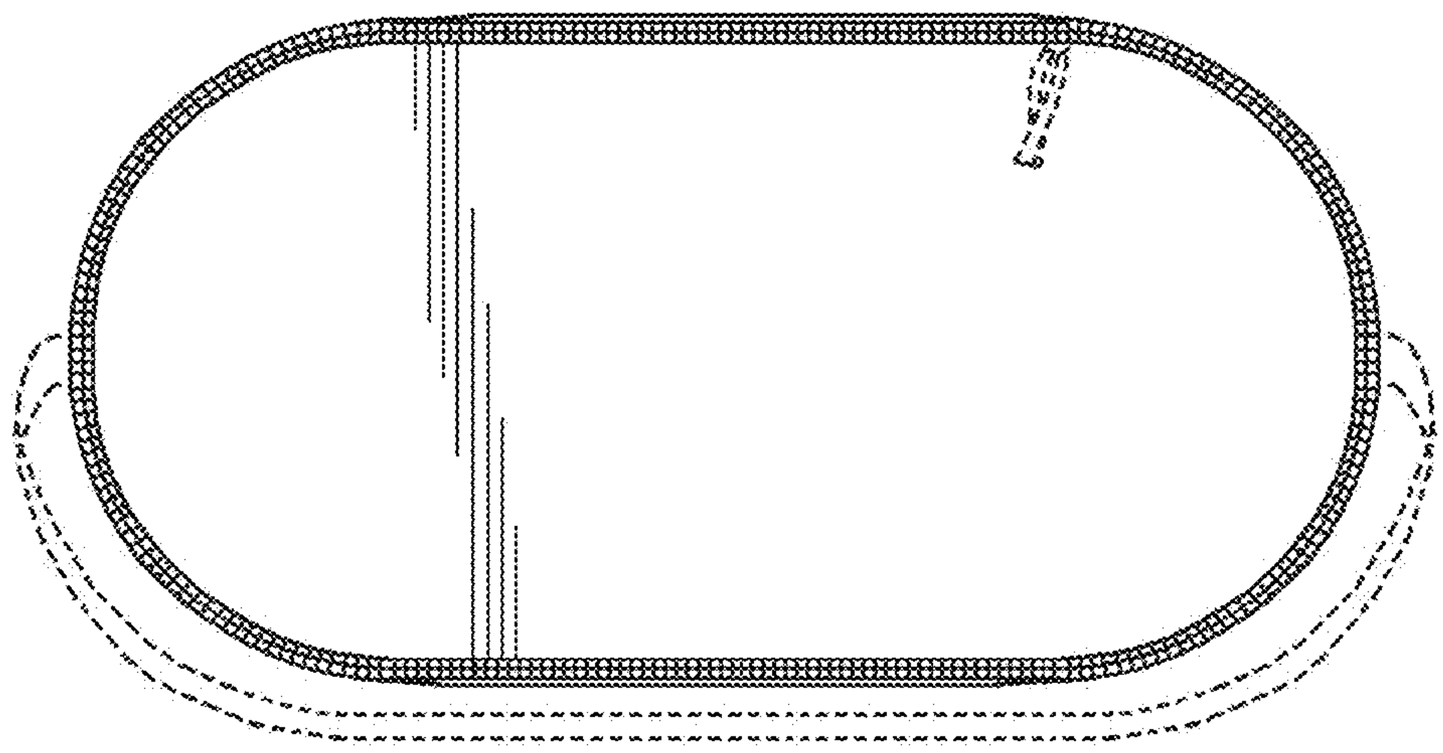

Fig.4

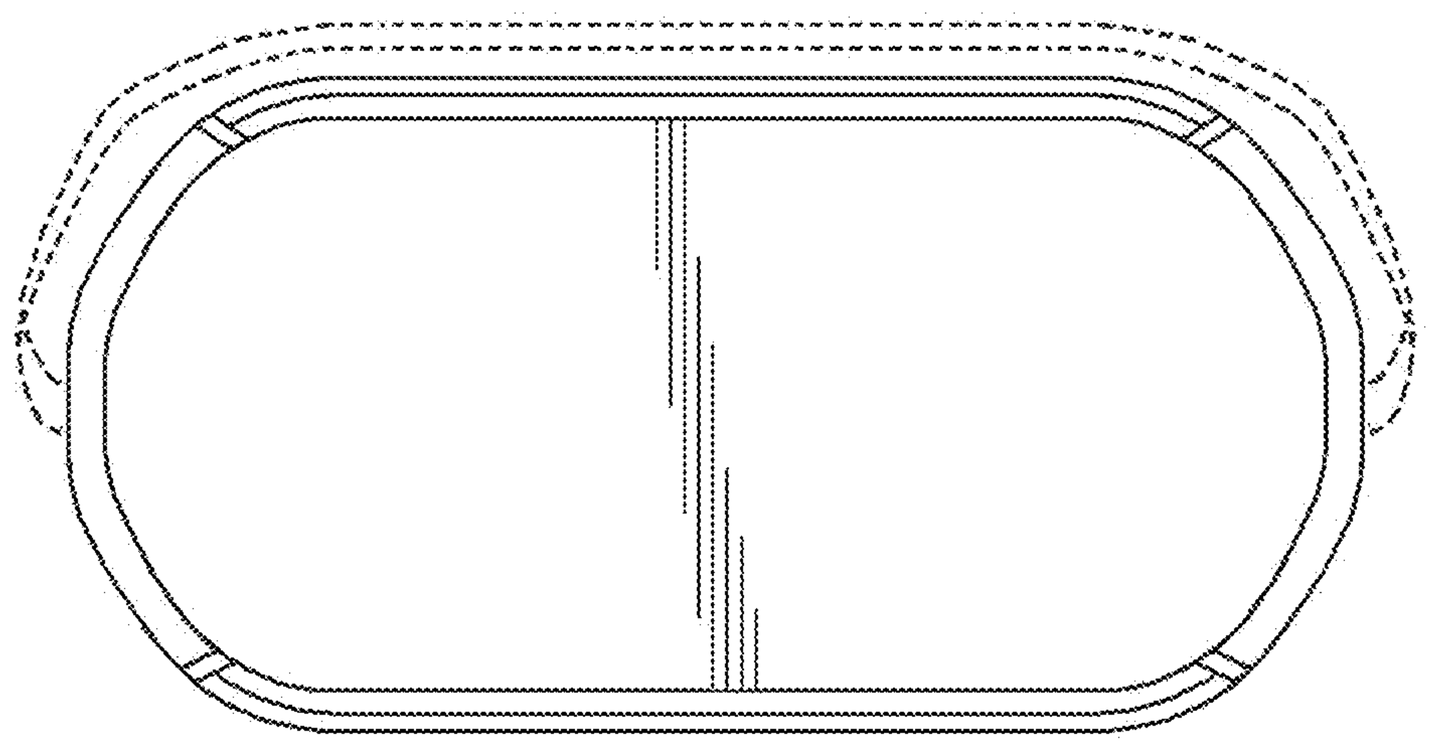

Fig. 5

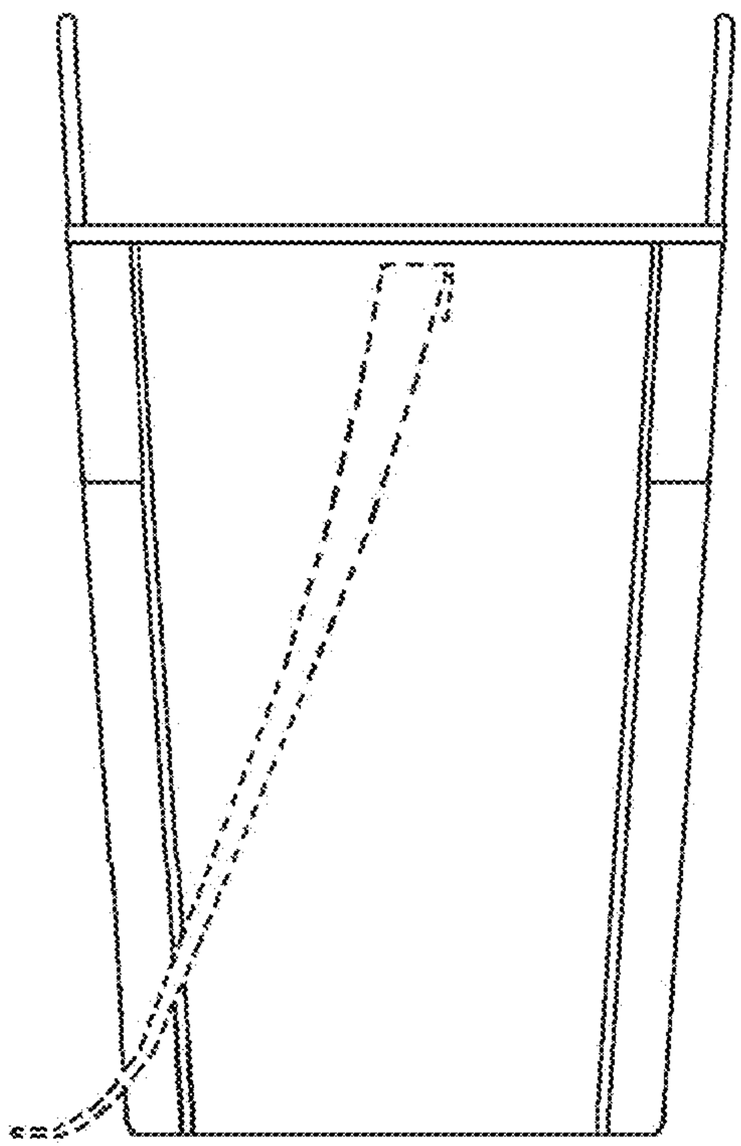

Fig. 6

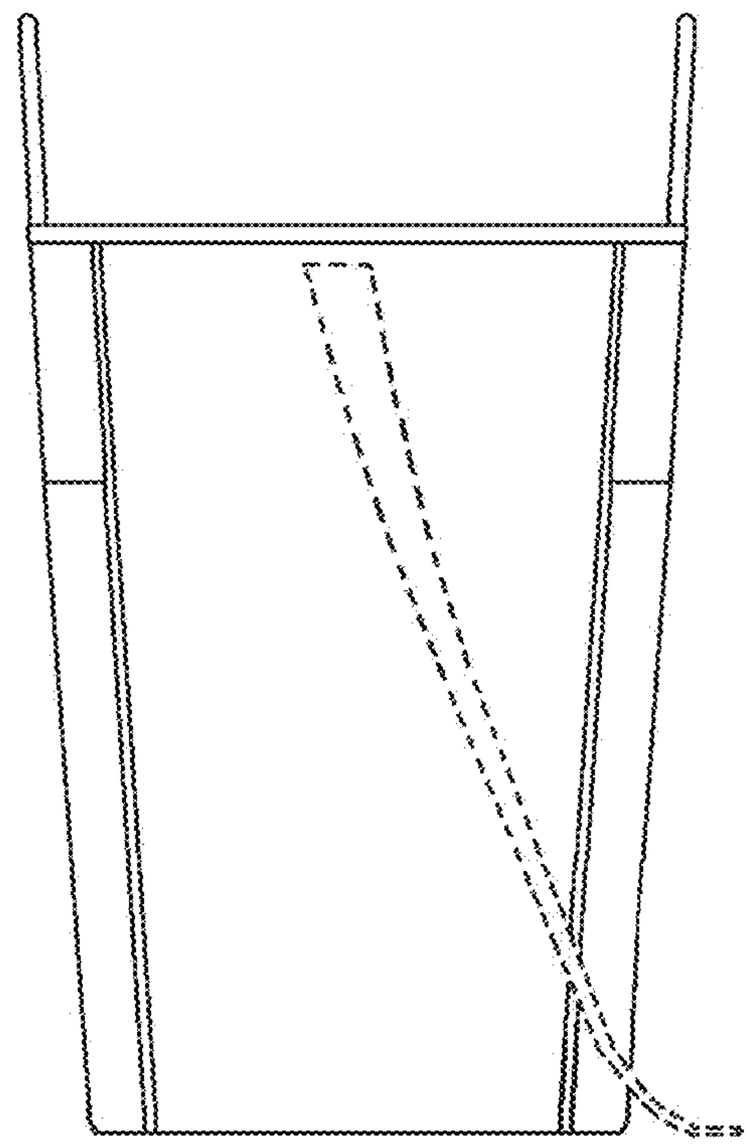

Fig. 7