US00D778517S

(12) United States Design Patent

Perin et al.

(10) Patent No.: US D778,517 S
(45) Date of Patent: ** Feb. 7, 2017

(54) **VACUUM CLEANER NOZZLE HOOD**

(71) Applicant: **Electrolux Home Care Products, Inc.**, Charlotte, NC (US)

(72) Inventors: **Jamie Perin**, Charlotte, NC (US); **Saba Rizzi**, Charlotte, NC (US)

(73) Assignee: **Electrolux Home Care Products, Inc.**, Charlotte, NC (US)

(**) Term: **14 Years**

(21) Appl. No.: **29/497,854**

(22) Filed: **Jul. 29, 2014**

(51) **LOC (10) Cl.** **15-05**

(52) **U.S. Cl.**
USPC **D32/32**

(58) **Field of Classification Search**
USPC D32/25, 31–33
CPC A47L 9/02; A47L 9/06; A47L 5/28; A47L 5/24; A47L 11/4044; E04H 4/1654; E04H 4/34
See application file for complete search history.

(56) **References Cited**

U.S. PATENT DOCUMENTS

2,904,816	A	2/1956	Skolfield	
2,904,817	A	9/1959	Brennan	
3,005,224	A	10/1961	Magarian	
4,392,271	A	7/1983	Sepke	
5,054,157	A	10/1991	Werner et al.	
5,207,498	A	5/1993	Lawrence et al.	
5,467,501	A	11/1995	Sepke	
D381,780	S *	7/1997	Summers	D32/33
5,893,195	A	4/1999	Jung	
6,490,755	B2	12/2002	Paterson et al.	
D473,687	S *	4/2003	Kaffenberger	D32/33
D487,602	S	3/2004	Roberts et al.	
D495,106	S *	8/2004	Leyden	D32/32
6,823,559	B2	11/2004	Kaffenberger et al.	
D501,283	S	1/2005	Carr et al.	
D506,048	S *	6/2005	Downey	D32/32
D524,498	S *	7/2006	Luebbering	D32/32

(Continued)

Primary Examiner — Ruth McInroy
(74) *Attorney, Agent, or Firm* — RatnerPrestia

(57) **CLAIM**

The ornamental design for a vacuum cleaner nozzle hood, as shown and described.

DESCRIPTION

FIG. **1** is a top front isometric view of a vacuum cleaner nozzle hood showing our new design.
FIG. **2** is a top rear isometric view of the vacuum cleaner nozzle hood shown in FIG. **1**.
FIG. **3** is bottom front isometric view of the vacuum cleaner nozzle hood shown in FIG. **1**.
FIG. **4** is a top plan view of the vacuum cleaner nozzle hood shown in FIG. **1**.
FIG. **5** is a right side elevation view of the vacuum cleaner nozzle hood shown in FIG. **1**.
FIG. **6** is a left side elevation view of the vacuum cleaner nozzle hood shown in FIG. **1**.
FIG. **7** is a front elevation view of the vacuum cleaner nozzle hood shown in FIG. **1**.
FIG. **8** is a rear elevation view of the vacuum cleaner nozzle hood shown in FIG. **1**; and,
FIG. **9** is a bottom plan view of the vacuum cleaner nozzle hood shown in FIG. **1**.
In the drawings, the dash-dot broken lines immediately adjacent the shaded areas represent the boundary of the claimed design, and the dash-dot broken lines are not claimed.
The remaining broken lines indicate environmental structure that forms no part of the claimed design.

1 Claim, 8 Drawing Sheets

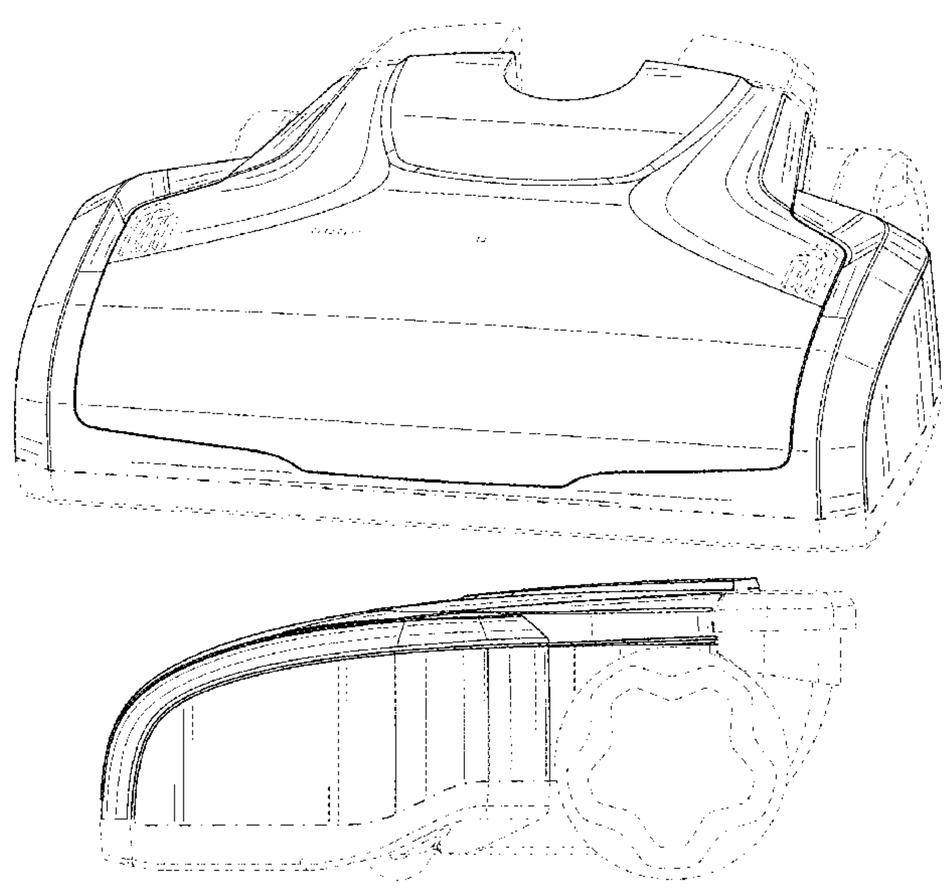

(56) **References Cited**

U.S. PATENT DOCUMENTS

D536,495	S	*	2/2007	Porter	D32/32
D537,587	S		2/2007	Scheifele et al.	
D546,510	S		7/2007	Parr et al.	
D549,906	S		8/2007	Rosenzweig	
D566,354	S		4/2008	Paredes et al.	
D566,355	S		4/2008	Paredes et al.	
D575,467	S		8/2008	Paredes et al.	
7,441,307	B2		10/2008	Smith	
D594,612	S	*	6/2009	Umeda	D32/32
7,634,836	B2		12/2009	Lee	
D619,315	S	*	7/2010	Ayers	D32/32
D621,564	S	*	8/2010	Kaffenberger	D32/32
D655,468	S	*	3/2012	Karsan	D32/33
8,214,966	B2		7/2012	Steffen et al.	
D667,184	S	*	9/2012	Chu	D32/33
8,387,207	B2		3/2013	Dimbylow et al.	
D720,104	S	*	12/2014	Santiago	D32/32
D730,003	S	*	5/2015	Cheon	D32/33
2006/0076035	A1		4/2006	McGee et al.	
2014/0237754	A1	*	8/2014	Conrad	A47L 5/225 15/328

* cited by examiner

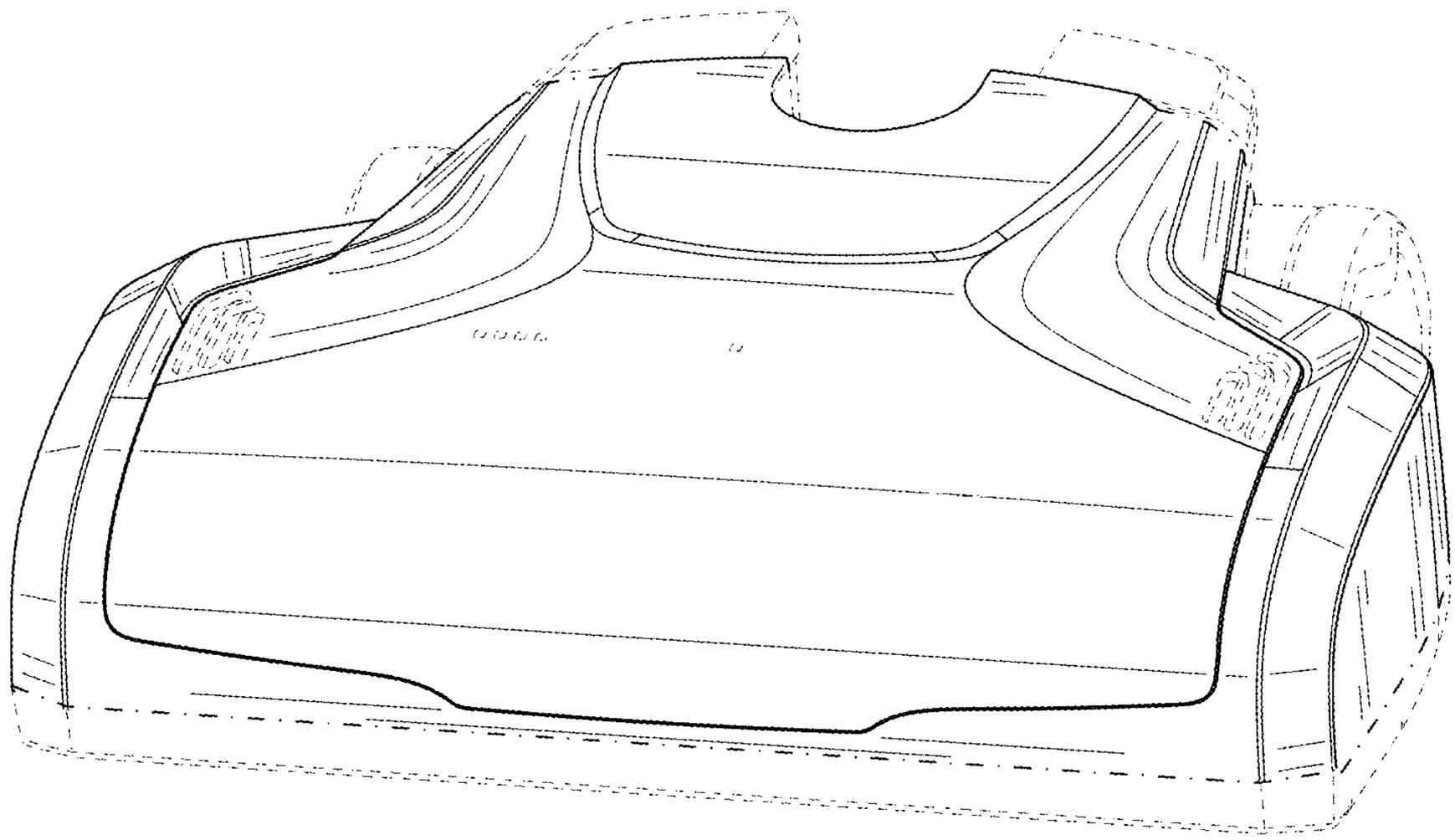

FIG. 1

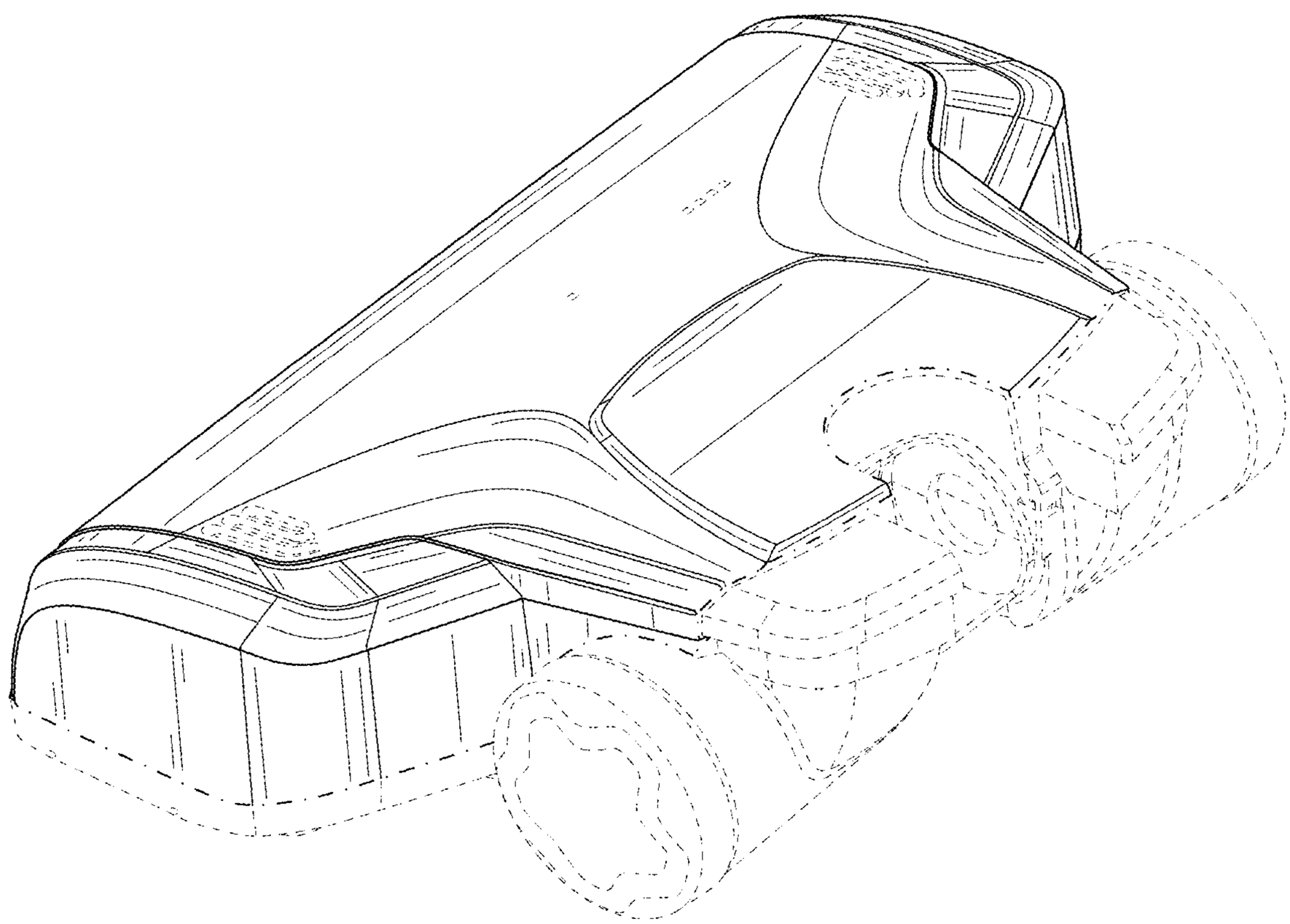

FIG. 2

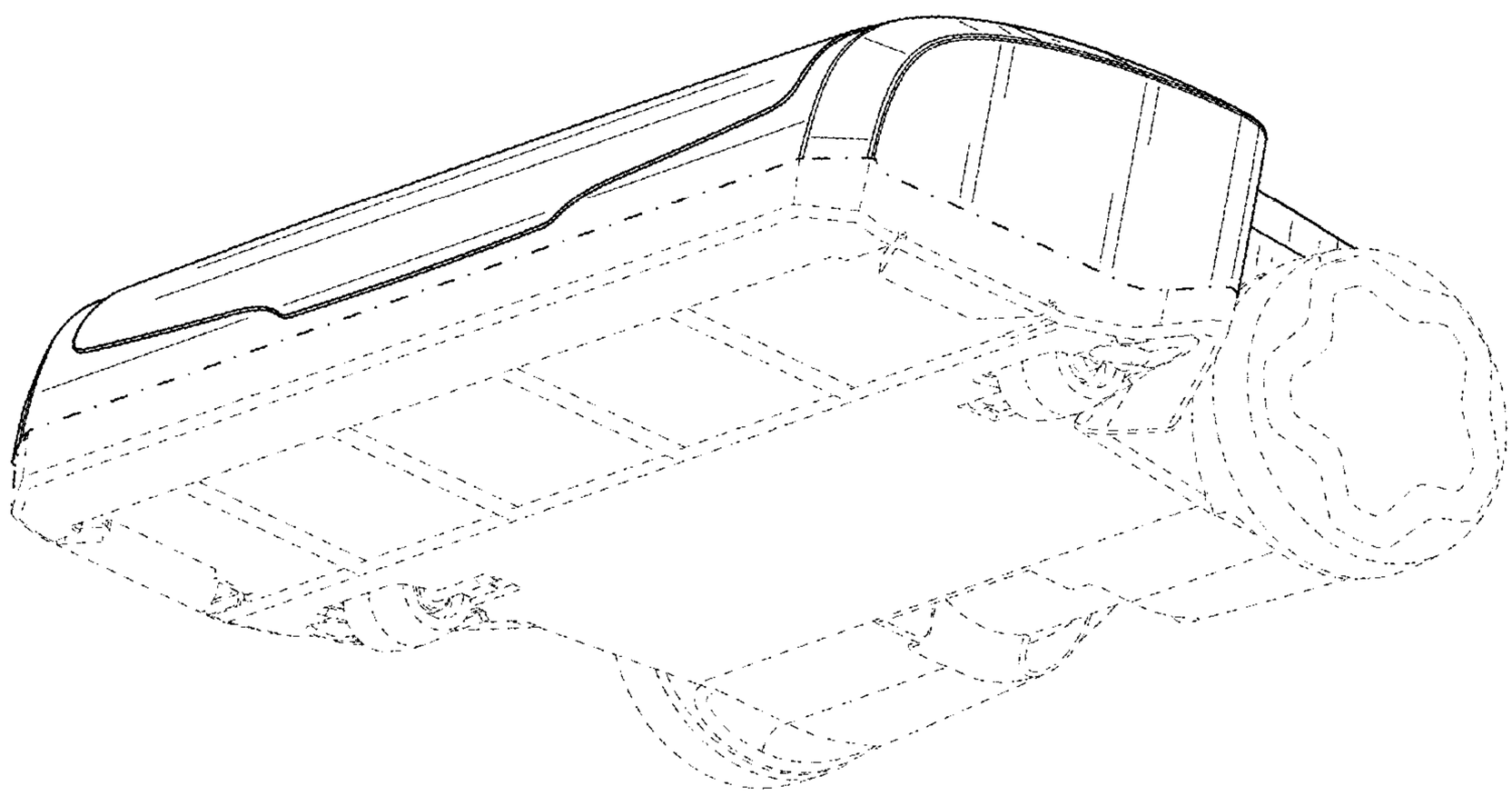

FIG. 3

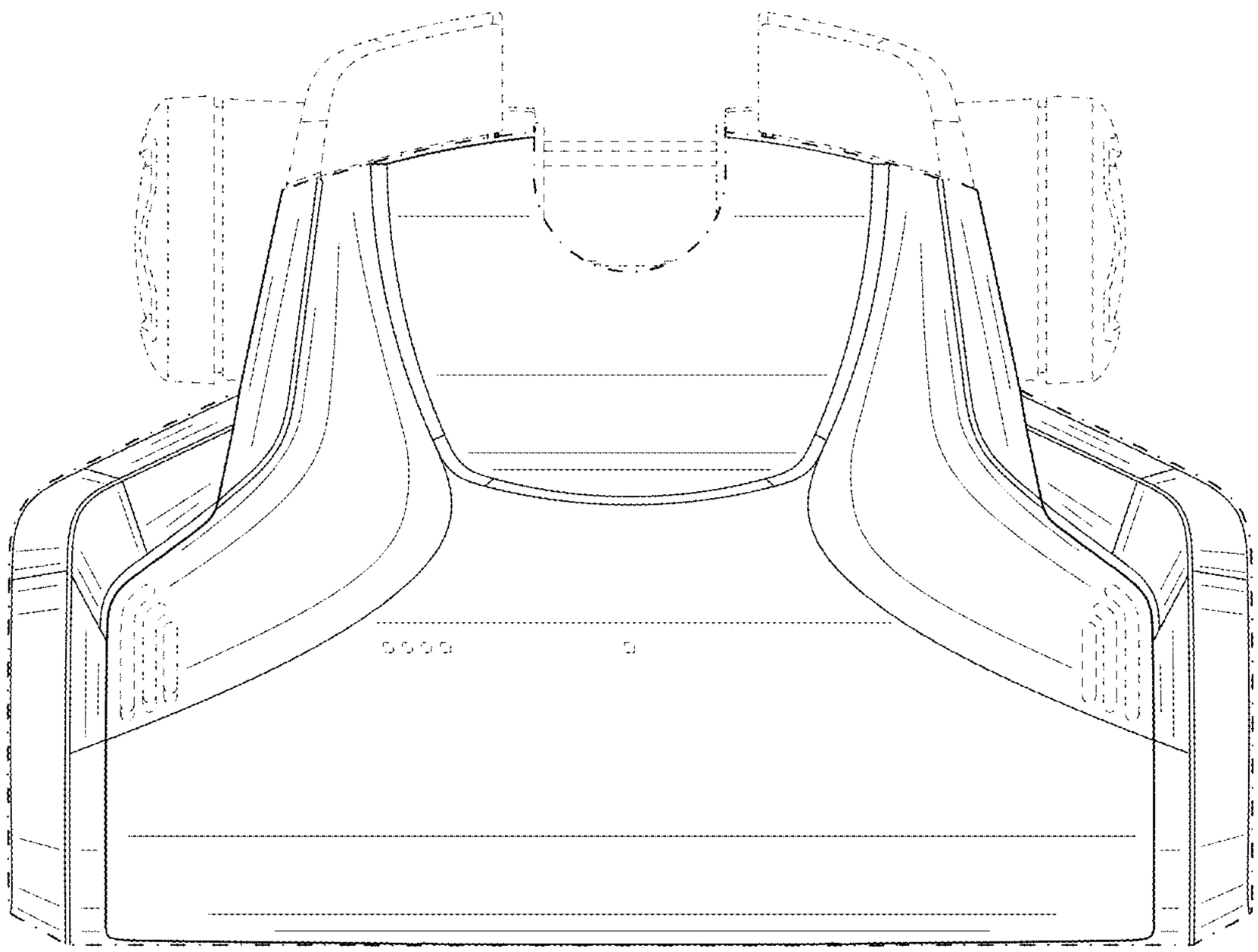

FIG. 4

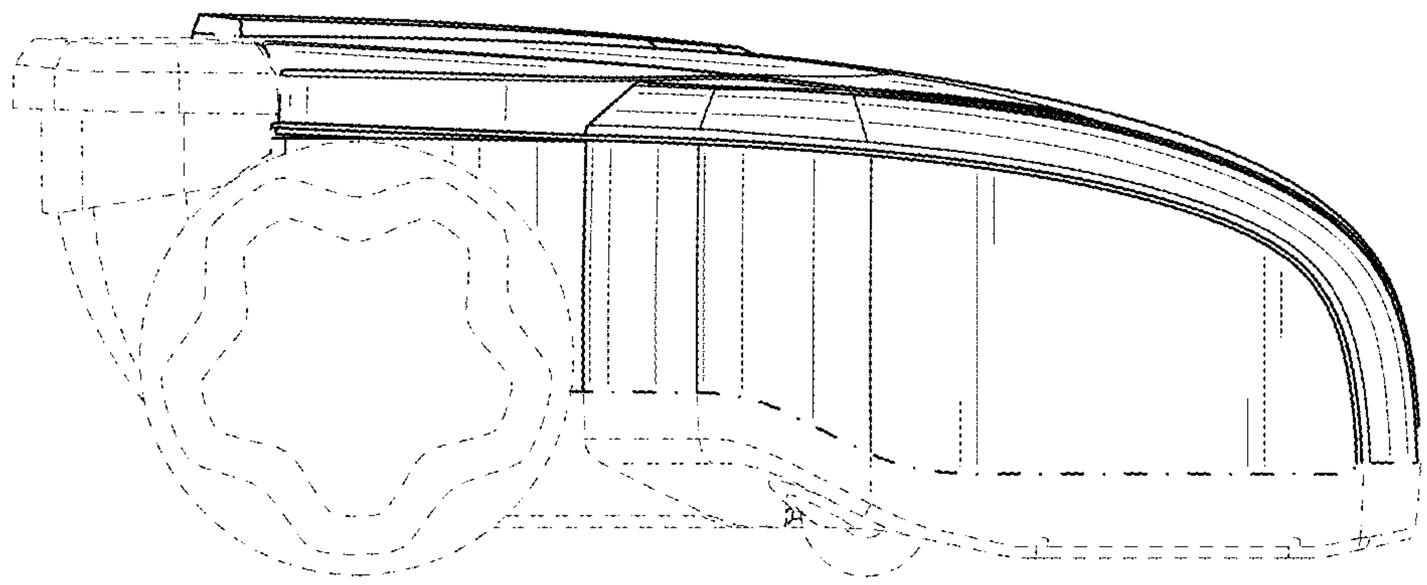

FIG. 5

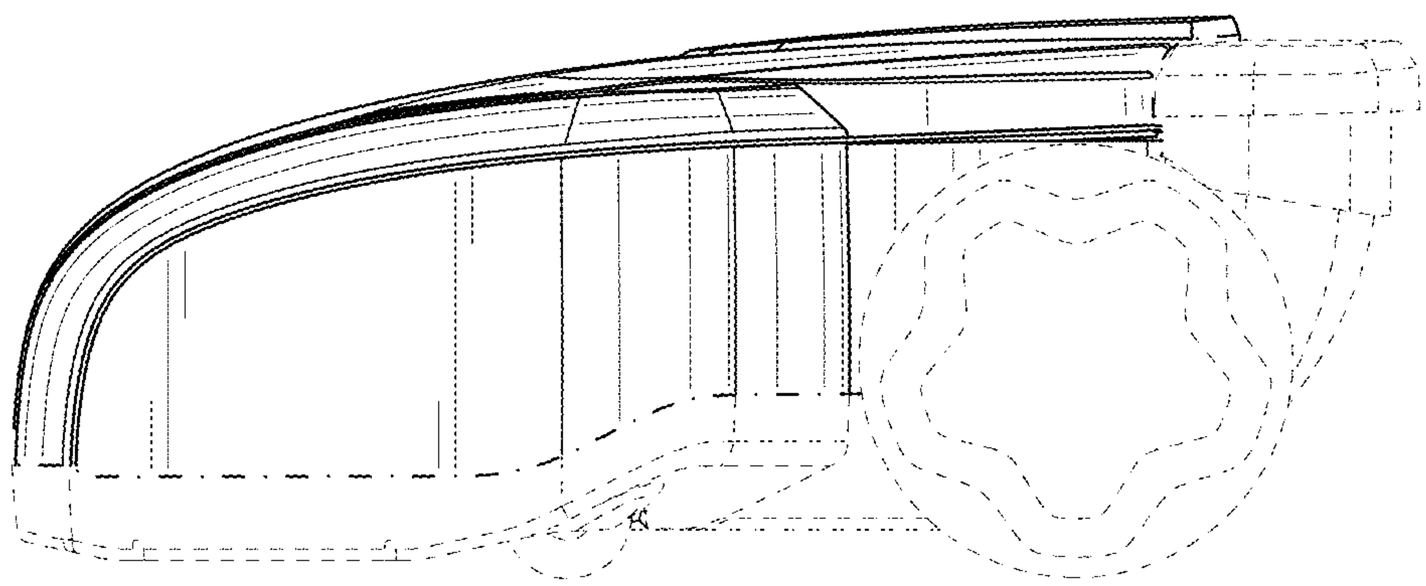

FIG. 6

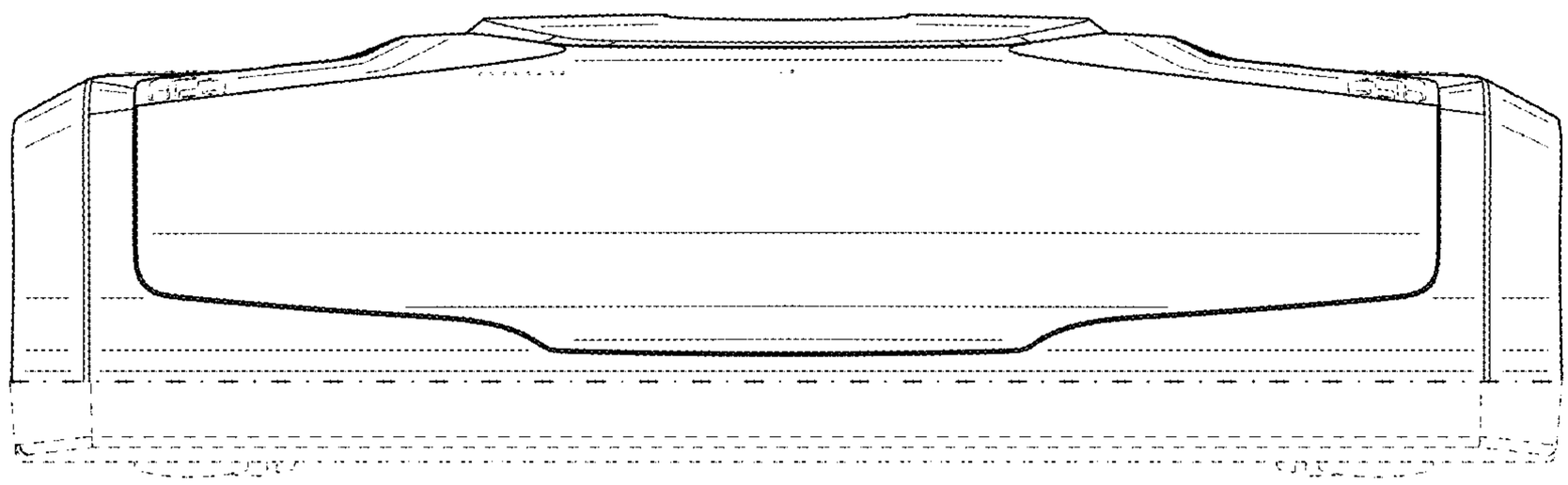

FIG. 7

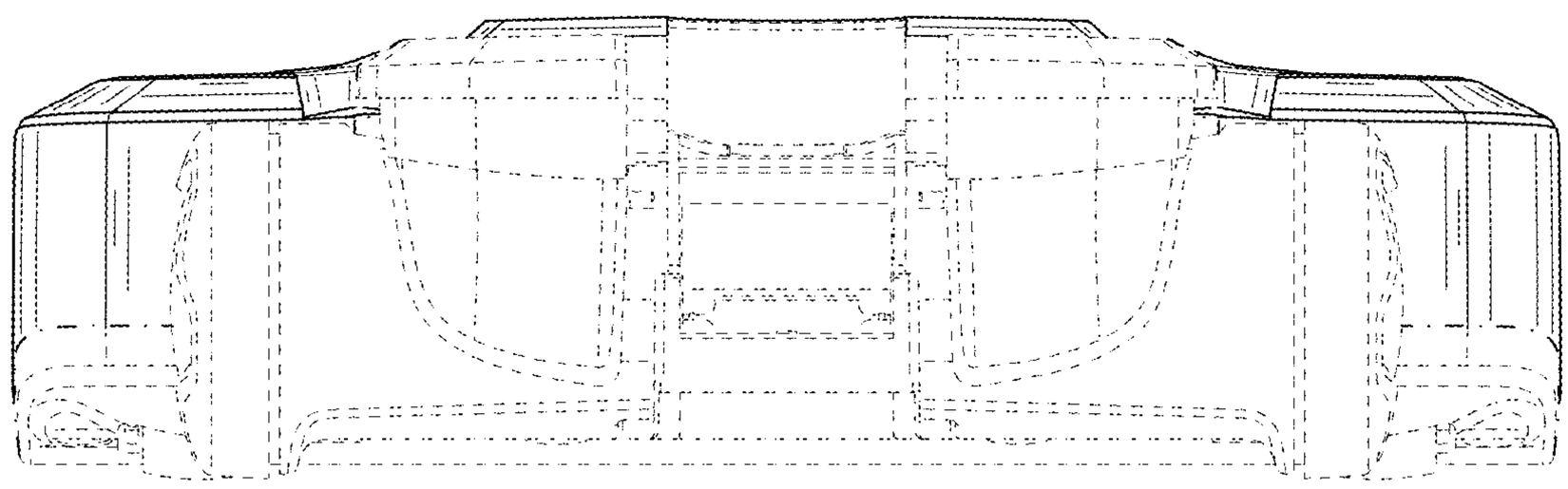

FIG. 8

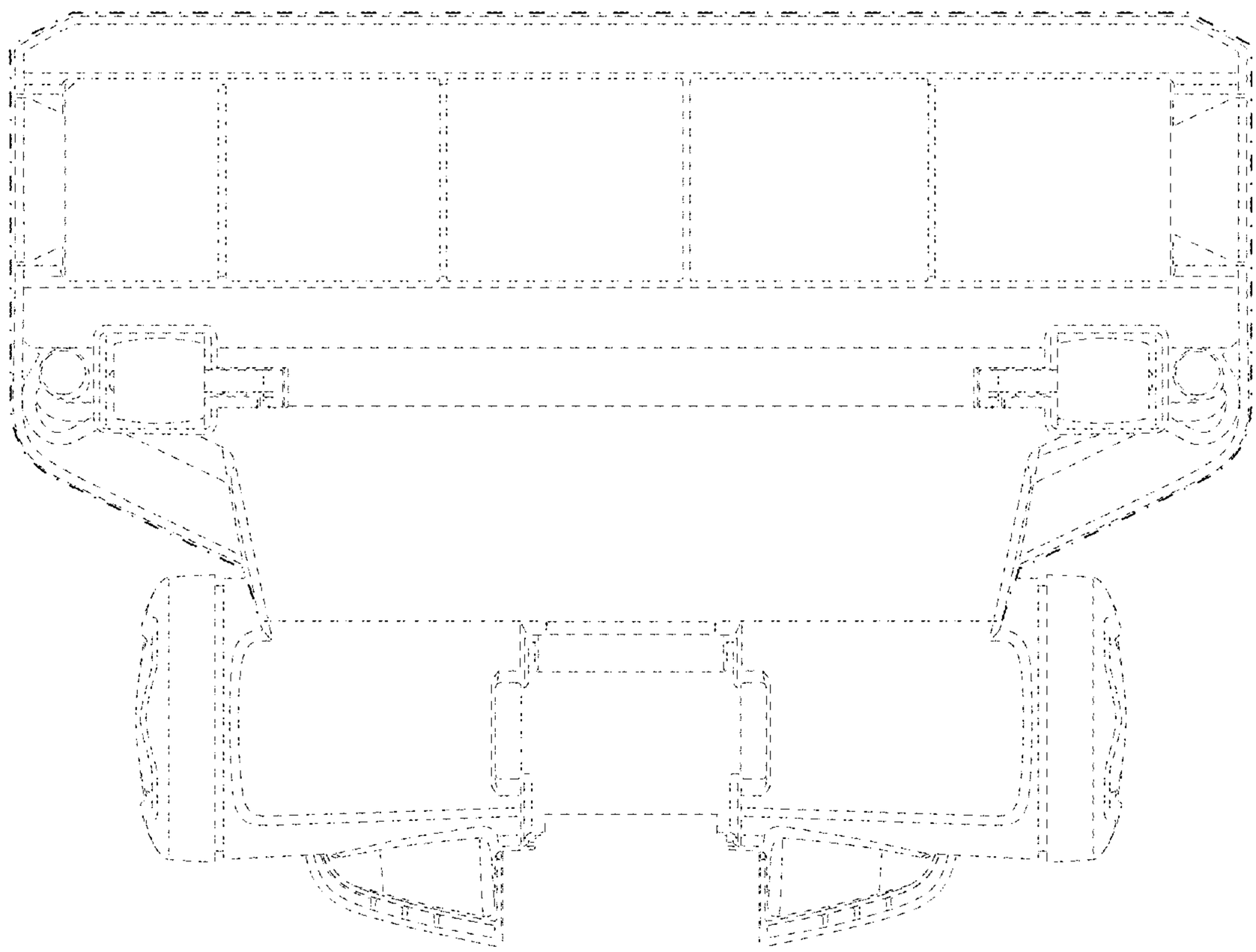

FIG. 9