US00D778514S

(12) United States Design Patent

Park et al.

(10) Patent No.: US D778,514 S
(45) Date of Patent: ** Feb. 7, 2017

(54) **ROBOT CLEANER**

(71) Applicant: **Samsung Electronics Co., Ltd.**, Suwon-si, Gyeonggi-do (KR)

(72) Inventors: **Yuna Park**, Seoul (KR); **Dong-Won Chun**, Seoul (KR); **Yeon-Young Nam**, Goyang-si (KR)

(73) Assignee: **SAMSUNG ELECTRONICS CO., LTD**, Gyeonggi-Do (KR)

(**) Term: **14 Years**

(21) Appl. No.: **29/514,820**

(22) Filed: **Jan. 16, 2015**

(30) **Foreign Application Priority Data**

Jul. 17, 2014 (KR) 30-2014-0035129

(51) **LOC (10) Cl.** **15-05**

(52) **U.S. Cl.**
USPC **D32/21**

(58) **Field of Classification Search**
USPC D32/18, 21–24, 31
CPC A47L 9/16; A47L 9/20; A47L 9/1683; A47L 9/1666; A47L 9/1608; A47L 9/2857; A47L 9/2842; A47L 9/2836; A47L 9/2847; A47L 9/2852; A47L 5/28; A47L 7/0038; G06N 3/008; E04H 4/1654
See application file for complete search history.

(56) **References Cited**

U.S. PATENT DOCUMENTS

D548,411 S * 8/2007 Schroter D32/21
D551,815 S * 9/2007 Schroeter D32/21
D593,265 S * 5/2009 Carr D32/21
D720,103 S * 12/2014 Haug D32/21
D745,757 S * 12/2015 Choi D32/21
D746,005 S * 12/2015 Cheon D32/21
D751,777 S * 3/2016 Cheon D32/21
2014/0259475 A1* 9/2014 Doughty A47L 9/0477 15/52.1
2016/0058256 A1* 3/2016 Ju A47L 9/0477 15/347

* cited by examiner

Primary Examiner — Ruth McInroy
(74) *Attorney, Agent, or Firm* — Cantor Colburn LLP

(57) **CLAIM**

The ornamental design for a robot cleaner, as shown and described.

DESCRIPTION

FIG. **1** is a front perspective view of a robot cleaner, showing our new design;
FIG. **2** is a front view thereof;
FIG. **3** is a rear view thereof;
FIG. **4** is a side view thereof;
FIG. **5** is another side view thereof;
FIG. **6** is a top view thereof;
FIG. **7** is a bottom view thereof; and,
FIG. **8** is a rear perspective view thereof.
The broken lines are for environmental purpose only and form no part of the claimed design.

1 Claim, 6 Drawing Sheets

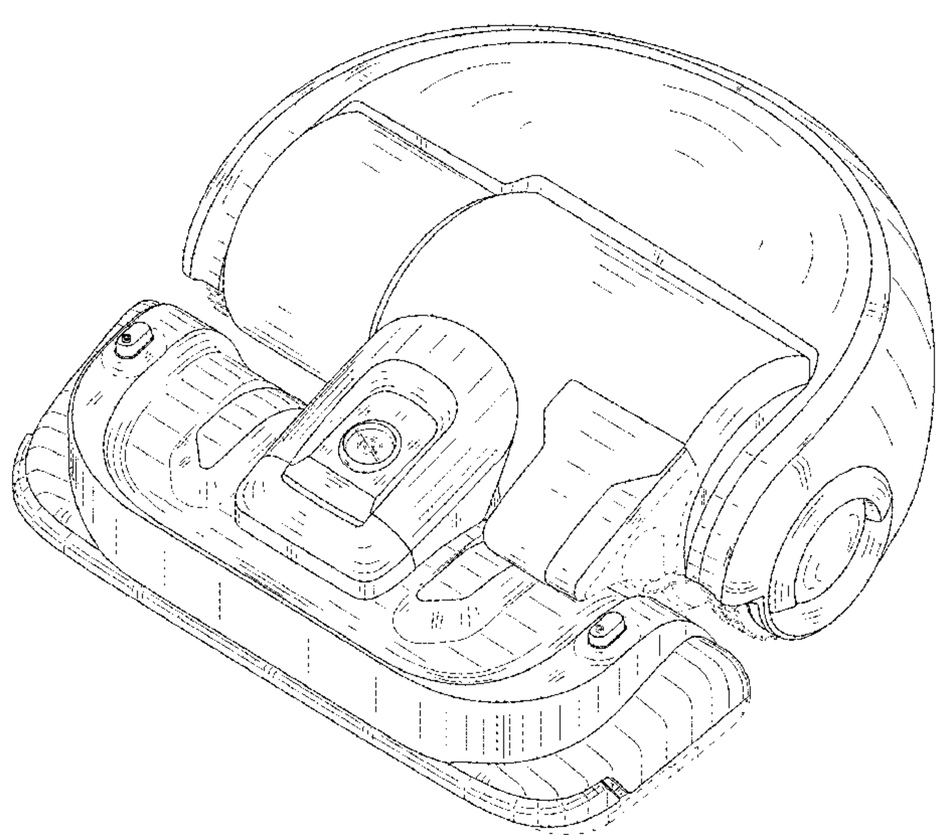

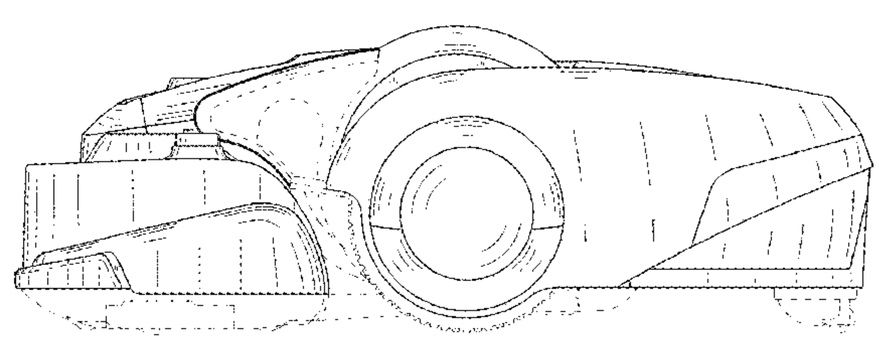

FIG. 1

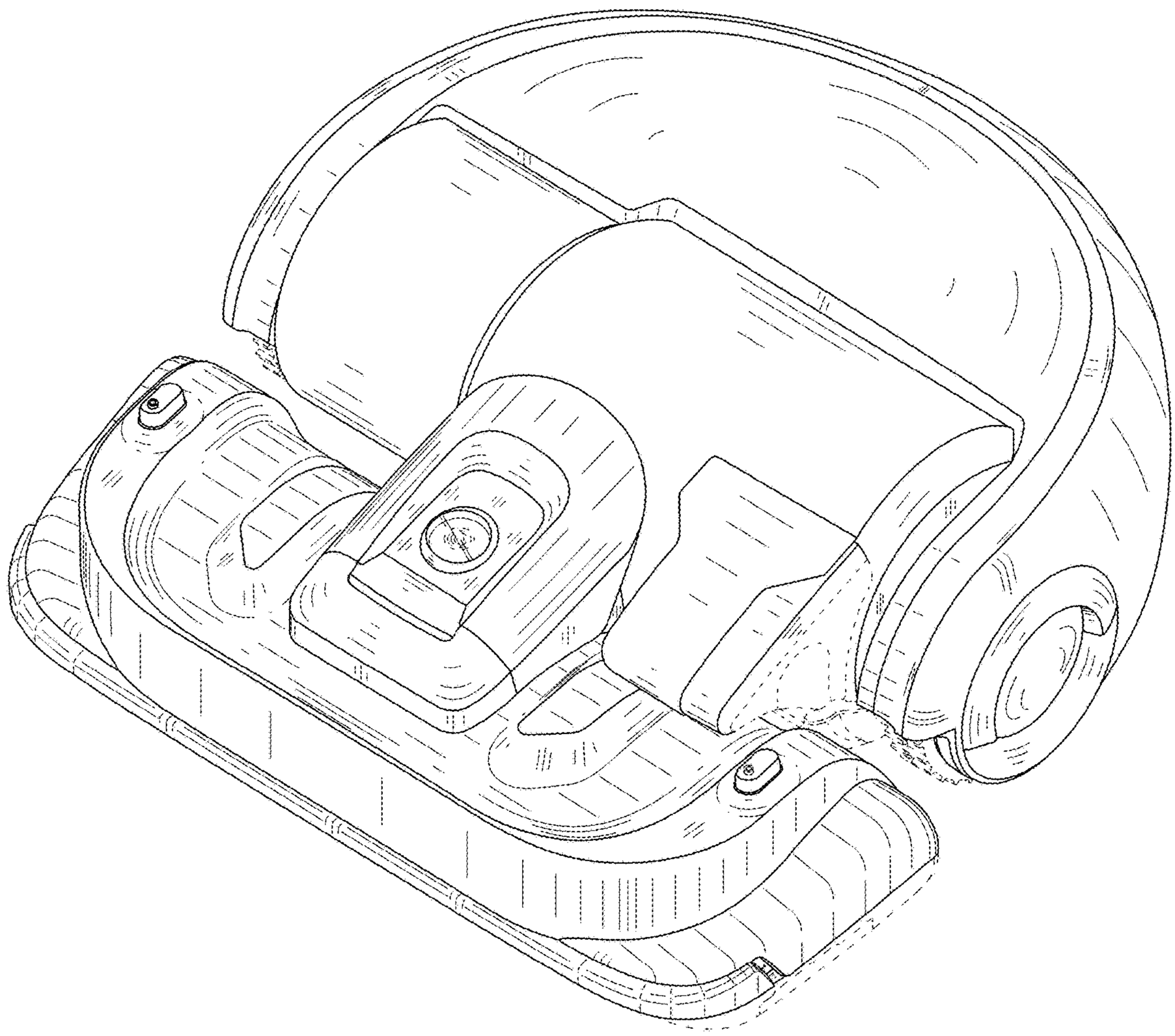

FIG. 2

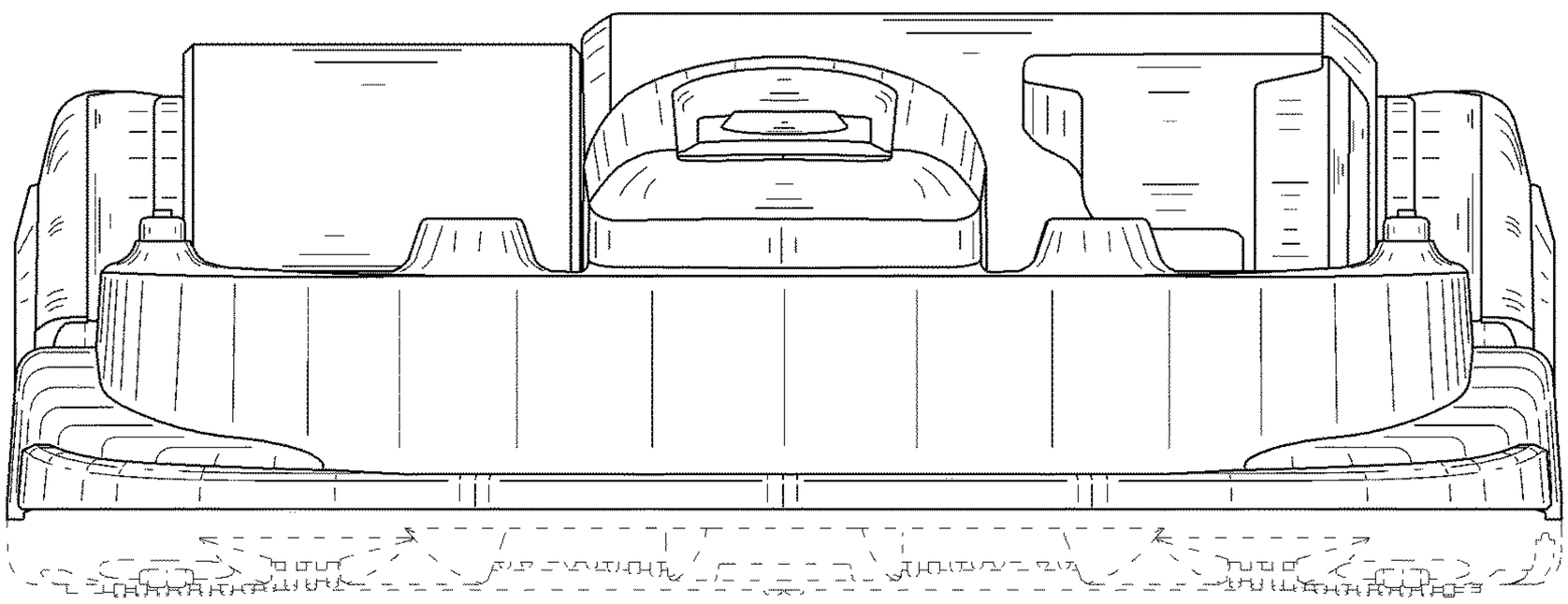

FIG. 3

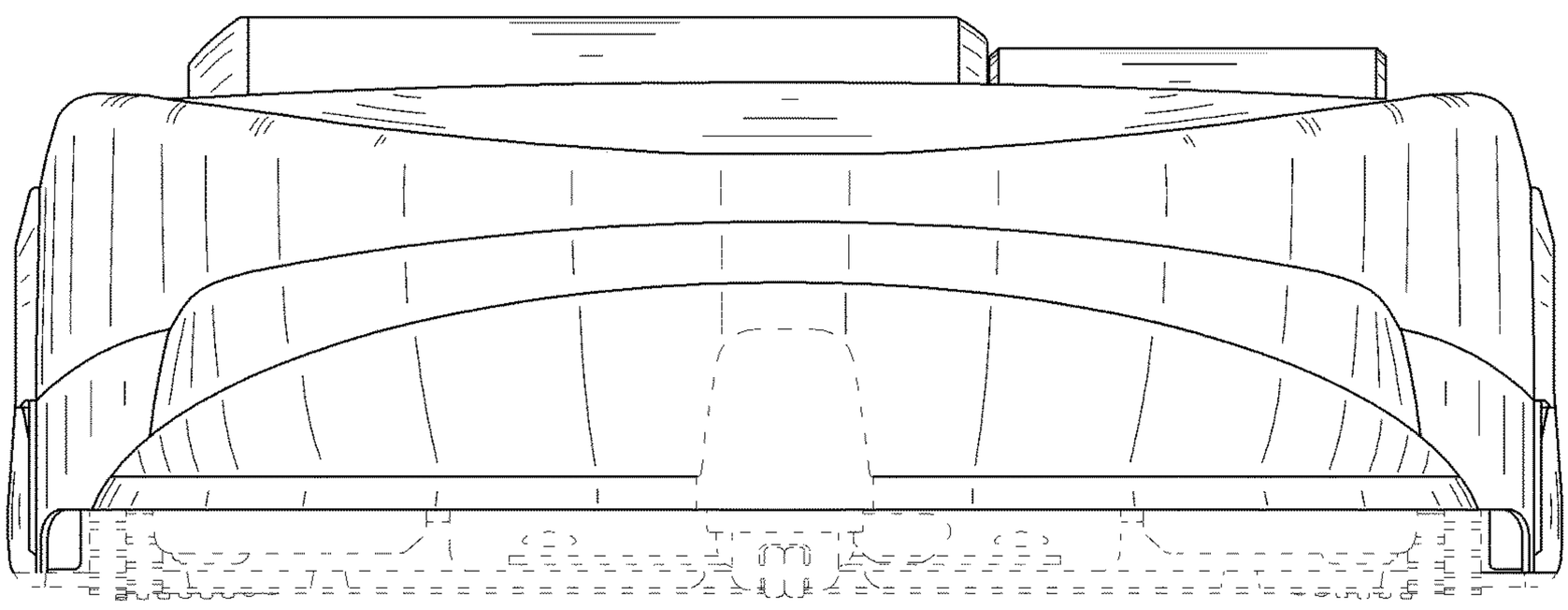

FIG. 4

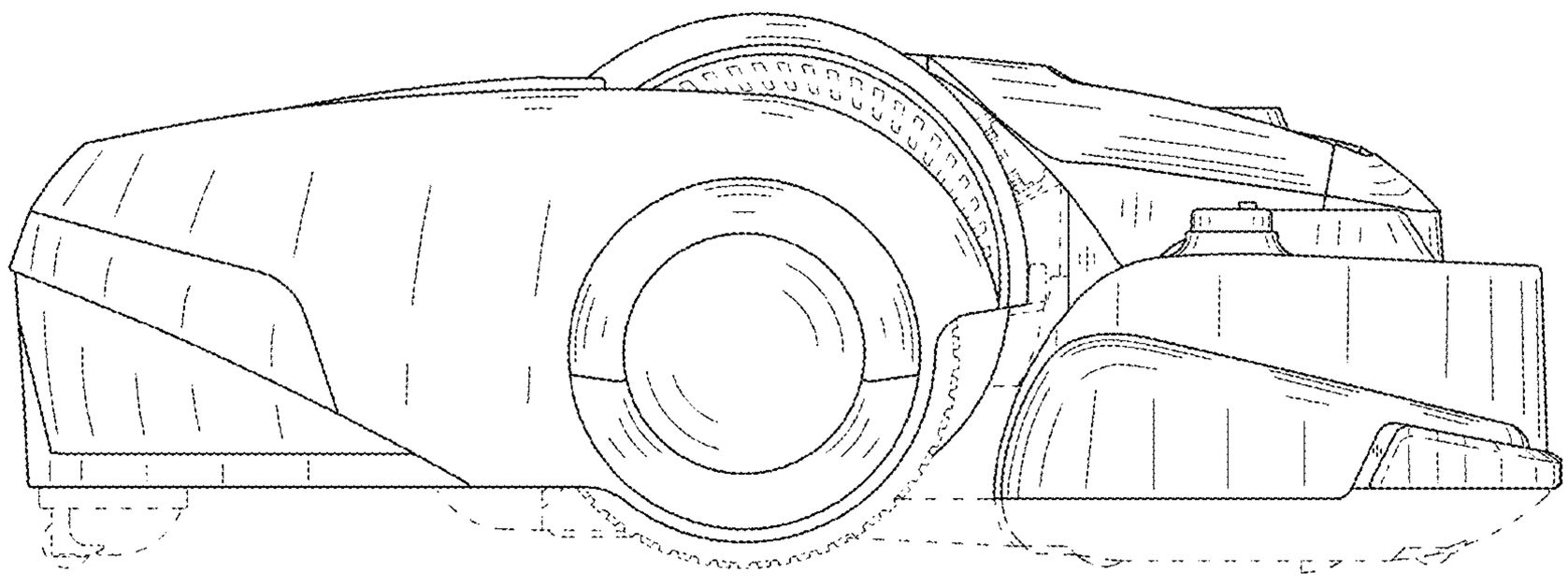

FIG. 5

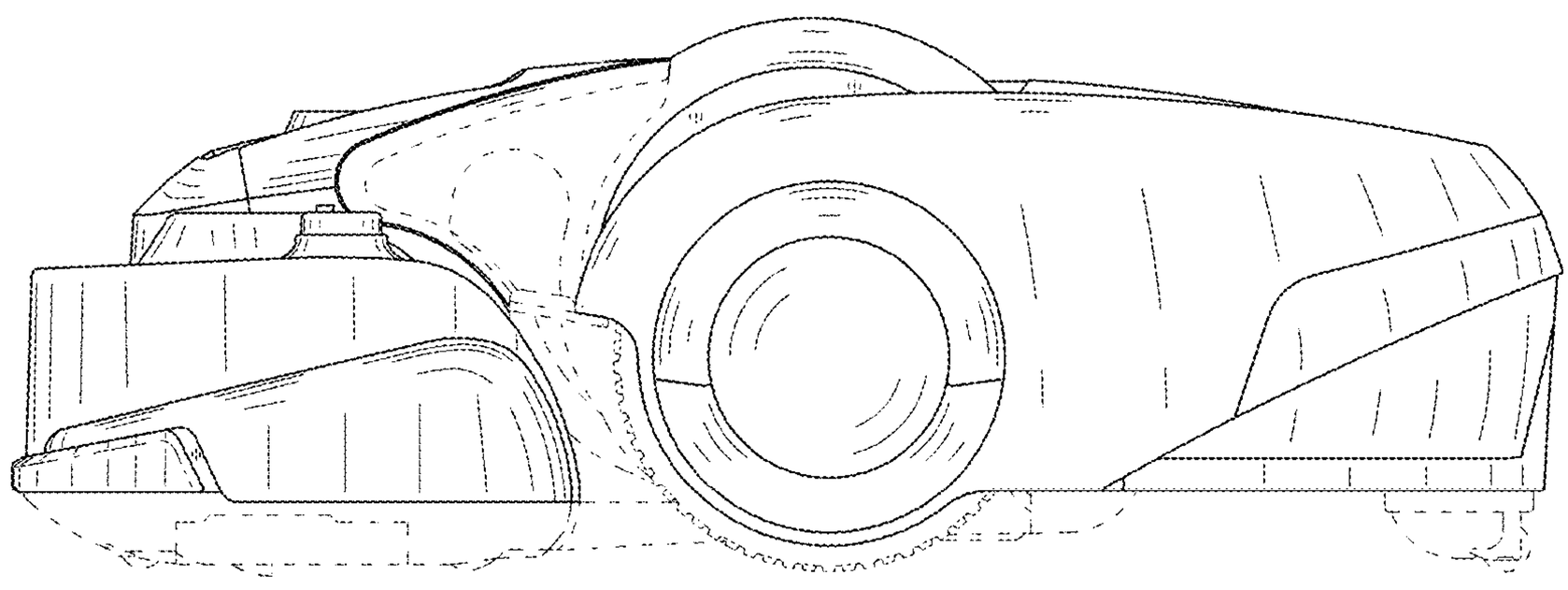

FIG. 6

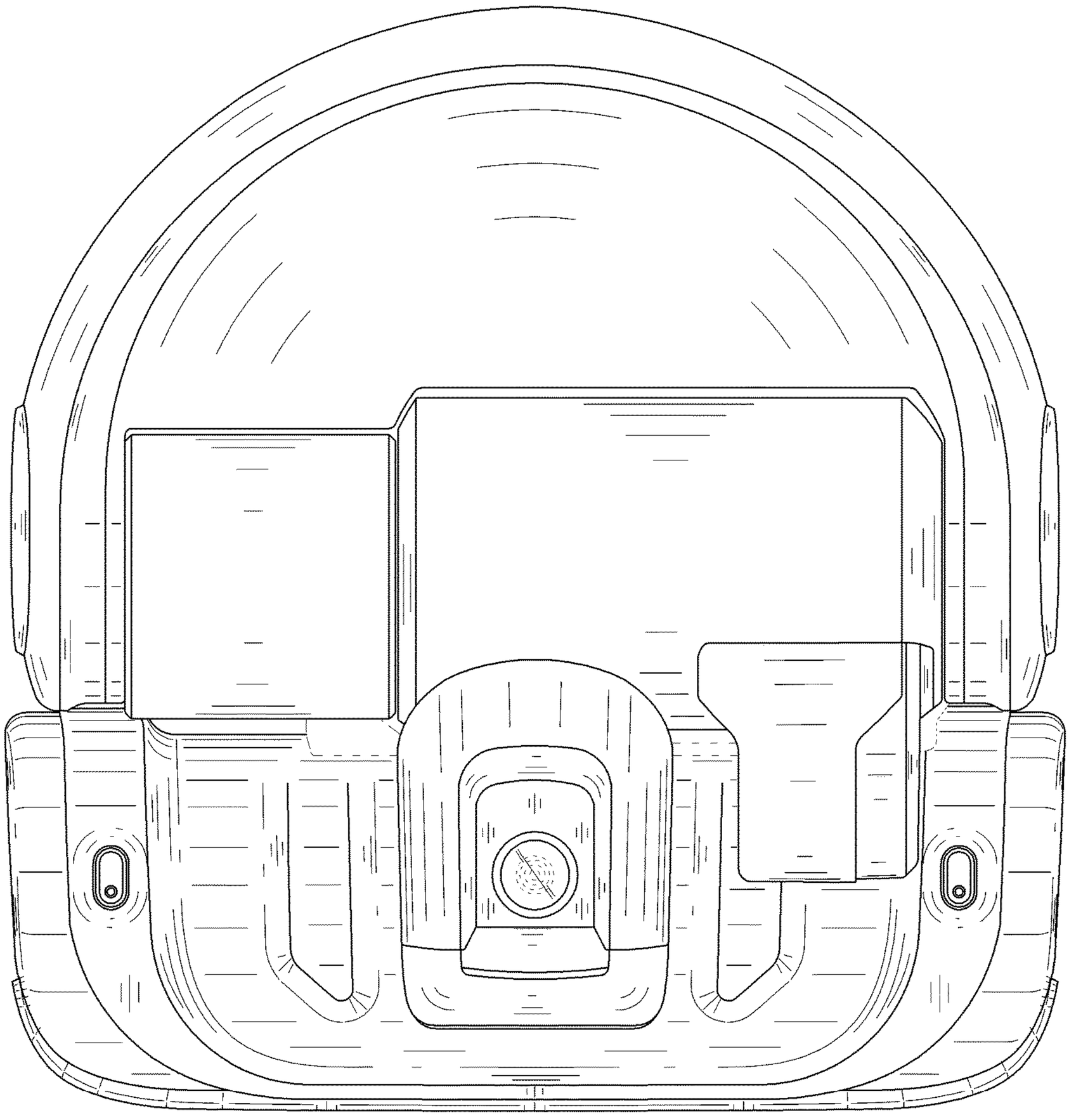

FIG. 7

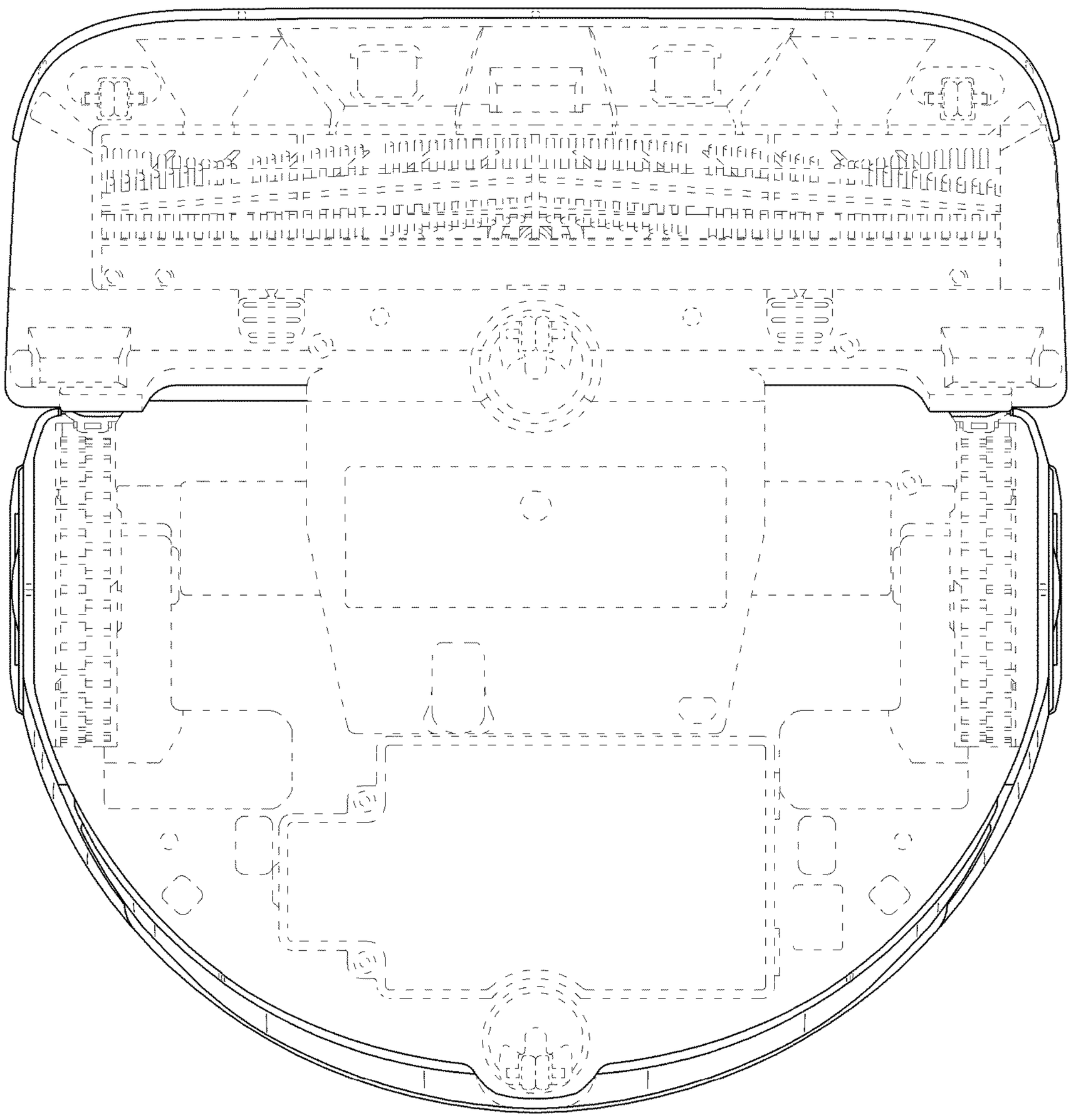
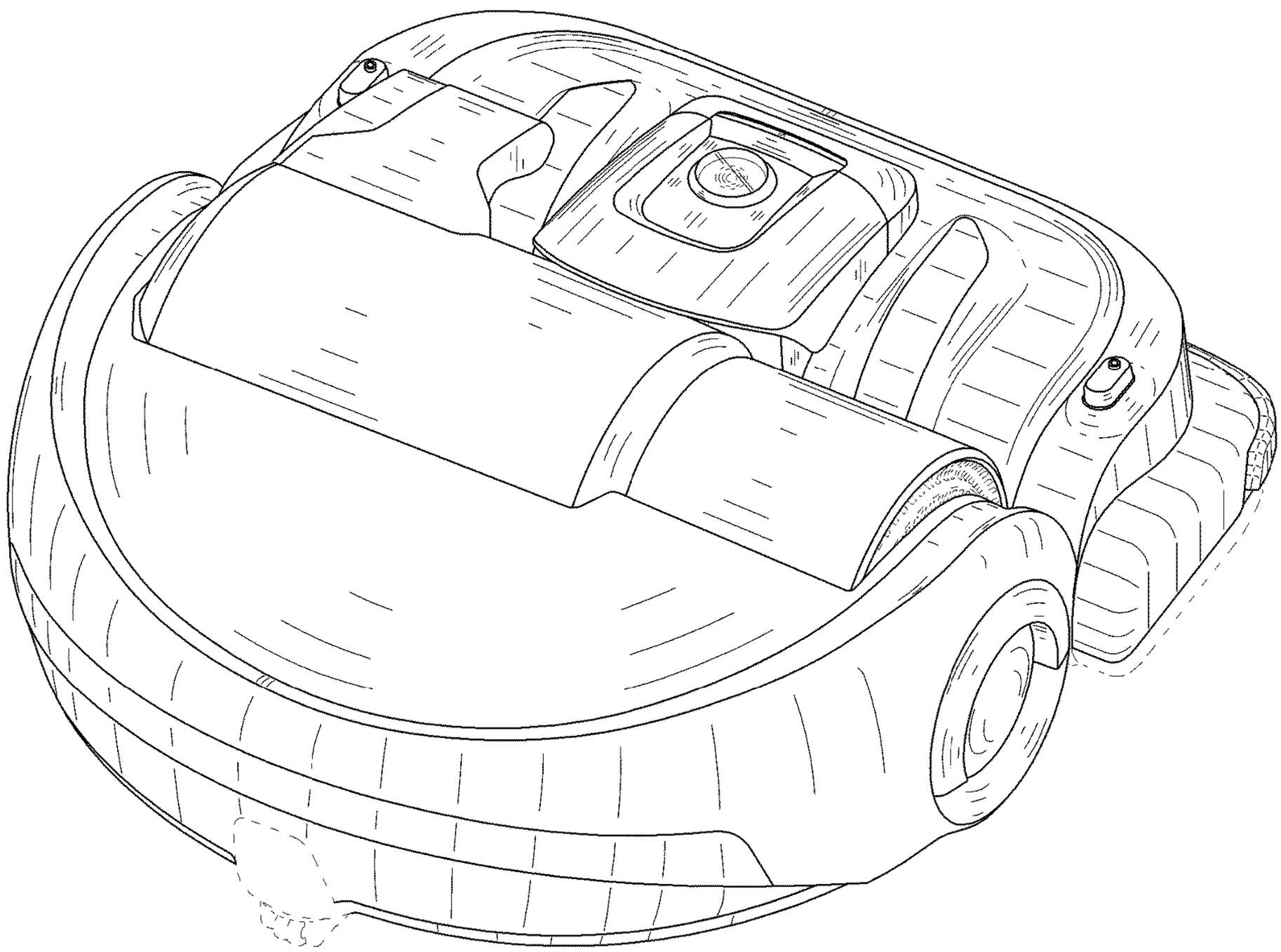
FIG. 8