US00D777195S

(12) United States Design Patent

Dain et al.

(10) Patent No.: US D777,195 S
(45) Date of Patent: ** Jan. 24, 2017

(54) **DISPLAY SCREEN WITH GRAPHICAL USER INTERFACE FOR AUTOMATED SAMPLE INCUBATOR**

(71) Applicant: **LIFE TECHNOLOGIES CORPORATION**, Carlsbad, CA (US)

(72) Inventors: **Robert Dain**, Lynnwood, WA (US); **Terence Tam**, Redmond, WA (US); **Steven Lytle**, Kirkland, WA (US); **Paul Boeschoten**, Redmond, WA (US); **Larry Rystrom**, Mill Creek, WA (US); **Jonathan Paullin**, Kirkland, WA (US)

(73) Assignee: **Life Technologies Corporation**, Carlsbad, CA (US)

(**) Term: **15 Years**

(21) Appl. No.: **29/543,099**

(22) Filed: **Oct. 21, 2015**

Related U.S. Application Data

(62) Division of application No. 29/454,809, filed on May 14, 2013, now Pat. No. Des. 743,981.

(51) **LOC (10) Cl.** **14-04**

(52) **U.S. Cl.**
USPC **D14/486**

(58) **Field of Classification Search**
USPC D14/485–495
CPC G06F 3/0481; G06F 3/04845; G06F 3/04817; G06F 17/212; G06T 13/80; G06T 15/02; H04N 1/00424
See application file for complete search history.

(56) **References Cited**

U.S. PATENT DOCUMENTS

D502,184 S * 2/2005 Glezer D14/486
D589,526 S 3/2009 Taylor et al.
D593,117 S 5/2009 Lettau et al.
D596,645 S * 7/2009 Channell D14/486
D617,332 S 6/2010 Loken et al.
D628,206 S 11/2010 Lemay
D634,331 S 3/2011 Brown
D677,326 S * 3/2013 Gleasman D18/27
D678,904 S * 3/2013 Phelan D14/492
D694,259 S * 11/2013 Klein D14/486
D729,843 S * 5/2015 Bray D14/493
D733,757 S * 7/2015 Kim D14/493
D736,829 S * 8/2015 Kim D14/493
9,292,196 B2 * 3/2016 Ording G06F 9/4443
9,294,635 B2 * 3/2016 Gowen G06F 3/0484
D753,147 S * 4/2016 Kim D14/485
D753,668 S * 4/2016 Seo D14/485
D753,670 S * 4/2016 Tian D14/485
9,311,692 B1 * 4/2016 Jia G06T 3/4092
(Continued)

Primary Examiner — Philip S Hyder
Assistant Examiner — Cary M Robinson

(57) **CLAIM**

The ornamental design for an display screen with graphical user interface for automated sample incubator, as shown and described.

DESCRIPTION

FIG. **1** is a front view of a first embodiment of an display screen with graphical user interface for automated sample incubator of our new design.
FIG. **2** is a front view of a second embodiment of an display screen with graphical user interface for automated sample incubator of our new design.
The portions of the display screen, text, and other features depicted in broken lines are not part of the claimed design. The outer edge of the display screen is understood to be congruent with the outer edge of the graphical user interface.

1 Claim, 2 Drawing Sheets

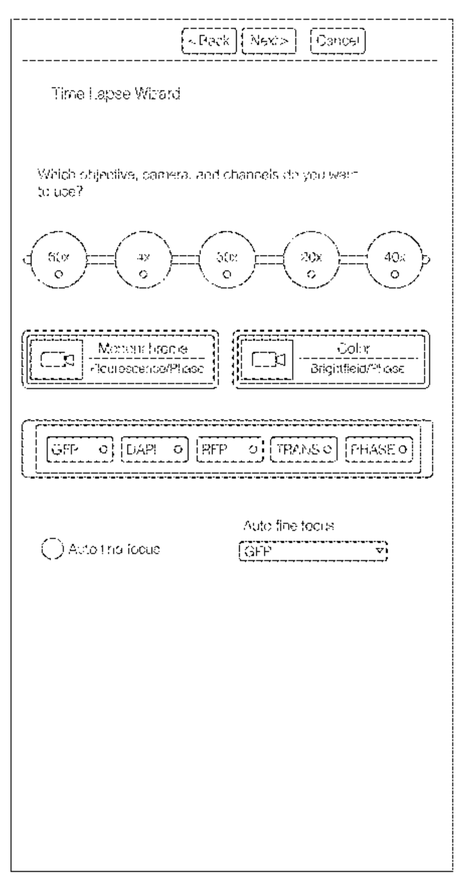

(56) **References Cited**

U.S. PATENT DOCUMENTS

9,317,963 B2 * 4/2016 Ruble G06T 15/10
9,323,418 B2 * 4/2016 DiVita G06F 3/0481
D755,202 S * 5/2016 Seo D14/485
D755,819 S * 5/2016 Gao D14/486
9,345,930 B2 * 5/2016 Hoffman A63B 24/0062
9,357,055 B2 * 5/2016 Bahn G06F 3/0481
D758,404 S * 6/2016 Lindgren D14/486
D759,106 S * 6/2016 Pal D14/486
D759,107 S * 6/2016 Pal D14/486
D759,109 S * 6/2016 Pal D14/486
D760,272 S * 6/2016 Li D14/487
D761,294 S * 7/2016 Weeresinghe D14/486
9,384,096 B2 * 7/2016 Hackborn G06F 9/461
9,390,071 B2 * 7/2016 Jang G06F 17/212
9,395,893 B1 * 7/2016 Beausoleil G06F 3/04842
D763,294 S * 8/2016 Amin D14/486
D765,090 S * 8/2016 Yang D14/485
9,417,888 B2 * 8/2016 Forstall G06F 3/0486
D766,257 S * 9/2016 Zhang D14/485
D766,294 S * 9/2016 Smith D14/486
D766,952 S * 9/2016 Gedrich D14/486
D766,961 S * 9/2016 Choi D14/487
D766,967 S * 9/2016 Giovannini D14/486
2002/0146232 A1 * 10/2002 Harradine G06F 17/30817 386/245
2004/0257921 A1 12/2004 Nishimura et al.
2007/0294415 A1 12/2007 Kelder et al.
2008/0270931 A1 10/2008 Bamford
2010/0005411 A1 1/2010 Duncker et al.
2010/0083172 A1 4/2010 Breeds et al.
2010/0306752 A1 * 12/2010 Bordelon G06F 8/4452 717/149
2013/0212505 A1 8/2013 Herold
2013/0212507 A1 8/2013 Fedoseyeva et al.
2013/0268886 A1 10/2013 Sureshkumar
2016/0004300 A1 * 1/2016 Baic G06F 3/011 345/419
2016/0155081 A1 * 6/2016 Legisa G06F 3/04817 705/7.15
2016/0188171 A1 * 6/2016 Dye G06F 3/04842 715/810
2016/0253086 A1 * 9/2016 Jiang G06F 3/048
2016/0267700 A1 * 9/2016 Huang G06F 3/04842

* cited by examiner

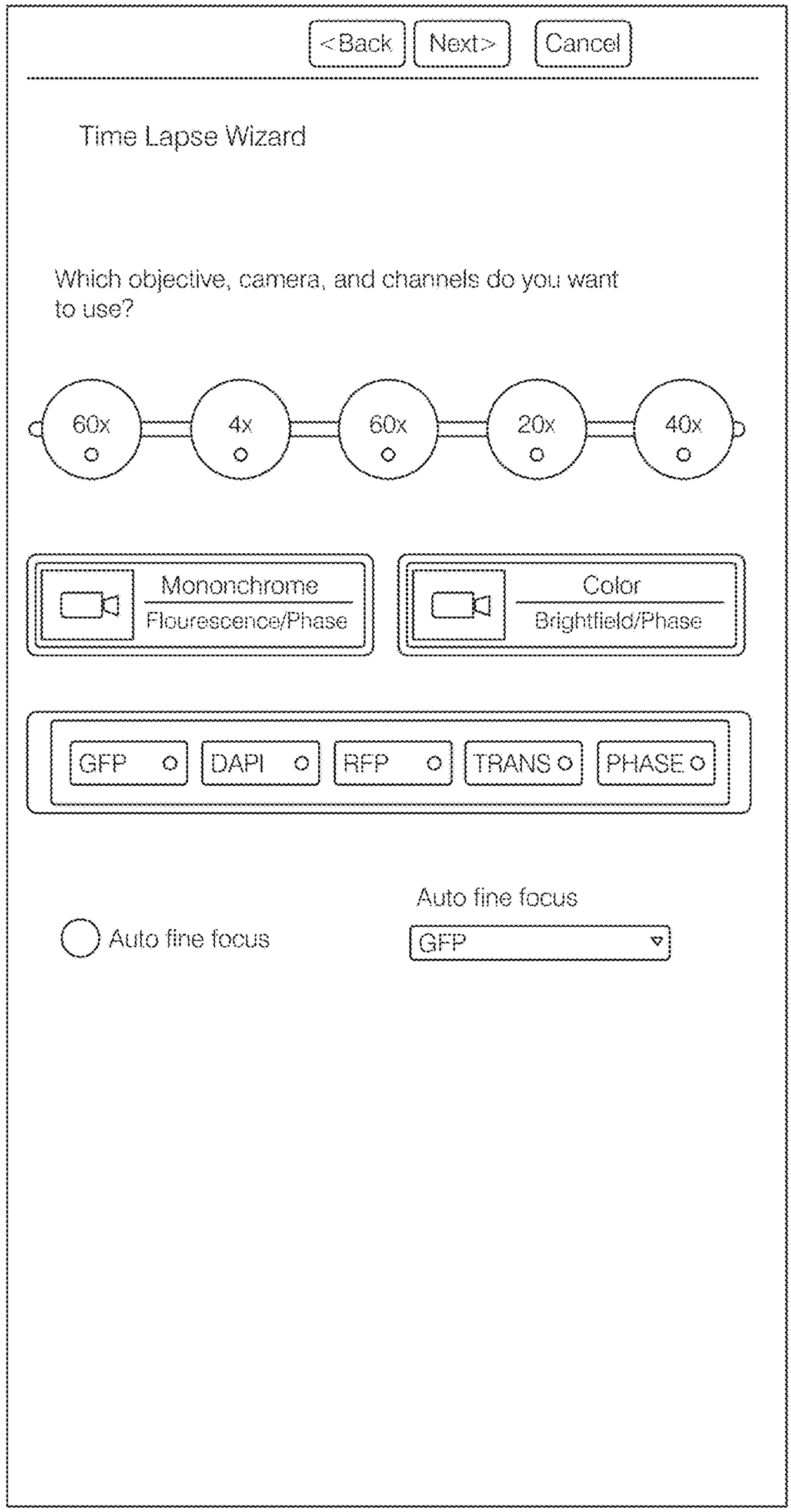
<Back
Next>
Cancel
Time Lapse Wizard
Which objective, camera, and channels do you want to use?
60x
4x
60x
20x
40x
Mononchrome
Flourescence/Phase
Color
Brightfield/Phase
GFP
DAPI
RFP
TRANS
PHASE
Auto fine focus
Auto fine focus
GFP

FIG. 1

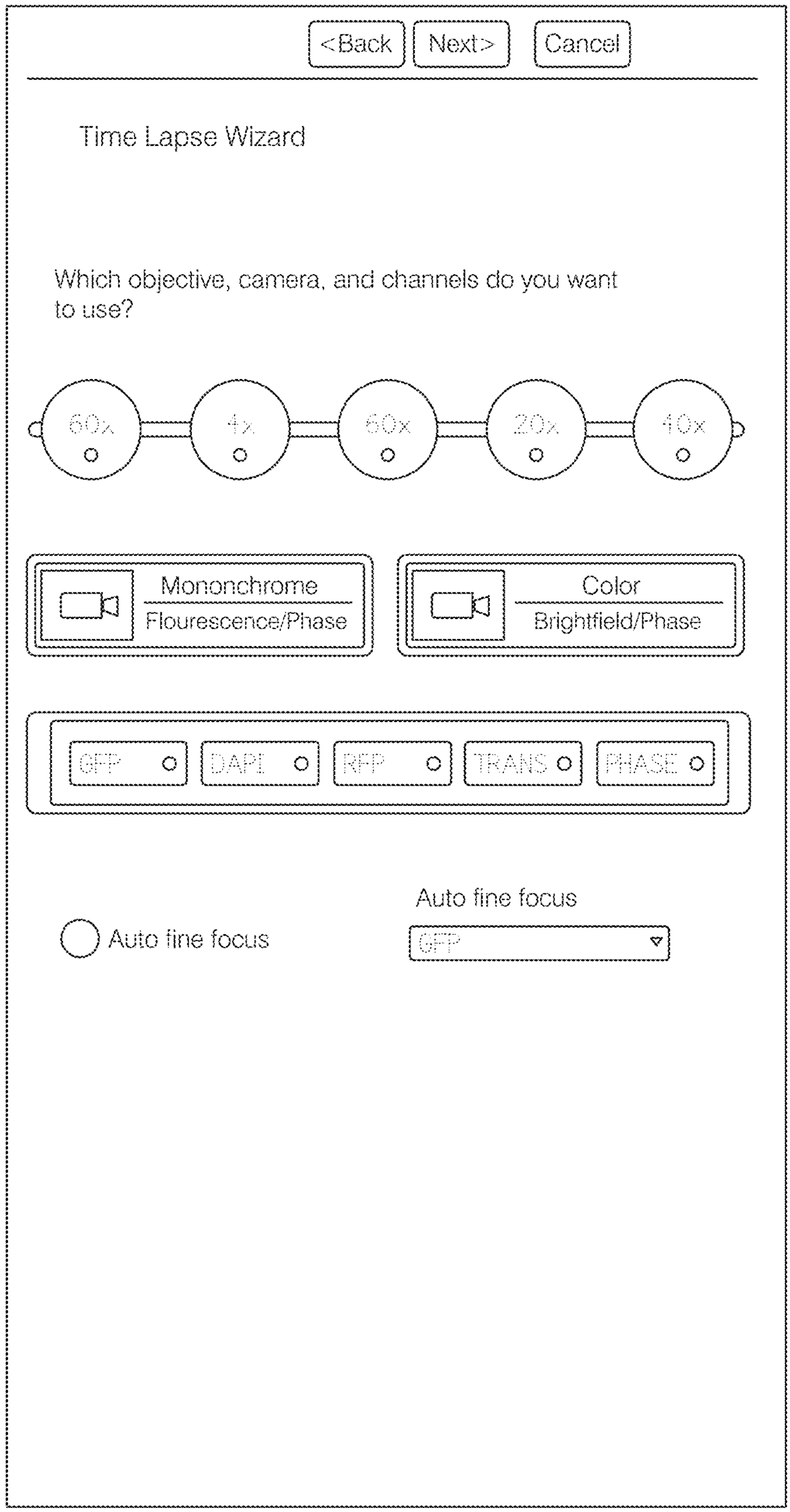
<Back
Next>
Cancel
Time Lapse Wizard
Which objective, camera, and channels do you want to use?
60x
4x
60x
20x
10x
Mononchrome
Flourescence/Phase
Color
Brightfield/Phase
GFP
DAPI
RFP
TRANS
PHASE
Auto fine focus
Auto fine focus
GFP

FIG. 2