US00D774505S

(12) United States Design Patent

Akana et al.

(10) Patent No.: US D774,505 S
(45) Date of Patent: ** *Dec. 20, 2016

(54) **ELECTRONIC DEVICE**

(71) Applicant: **Apple Inc.**, Cupertino, CA (US)
(72) Inventors: **Jody Akana**, San Francisco, CA (US); **Bartley K. Andre**, Palo Alto, CA (US); **Shota Aoyagi**, San Francisco, CA (US); **Anthony Michael Ashcroft**, San Francisco, CA (US); **Jeremy Bataillou**, San Francisco, CA (US); **Daniel J. Coster**, San Francisco, CA (US); **Daniele De Iuliis**, San Francisco, CA (US); **M. Evans Hankey**, San Francisco, CA (US); **Julian Hoenig**, San Francisco, CA (US); **Richard P. Howarth**, San Francisco, CA (US); **Jonathan P. Ive**, San Francisco, CA (US); **Duncan Robert Kerr**, San Francisco, CA (US); **Matthew Dean Rohrbach**, San Francisco, CA (US); **Peter Russell-Clarke**, San Francisco, CA (US); **Benjamin Andrew Shaffer**, San Jose, CA (US); **Mikael Silvanto**, San Francisco, CA (US); **Christopher J. Stringer**, Woodside, CA (US); **Eugene Antony Whang**, San Francisco, CA (US); **Rico Zörkendörfer**, San Francisco, CA (US)
(73) Assignee: **Apple Inc.**, Cupertino, CA (US)

(*) Notice: This patent is subject to a terminal disclaimer.
(**) Term: **14 Years**
(21) Appl. No.: **29/513,920**
(22) Filed: **Jan. 6, 2015**
(51) **LOC (10) Cl.** **14-02**
(52) **U.S. Cl.**
USPC **D14/318**
(58) **Field of Classification Search**
USPC . D14/315–327; D18/1, 2, 7, 11; 235/145 A, 235/145 R; 341/22, 23; 345/104, 156, 345/168, 169, 173; 361/679.08, 679.09, 361/679.11, 679.26, 679.27
(Continued)

(56) **References Cited**

U.S. PATENT DOCUMENTS

D264,969	S	6/1982	McGourty
4,976,435	A	12/1990	Shatford et al.

(Continued)

FOREIGN PATENT DOCUMENTS

CN	301384975	11/2010
JP	1128620	12/2001

(Continued)

OTHER PUBLICATIONS

Sony X505, available at least as early as May 8, 2005.

(Continued)

Primary Examiner — Freda S Nunn
(74) *Attorney, Agent, or Firm* — Saidman DesignLaw Group, LLC

(57) **CLAIM**

The ornamental design for an electronic device, as shown and described.

DESCRIPTION

FIG. **1** is a top front perspective view of an electronic device showing our new design in a closed position;
FIG. **2** is a bottom front perspective view thereof;
FIG. **3** is a top rear perspective view thereof;
FIG. **4** is a bottom rear perspective view thereof;
FIG. **5** is a front view thereof;
FIG. **6** is a rear view thereof;
FIG. **7** is a left side view thereof;
FIG. **8** is a right side view thereof;
FIG. **9** is a top view thereof;
FIG. **10** is a bottom view thereof;
FIG. **11** is a top front perspective view showing our new design in an open position;
FIG. **12** is a top rear perspective view thereof;
FIG. **13** is a bottom front perspective view thereof;
FIG. **14** is a bottom rear perspective view thereof;
FIG. **15** is a front view thereof;
FIG. **16** is a rear view thereof;
FIG. **17** is a left side view thereof;
FIG. **18** is a right side view thereof;
FIG. **19** is a top view thereof; and,
FIG. **20** is a bottom view thereof.

1 Claim, 18 Drawing Sheets

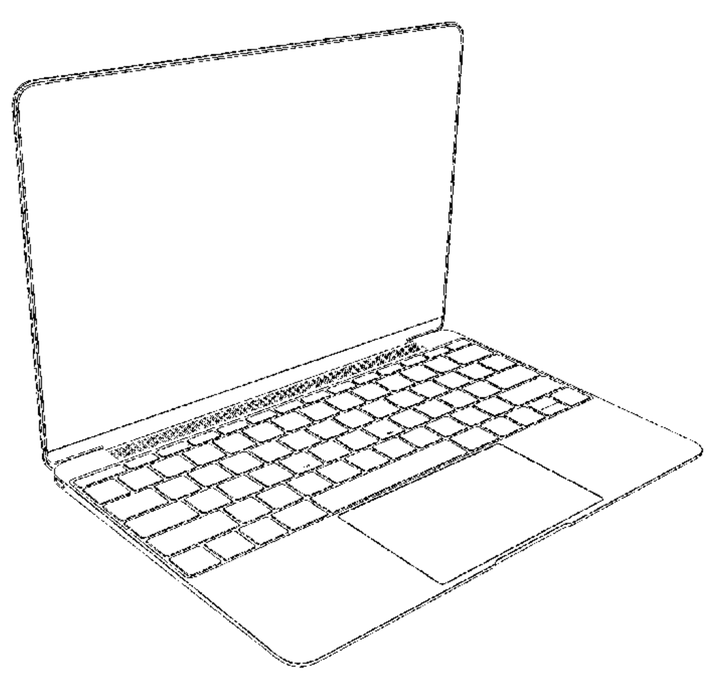

(58) **Field of Classification Search**
CPC G06F 1/16; G06F 1/1616; G06F 1/1626; G06F 1/1632; G06F 1/1613; G06F 1/1601; G06F 1/1618; G06F 1/162; G06F 1/166; G06F 1/1654; G06F 1/1681; H01R 35/02; H03M 11/00; G09B 13/04; H03K 17/94; G09G 5/00; F16M 11/10; H05K 5/00; H04M 1/0237
See application file for complete search history.

(56) **References Cited**

U.S. PATENT DOCUMENTS

5,192,082 A 3/1993 Inoue et al.
D345,346 S 3/1994 Alfonso et al.
D349,923 S 8/1994 Billings et al.
D359,306 S 6/1995 Lande et al.
D362,272 S 9/1995 Luong
D362,461 S 9/1995 Luong
D378,686 S 4/1997 Proctor et al.
5,661,632 A 8/1997 Register
D385,299 S 10/1997 Adams
D386,521 S 11/1997 Eisenbaum
5,694,292 A 12/1997 Paulsel et al.
5,694,294 A 12/1997 Ohashi et al.
5,713,790 A 2/1998 Lin
D391,927 S 3/1998 Faranda et al.
D396,452 S 7/1998 Naruki
5,793,355 A 8/1998 Youens
D399,526 S 10/1998 Brady
D402,310 S 12/1998 Hendricks
D410,028 S 5/1999 Fyffe
D412,940 S 8/1999 Kato et al.
5,964,661 A 10/1999 Dodge
D416,238 S 11/1999 Irie et al.
6,038,128 A 3/2000 Hood et al.
D425,558 S 5/2000 Tarpenning et al.
D425,874 S 5/2000 Tanimura
6,067,224 A * 5/2000 Nobuchi G06F 1/1688 361/679.21
D430,117 S 8/2000 Sachs et al.
D430,169 S 8/2000 Scibora
D431,821 S 10/2000 Mizuno
6,166,737 A 12/2000 Lee et al.
D437,860 S 2/2001 Suzuki et al.
D445,787 S 7/2001 Francis
6,254,477 B1 7/2001 Sasaki et al.
D448,810 S 10/2001 Goto
D449,606 S 10/2001 Lee et al.
D450,713 S 11/2001 Matsamitsu et al.
D451,505 S 12/2001 Iseki et al.
D452,250 S 12/2001 Chan
D453,333 S 2/2002 Chen
D458,252 S 6/2002 Palm et al.
D463,797 S * 10/2002 Andre D14/327
D469,109 S 1/2003 Andre et al.
D472,245 S 3/2003 Andre et al.
D481,036 S 10/2003 Wentt
6,657,854 B2 12/2003 Horii et al.
D486,823 S 2/2004 Kuo
D487,457 S 3/2004 Liu
D487,742 S 3/2004 Huang et al.
D489,717 S 5/2004 Hsieh
D490,420 S 5/2004 Solomon et al.
D491,177 S 6/2004 Andre et al.
D491,933 S 6/2004 Guo
D491,936 S 6/2004 Jao
6,744,623 B2 6/2004 Numano et al.
D493,785 S 8/2004 Andre et al.
D494,164 S 8/2004 Wu et al.
6,771,494 B2 * 8/2004 Shimano G06F 1/1616 345/173
D497,618 S 10/2004 Andre et al.
D501,472 S 2/2005 Kumano
D501,660 S 2/2005 Kumano
6,876,546 B2 4/2005 Tsao
D504,889 S 5/2005 Andre et al.
6,932,525 B2 8/2005 Trotman
D512,997 S 12/2005 Lee et al.
6,972,946 B2 12/2005 Hamada et al.
D513,509 S 1/2006 Kawa
D517,063 S 3/2006 Nakajima et al.
7,012,802 B2 3/2006 Nakajima et al.
7,035,665 B2 4/2006 Kido et al.
D523,429 S 6/2006 Lin
D524,306 S 7/2006 Yun et al.
D526,999 S 8/2006 Tago
D527,730 S 9/2006 Dong
D529,907 S 10/2006 Dong
D533,550 S 12/2006 Yamada
D547,310 S 7/2007 Yoon
D556,192 S 11/2007 Jeong et al.
D558,752 S 1/2008 Andre et al.
D558,753 S 1/2008 Andre et al.
D571,364 S 6/2008 Andre et al.
D572,246 S 7/2008 Andre et al.
D572,247 S 7/2008 Andre et al.
D574,378 S 8/2008 Andre et al.
7,426,113 B2 9/2008 Ikeno et al.
D581,411 S 11/2008 Kumano
D589,507 S 3/2009 Andre et al.
D600,688 S 9/2009 Andre et al.
D601,556 S 10/2009 Iseki
D603,861 S 11/2009 Hong et al.
D604,289 S 11/2009 Andre et al.
D604,290 S 11/2009 Andre et al.
D604,291 S 11/2009 Andre et al.
D604,292 S 11/2009 Andre et al.
D604,293 S 11/2009 Andre et al.
D604,294 S 11/2009 Andre et al.
D606,068 S 12/2009 Hong et al.
D606,534 S 12/2009 Hong et al.
D606,988 S 12/2009 Andre et al.
D606,989 S 12/2009 Andre et al.
D607,450 S 1/2010 Morishita et al.
7,660,104 B2 2/2010 Ligtenberg
D611,043 S 3/2010 Andre et al.
D611,044 S 3/2010 Andre et al.
D611,045 S 3/2010 Andre et al.
D611,469 S 3/2010 Andre et al.
D612,843 S 3/2010 Andre et al.
D613,284 S 4/2010 Solomon et al.
D616,880 S * 6/2010 Andre D14/318
D616,881 S 6/2010 Andre et al.
D617,789 S 6/2010 Akana et al.
7,733,636 B2 6/2010 Kobayashi et al.
D621,409 S 8/2010 Andre et al.
D621,825 S 8/2010 Andre et al.
D622,268 S 8/2010 Hong et al.
D623,645 S 9/2010 Andre et al.
D625,716 S 10/2010 Andre et al.
D625,717 S 10/2010 Andre et al.
D633,087 S 2/2011 Andre et al.
D633,488 S * 3/2011 Kim D14/315
D633,907 S 3/2011 Andre et al.
D635,566 S 4/2011 Andre et al.
7,948,752 B2 5/2011 Tatsukami et al.
D639,295 S 6/2011 Andre et al.
D642,172 S 7/2011 Akana et al.
D642,560 S 8/2011 Akana et al.
D648,333 S 11/2011 Andre et al.
D648,334 S 11/2011 Andre et al.
D652,032 S * 1/2012 Akana D14/318
D654,072 S * 2/2012 Andre D14/318
D655,704 S 3/2012 Akana et al.
8,139,352 B2 3/2012 Yamamoto et al.
D657,786 S 4/2012 Andre et al.
D661,296 S 6/2012 Akana et al.
D662,497 S 6/2012 Akana et al.
D664,537 S 7/2012 Hu et al.
8,223,487 B2 7/2012 Chen et al.
8,238,090 B2 8/2012 Watanabe
8,339,775 B2 12/2012 Degner et al.
D674,382 S 1/2013 Andre et al.
D676,437 S 2/2013 Akana et al.

(56) **References Cited**

U.S. PATENT DOCUMENTS

D676,438	S	2/2013	Akana et al.	
D679,704	S	4/2013	McManigal et al.	
D679,705	S *	4/2013	McManigal	D14/318
D682,821	S *	5/2013	Kim	D14/315
D685,784	S	7/2013	Ma	
D686,205	S	7/2013	Akana et al.	
D687,030	S	7/2013	Andre et al.	
D687,031	S	7/2013	Chen et al.	
D691,128	S	10/2013	Akana et al.	
D691,129	S	10/2013	Akana et al.	
D694,748	S	12/2013	Okuley et al.	
D696,244	S	12/2013	Akana et al.	
D696,569	S	12/2013	Luo	
D696,660	S	12/2013	Chen et al.	
D696,661	S	12/2013	Chen et al.	
8,687,359	B2	4/2014	Thobald et al.	
8,734,036	B2	5/2014	Hirsch	
D706,759	S	6/2014	Myung et al.	
D706,772	S	6/2014	Koyama et al.	
D708,176	S	7/2014	Akana et al.	
D708,179	S	7/2014	Andre et al.	
D717,787	S *	11/2014	Jung	D14/315
D719,149	S *	12/2014	Matsuoka	D14/318
8,947,874	B2	2/2015	Andre et al.	
D723,539	S	3/2015	Andre et al.	
D729,227	S	5/2015	Fukuoka	
D741,316	S	10/2015	Andre et al.	
2005/0008418	A1	1/2005	Green	
2005/0180794	A1	8/2005	Parkinson	
2005/0207817	A1	9/2005	Jenkins	
2006/0147239	A1	7/2006	Kuriss	
2006/0257191	A1	11/2006	Artus	
2008/0074833	A1	3/2008	Chien et al.	
2010/0067182	A1	3/2010	Tanaka et al.	
2011/0255727	A1 *	10/2011	Azuchi	G06F 1/1616 381/333
2012/0099263	A1	4/2012	Lin	

FOREIGN PATENT DOCUMENTS

JP	1438161	4/2012
JP	1469539	5/2013
KR	30-0608518-0000	8/2011
KR	30-0613298-0000	9/2011
KR	30-0687340-0000	4/2013

OTHER PUBLICATIONS

HP Compaq Tablet PC Tc 1100, http://web.archive.org/web/20040726084509/h_18000.www1.hp.com/products/tabletpc/, downloaded Aug. 27, 2004.

Tablet PC V1100, http://web.archive.org/web/20040714060448/www.viewsonic.com/products/desktopdisplays/tabletpc/tabletpcv1100/, downloaded Aug. 27, 2004.

VIA Tablet PC Reference Design: The Digital Notepad, http://www.via.com/en/initiatives/spearhead/information-pc/, downloaded Aug. 27, 2004.

ViewPad 1000, http://www.viewsonic.com/support/mobilewireless/tabletpc/viewpad1000, index.htm, downloaded Aug. 27, 2004.

Photographs of Sony VAIO PCG-4G1L, available at least as early as May 8, 2006.

Apple PowerBook G4 Titanium, available at least as early as Jan. 1, 2001.

Apple PowerBook G4 Aluminum, available at least as early as Jan. 1, 2003.

Apple MacBook Pro, available at least as early as Jan. 10, 2006.

Apple MacBook Air, available Jan. 15, 2008, http://images.apple.com/macbookair/images/design_gal01_20080115.jpg.

Apple MacBook Air, available Jan. 15, 2008, http://images.apple.com/macbookair/images/design_gal02_20080115.jpg.

Apple MacBook Air, available Jan. 15, 2008, http://images.apple.com/macbookair/images/design_gal03_20080115.jpg.

Apple MacBook Air, available Jan. 15, 2008, http://images.apple.com/macbookair/images/design_gal04_20080115.jpg.

Apple MacBook Air, available Jan. 15, 2008, http://images.apple.com/macbookair/images/design_thinair20080115.

Apple MacBook Air, available Jan. 15, 2008, http://images.apple.com/macbookair/images/design_displayair20080115.jpg.

Apple MacBook Air, available Jan. 15, 2008, http://images.apple.com/macbookair/images/design_keyboardair20080115.jpg.

Apple MacBook Air, available Jan. 15, 2008, http://images.apple.com/macbookair/images/design_gal08_20080115.jpg.

Appendix in U.S. Appl. No. 29/201,636, entitled "Electronic Device" filed Mar. 17, 2004, now U.S. Pat. No. D. 504,889.

Olidata Altro, available at least as early as Jun. 1, 2009.

Olidata Altro, http://notebookitalia.it/olidata-altro-italian-style-notebook-culv-5674.html, published Mar. 3, 2009.

Rudi, 13-inch MacBook Air has a modern interior, Nov. 2, 2011, prohardver, 2pgs.

U.S. Appl. No. 29/513,921 of Jody Akana et al, titled "Electronic Device", filed Jan. 6, 2015 (unpublished).

Sharp Corporation, Sharp Releases Notebook PC with Optical Sensor LCD Pad, "Mebius", http://www.sharp.co.jp/corporate/news/090421-a.html, available as early as Apr. 21, 2009.

Designboom, Lenovo Yoga 3 Pro Laptop's Flexible-Use Stabilized by Watchband Hinge, http://www.designboom.com/technology/lenovo-yoga-3-pro-laptop-10-10-2014/, available as early as Oct. 10, 2014.

Mark Gurman, Apple's next major Mac revealed: the radically new 12-inch MacBook Air, https://9to5mac.com/2015/01/06/macbook-air-12-inch-redesign/, available as early as Jan. 6, 2015.

Best Buy Co., Inc., http://www.bestbuy.com/site/olspage.jsp?id=cat13506&type=page&skuId=9441909&productId=1218105184065&navigation=next&count=1&chk=true& h=387, available as early as Sep. 4, 2009.

17-inch Apple MacBook Pro Review, http://www.laptopmag.com/uploadedimages/review/laptops/2009/apple/macbook_pro_2561g.jpg, available as early as Feb. 25, 2009.

* cited by examiner

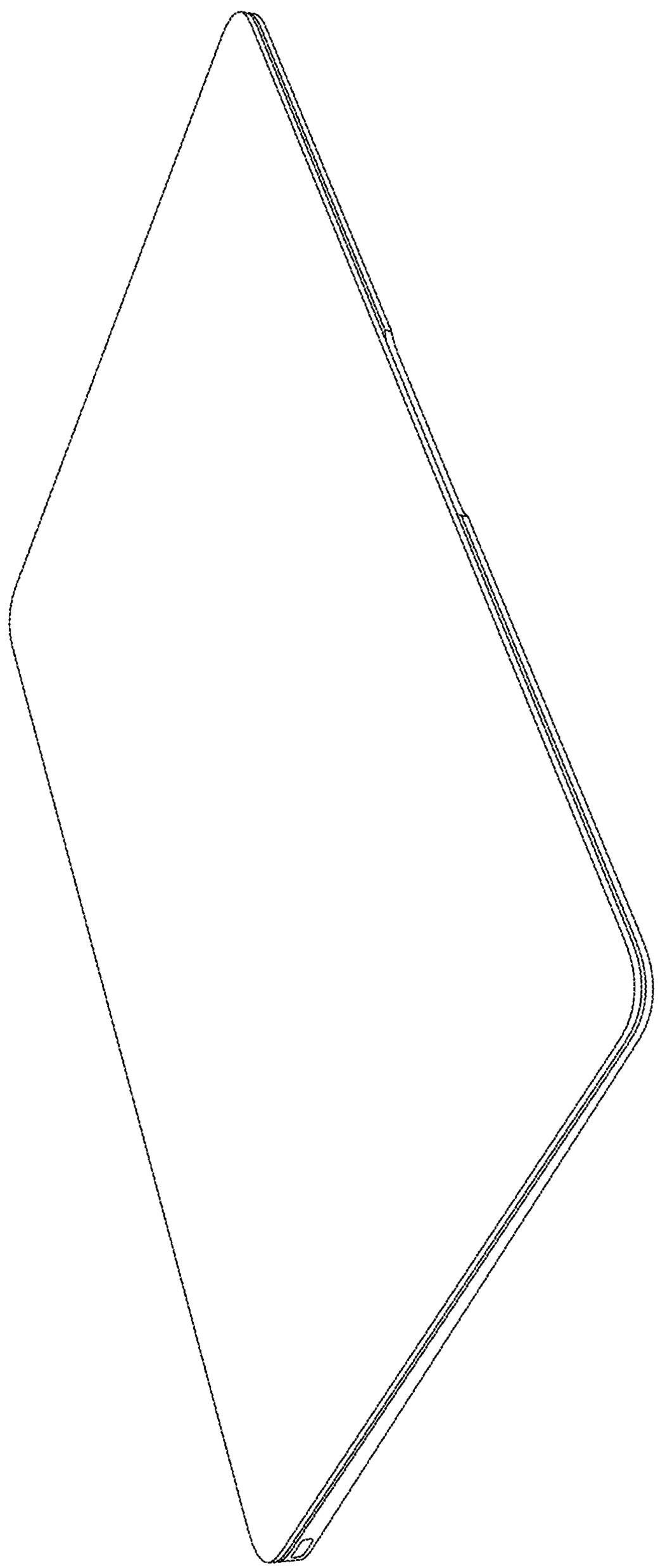

Fig. 1

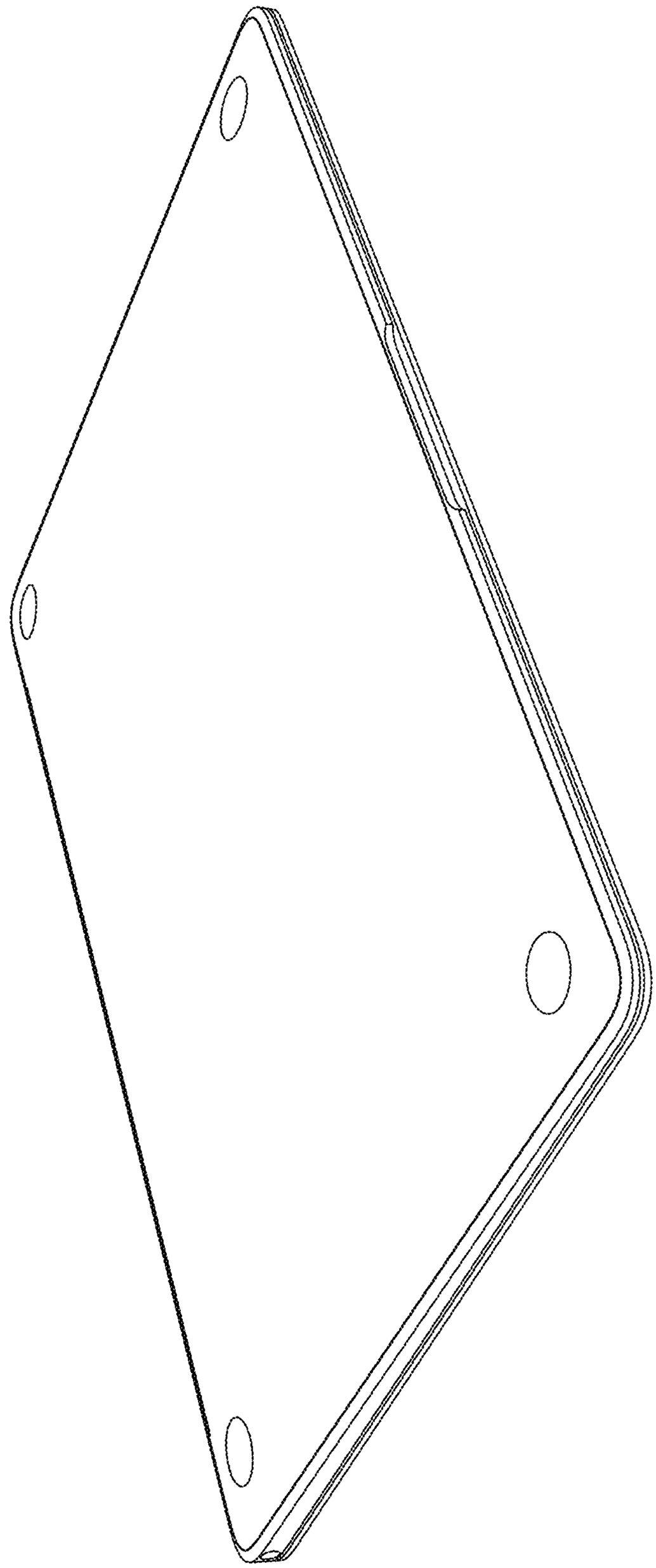

Fig. 2

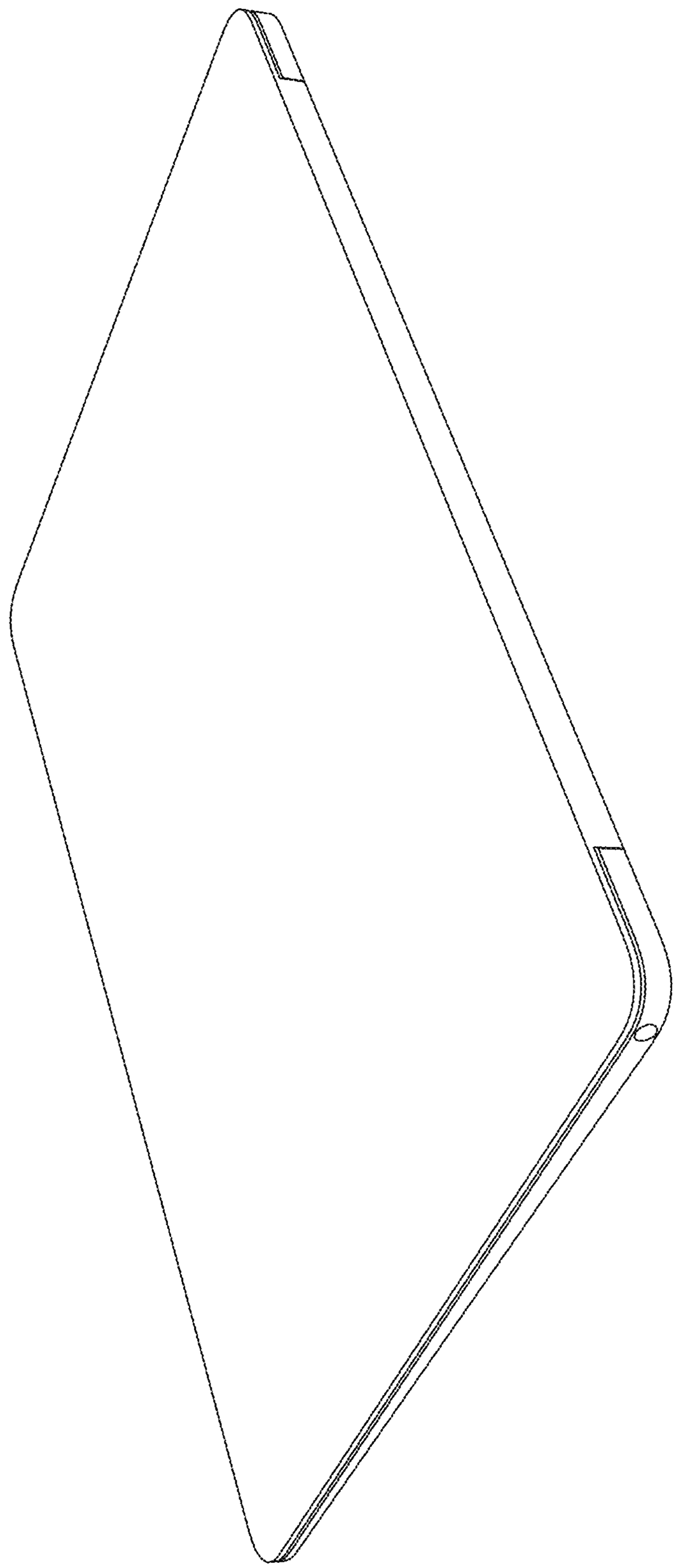

Fig. 3

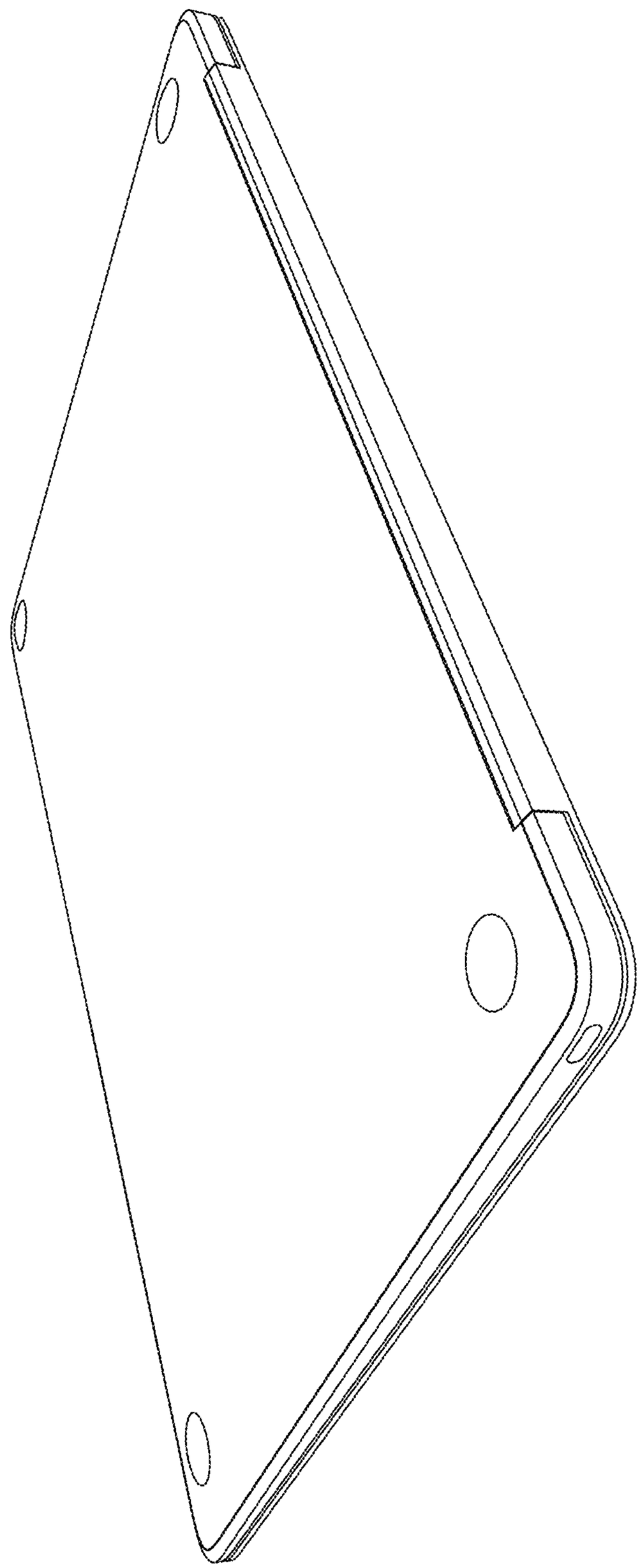

Fig. 4

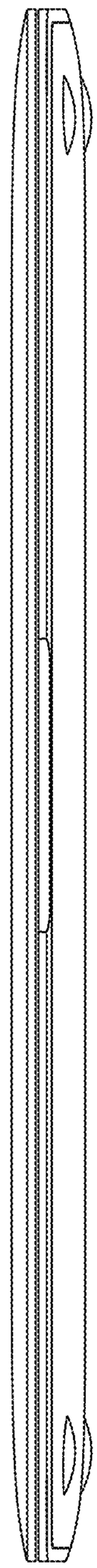

Fig. 5

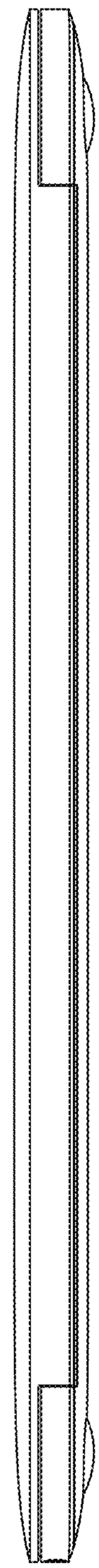

Fig. 6

Fig. 7

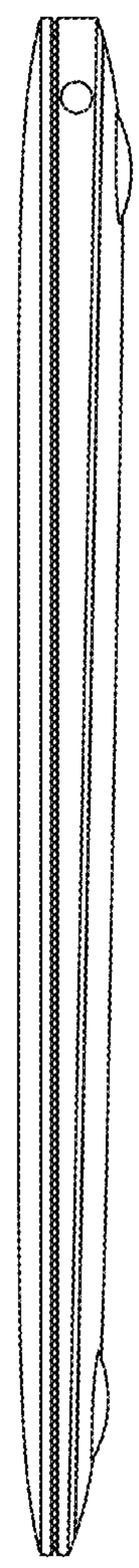

Fig. 8

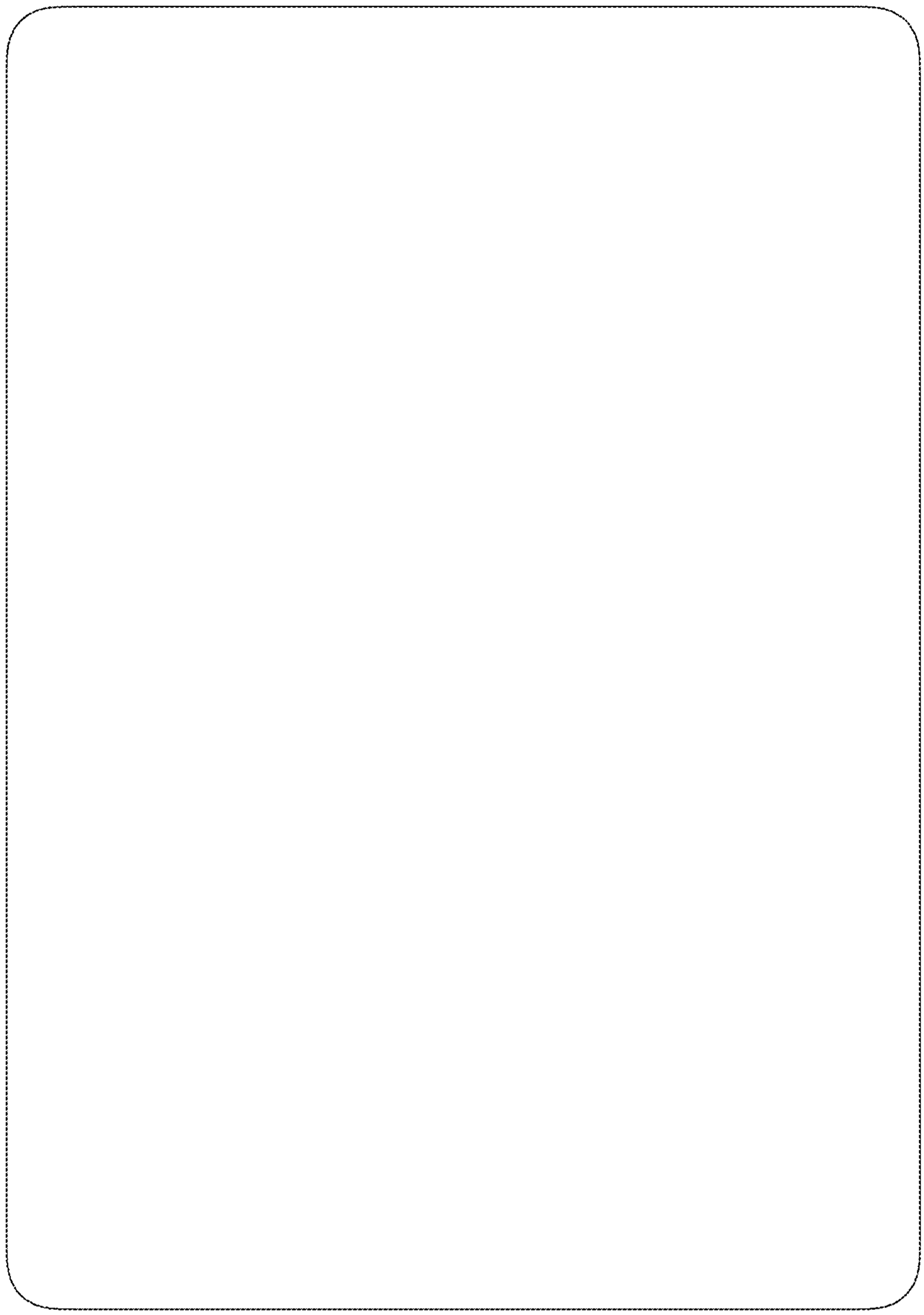

Fig. 9

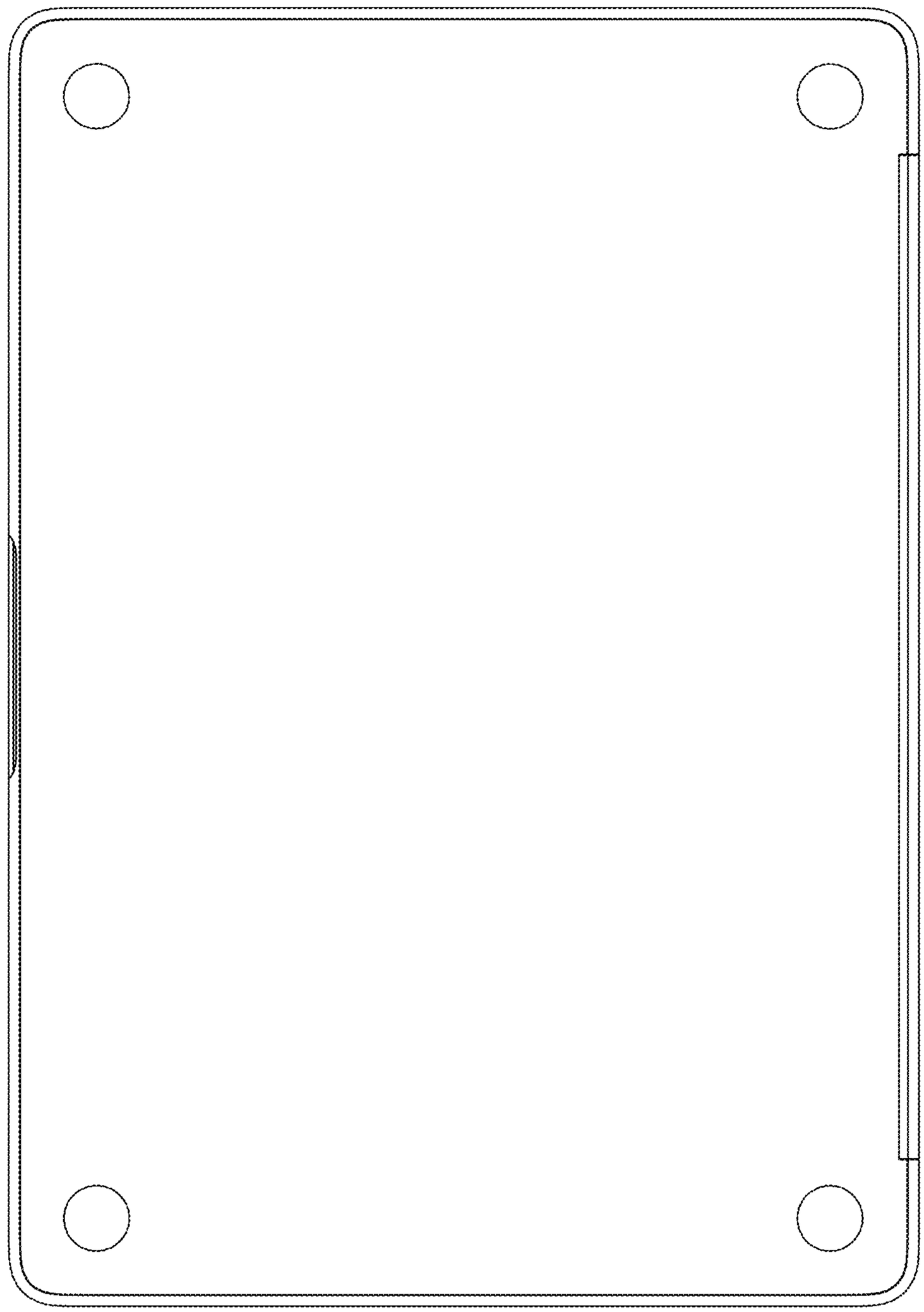

Fig. 10

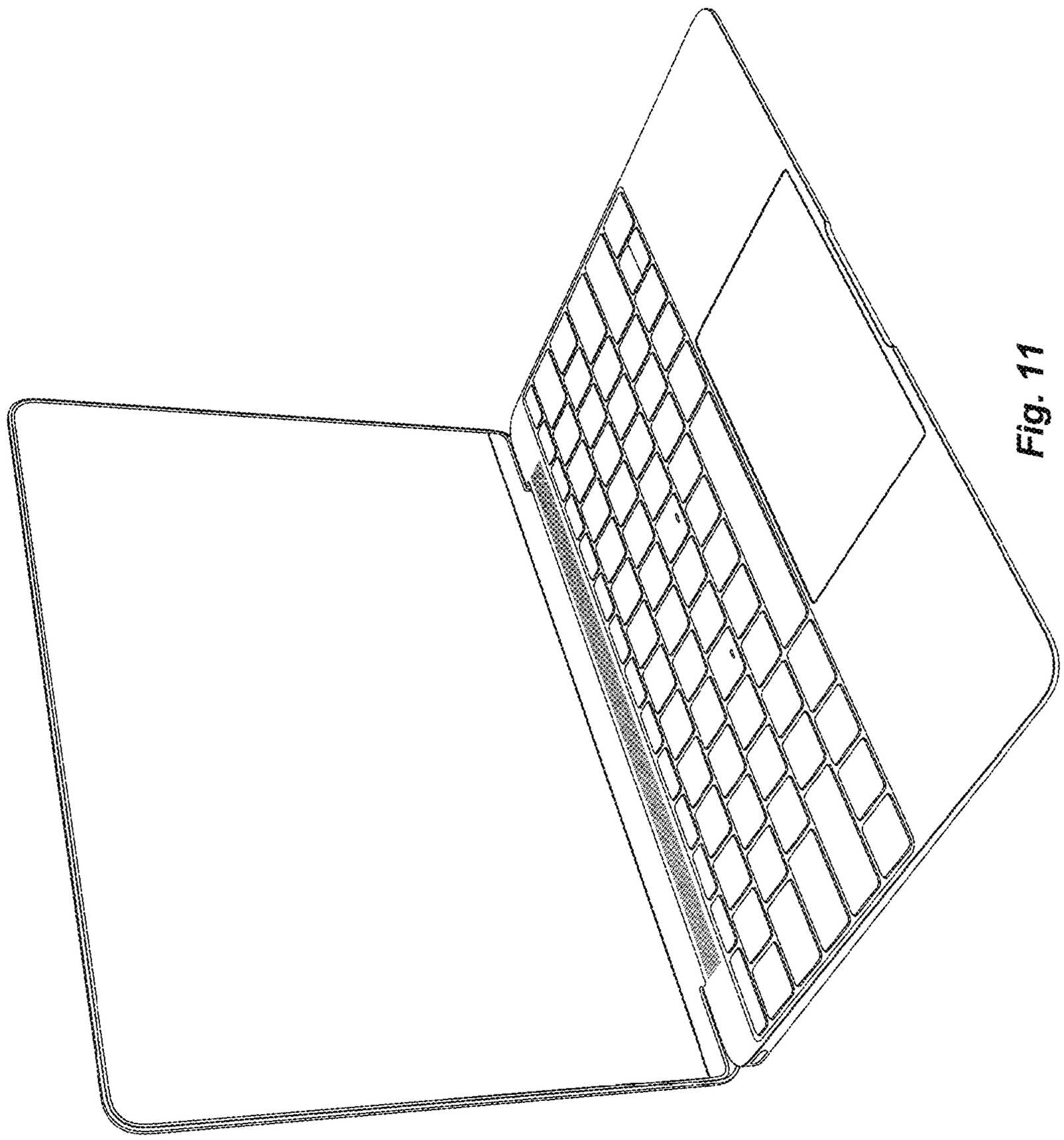

Fig. 11

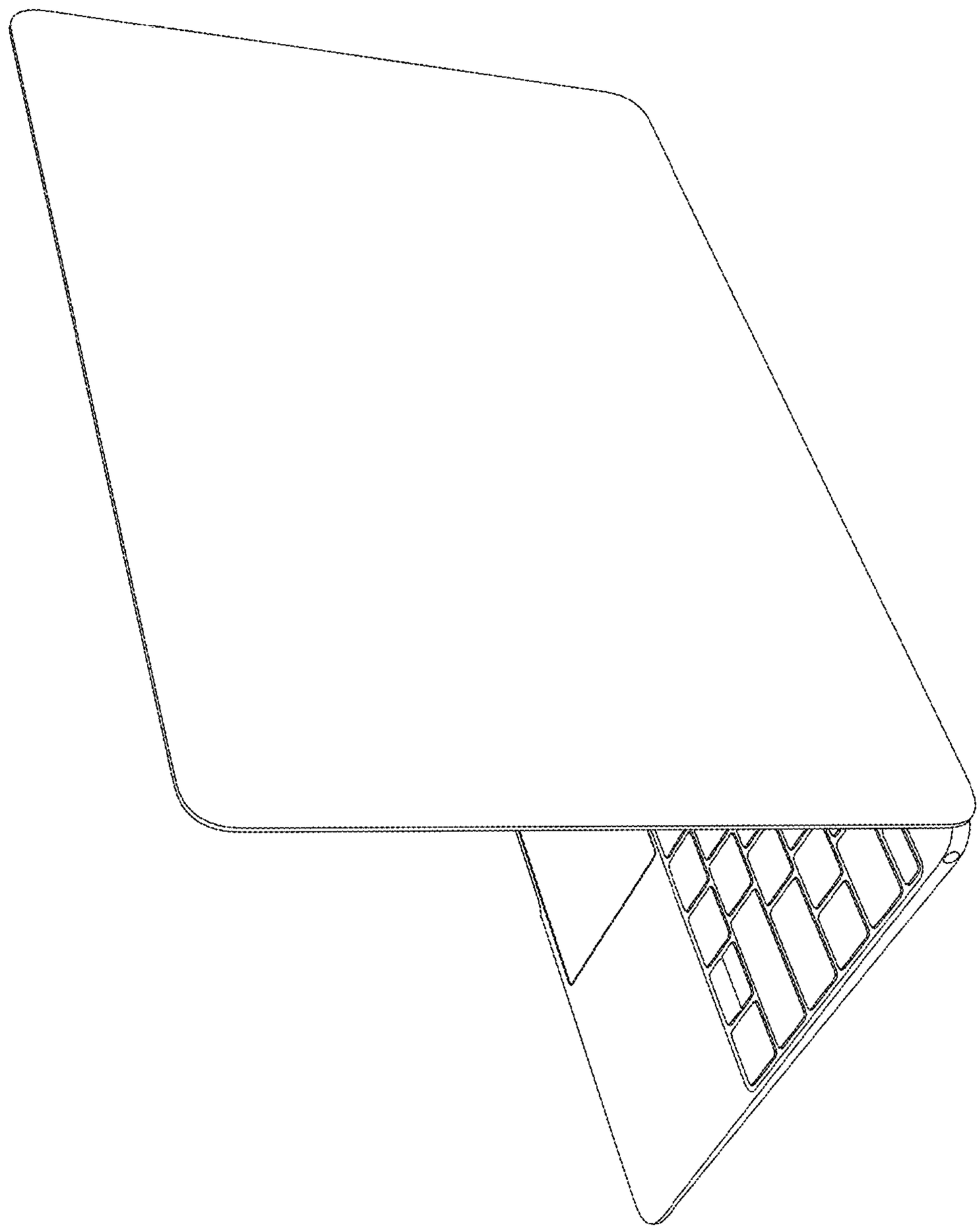

Fig. 12

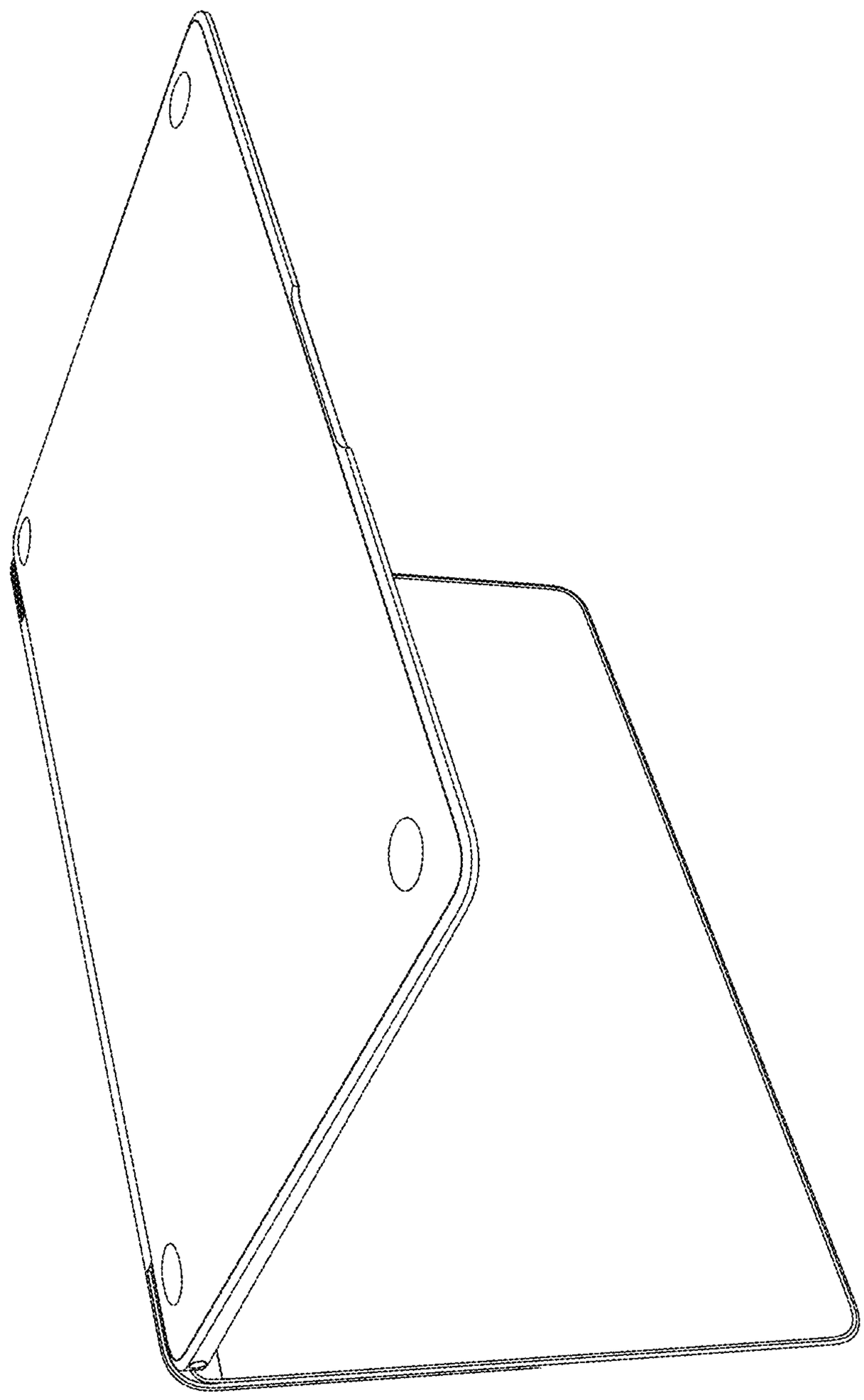

Fig. 13

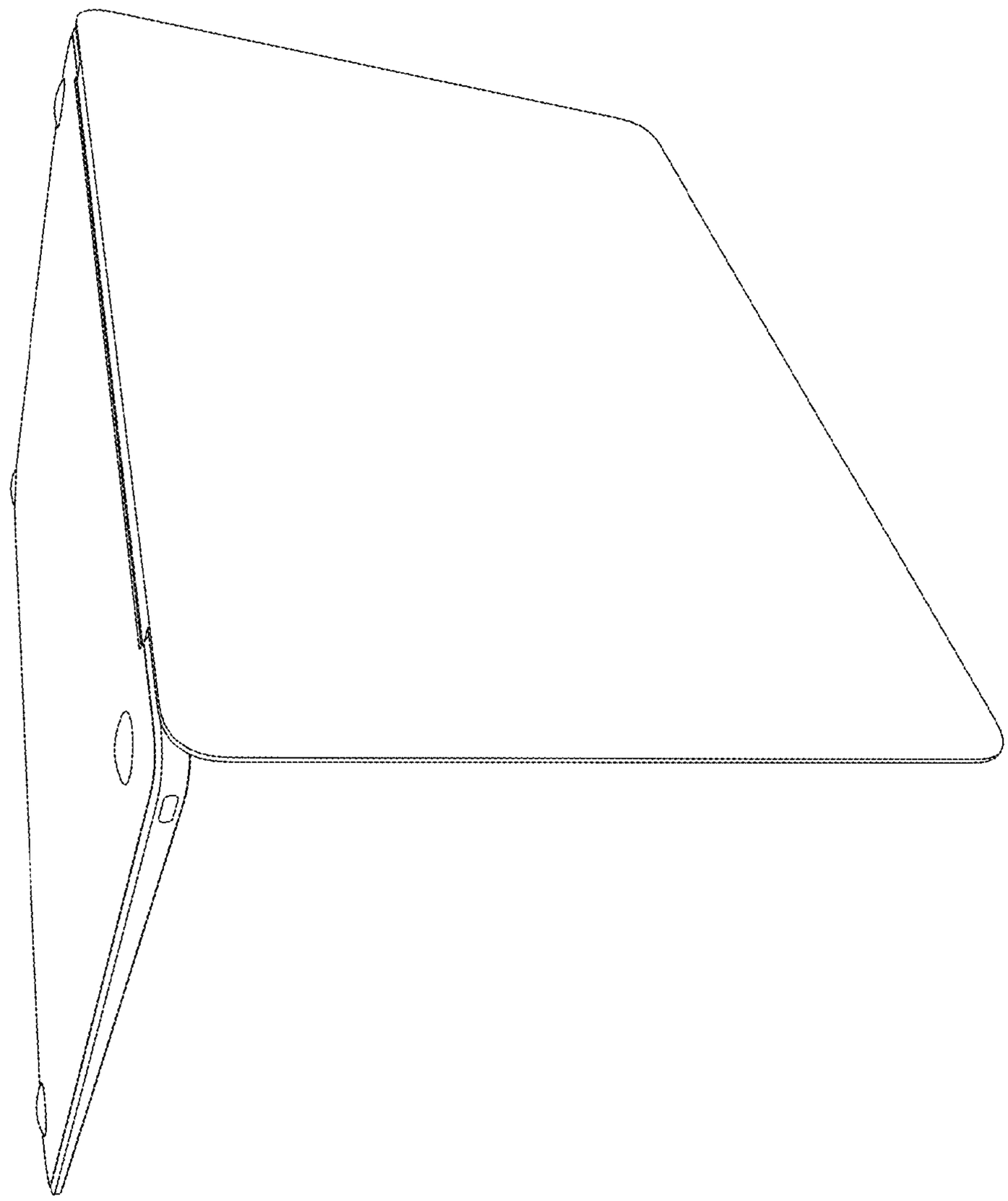

Fig. 14

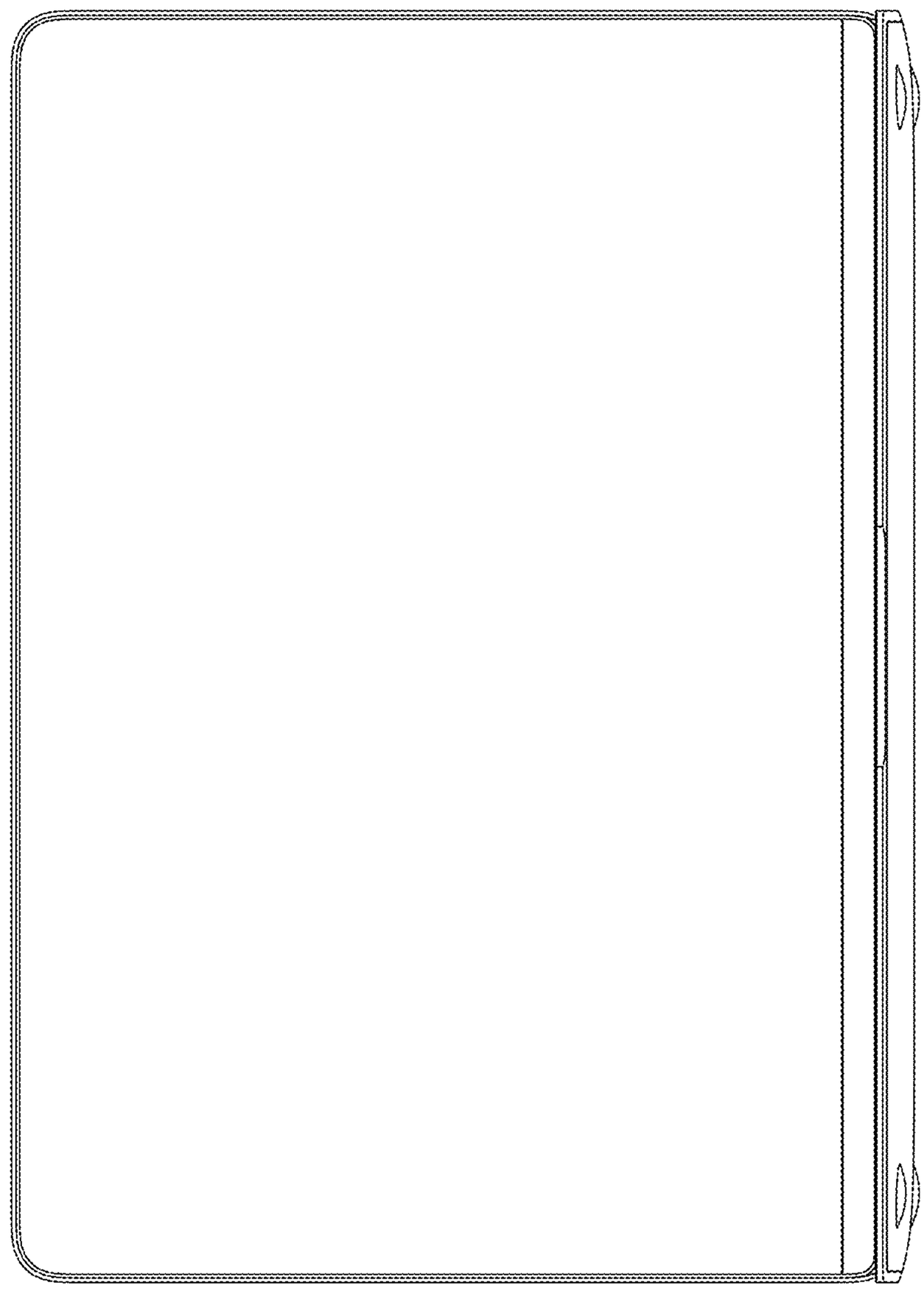

Fig. 15

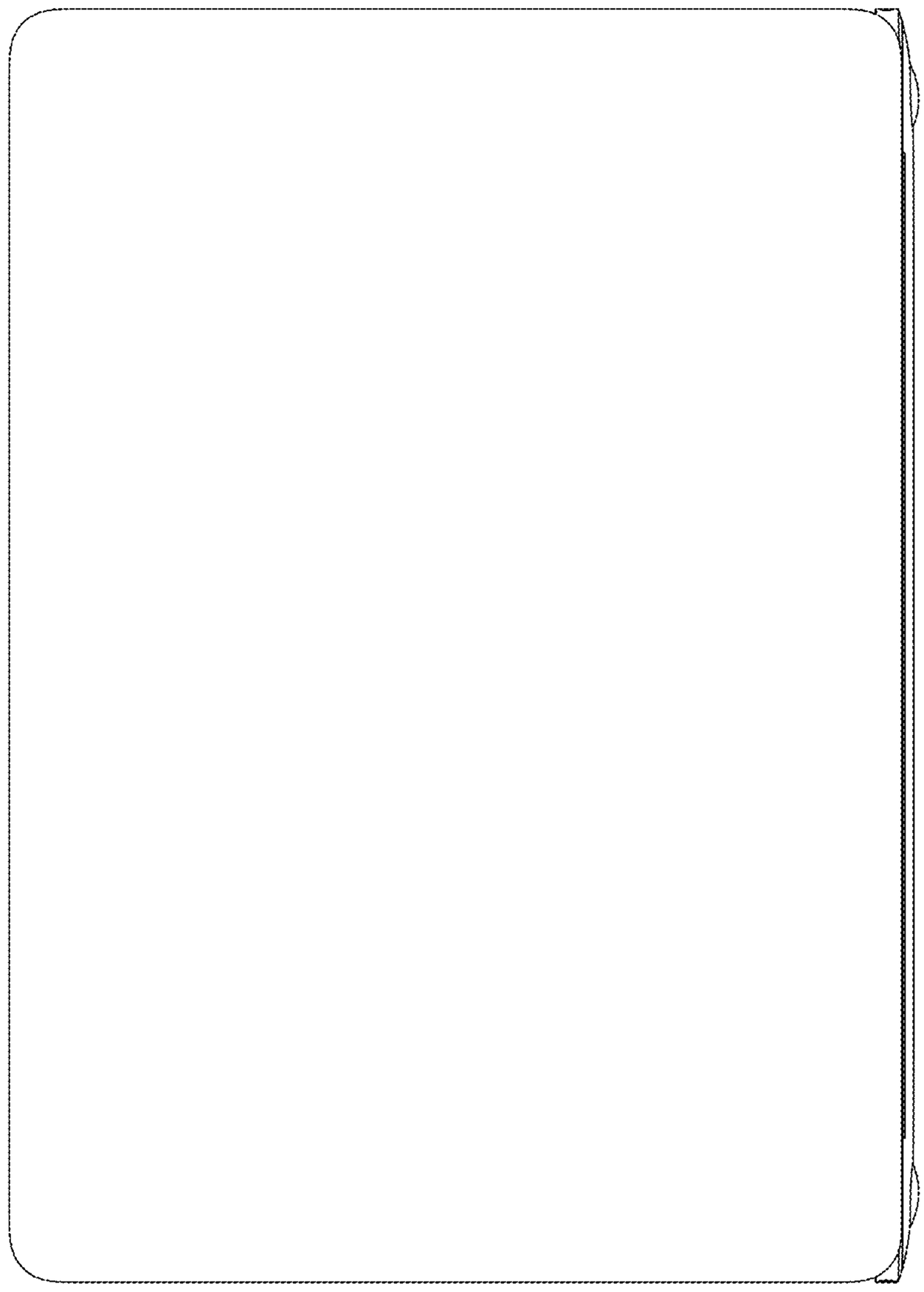

Fig. 16

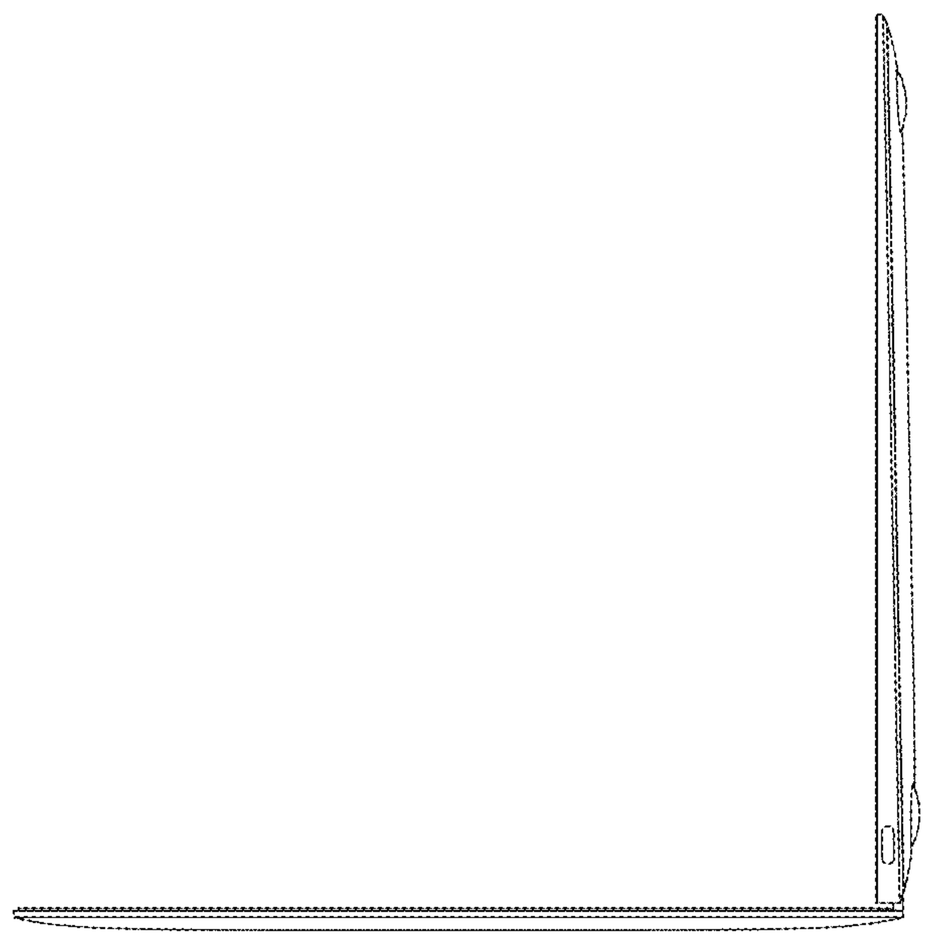

Fig. 17

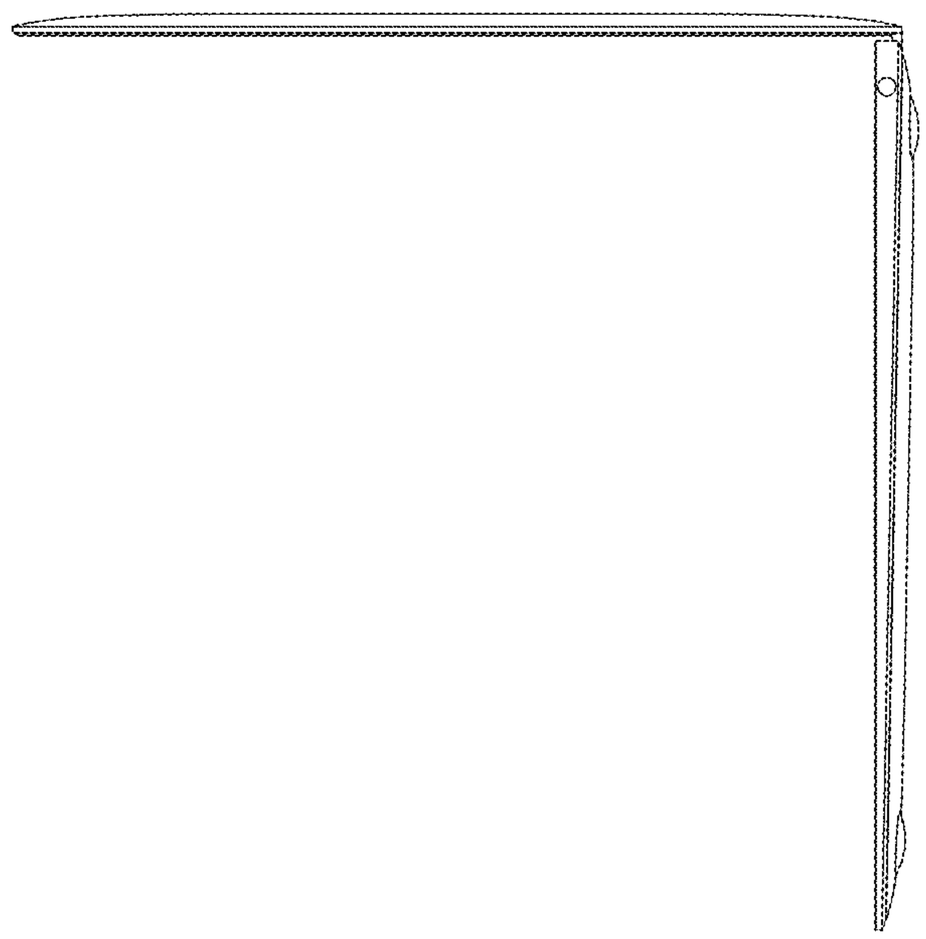

Fig. 18

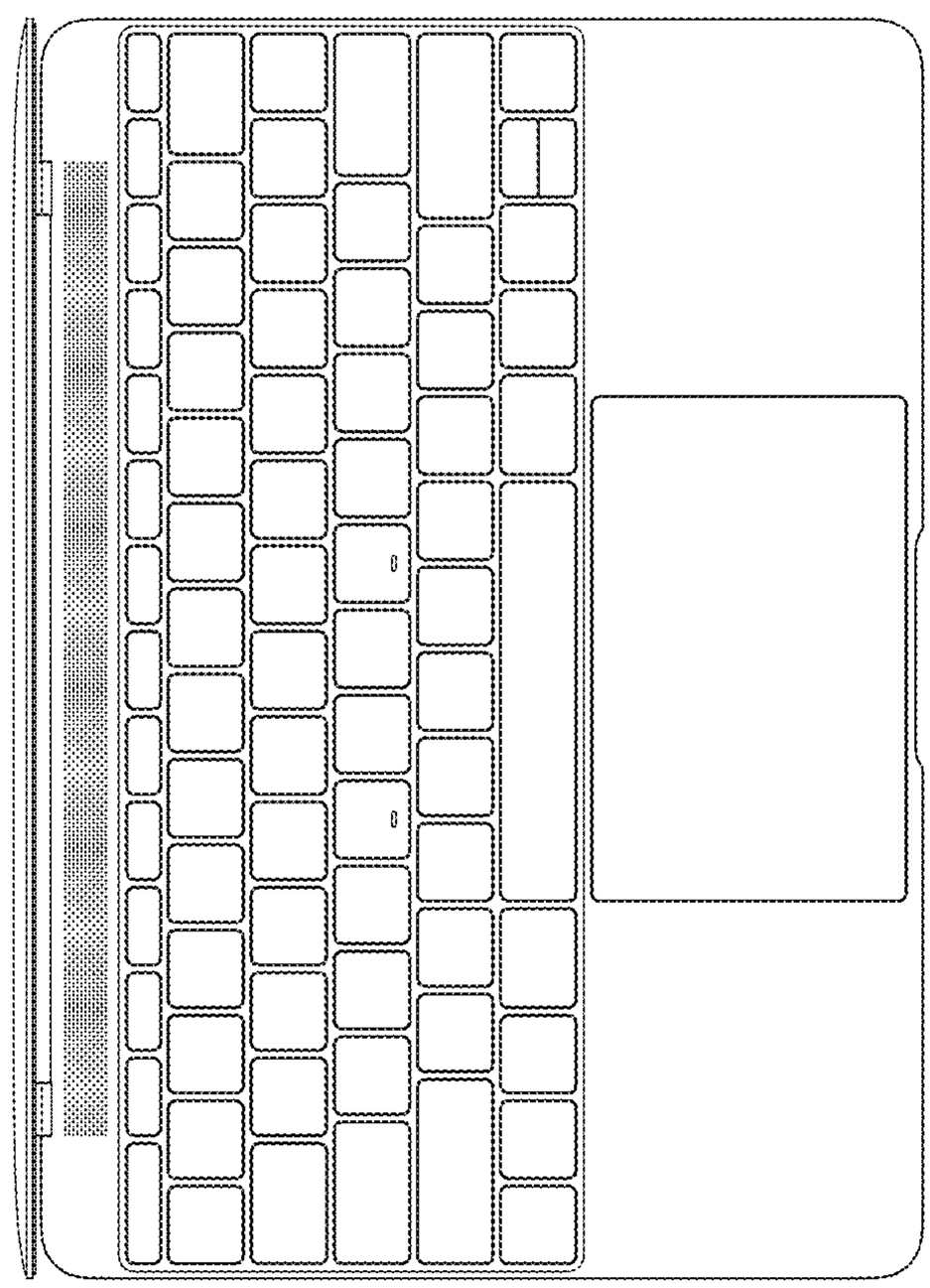

Fig. 19

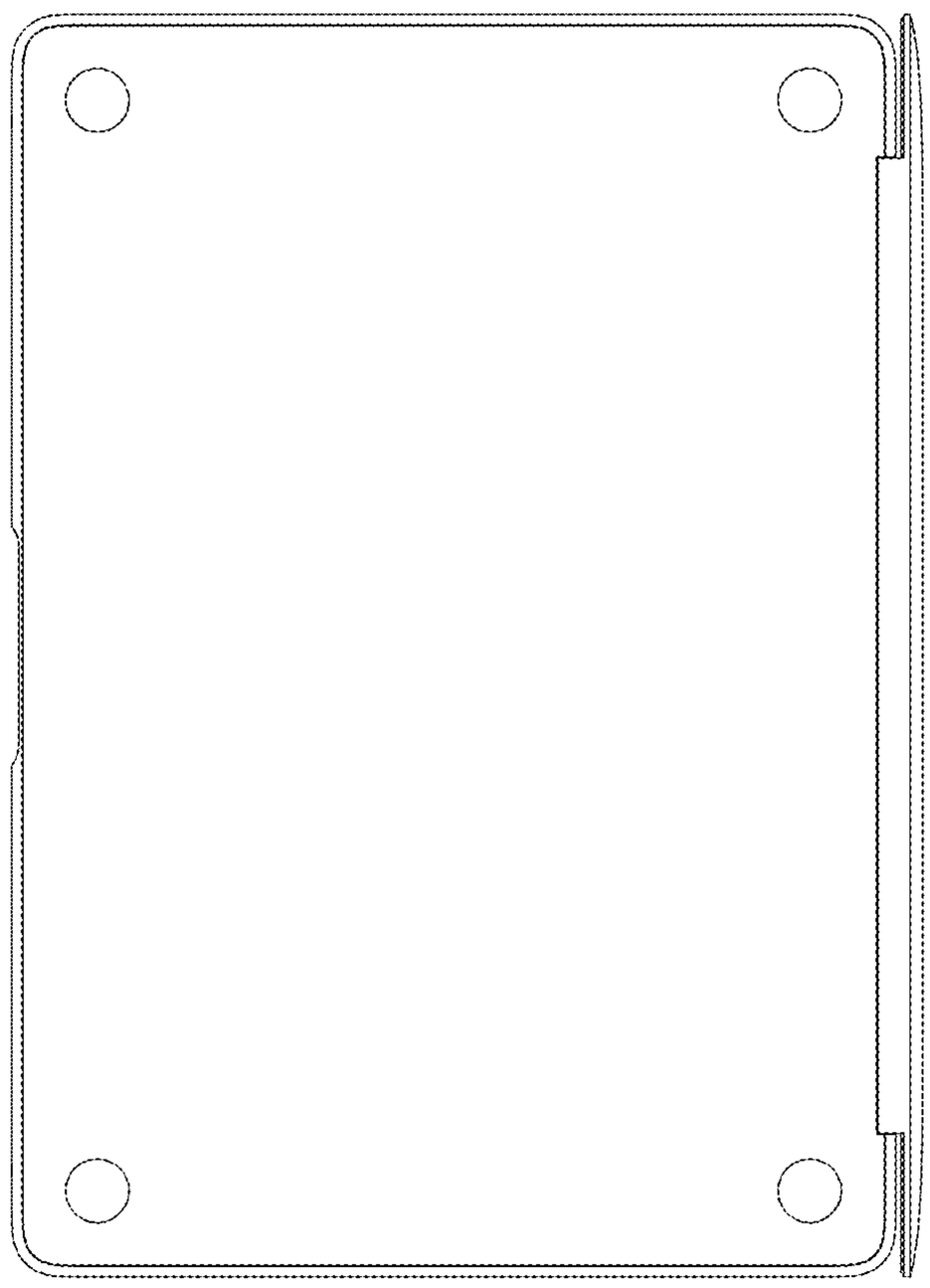

Fig. 20