US00D773658S

# (12) United States Design Patent
Bow

(10) Patent No.: US D773,658 S
(45) Date of Patent: ** Dec. 6, 2016

(54) **CONNECTOR**

(71) Applicant: **Medline Industries Inc.**, Mundelein, IL (US)

(72) Inventor: **Clark F. Bow**, Dandridge, TN (US)

(73) Assignee: **Medline Industries, Inc.**, Mundelein, IL (US)

(**) Term: **14 Years**

(21) Appl. No.: **29/491,226**

(22) Filed: **May 19, 2014**

**Related U.S. Application Data**

(63) Continuation of application No. 29/402,950, filed on Sep. 29, 2011.

(51) **LOC (10) Cl.** ..... **24-02**

(52) **U.S. Cl.**
USPC ..... **D24/129**

(58) **Field of Classification Search**
USPC D24/129, 112–114, 133, 130, 127; 606/181, 185; 604/164.01–164.09, 533, 604/232, 187, 168.01, 192, 19, 48, 93.01, 264, 604/523, 524, 526, 123; 600/101, 139, 143; 128/200.24, 207.14, 207.15; D23/262, 260, D23/259, 263; 137/614.03; 141/346–351, 384
CPC ..... A61M 25/00; A61M 39/00; A61M 27/00; A61M 25/0043; A61M 25/0067; A61M 25/0097; A61F 2/958
See application file for complete search history.

(56) **References Cited**

U.S. PATENT DOCUMENTS

D260,810 S 9/1981 Cleveland
D315,788 S 3/1991 Towsley
5,095,962 A 3/1992 Lloyd-Davies
D379,492 S 5/1997 Walker
D387,147 S * 12/1997 Vandermast ..... D23/262
5,983,964 A 11/1999 Zielinksi
D453,817 S 2/2002 Patteson
(Continued)

OTHER PUBLICATIONS

"24-Hour Suction Systems with CHG and Thumb Port Tool," Sage Products Inc., http://www.sageproducts.com/products/oral-hygiene/qcarewchg.cfm, product presently believed to have been publicly available since at least before Sep. 29, 2011; 5 pages.
(Continued)

*Primary Examiner* — David Muller
(74) *Attorney, Agent, or Firm* — Fitch, Even, Tabin & Flannery LLP

(57) **CLAIM**

I claim the ornamental design for a connector, as shown and described.

**DESCRIPTION**

FIG. **1** is a first perspective view of a connector in a first position;
FIG. **2** is a second perspective view thereof;
FIG. **3** is a front elevation view thereof;
FIG. **4** is a rear elevation view thereof;
FIG. **5** is a right side elevation view thereof;
FIG. **6** is a left side elevation view thereof;
FIG. **7** is a top plan view thereof;
FIG. **8** is a bottom plan view thereof;
FIG. **9** is a first perspective view of the connector of FIG. **1** in a second position;
FIG. **10** is a second perspective view thereof;
FIG. **11** is a front elevation view thereof;
FIG. **12** is a rear elevation view thereof;
FIG. **13** is a right side elevation view thereof;
FIG. **14** is a left side elevation view thereof;
FIG. **15** is a top plan view thereof; and,
FIG. **16** is a bottom plan view thereof.
(Continued)

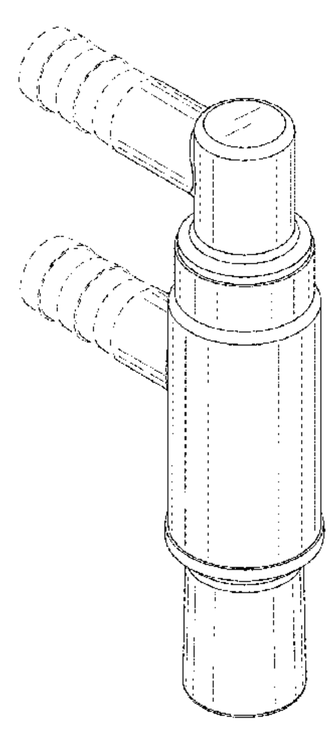

The broken lines depict unclaimed environmental subject matter and form no part of the claimed design.

**1 Claim, 8 Drawing Sheets**

(56) **References Cited**

U.S. PATENT DOCUMENTS

| | | | | | |
|---|---|---|---|---|---|
| 6,893,000 | B2 | | 5/2005 | Rutter | |
| D508,111 | S | * | 8/2005 | Karasawa | D23/213 |
| D607,090 | S | | 12/2009 | Johnson | |
| D614,737 | S | | 4/2010 | Lass | |
| D617,880 | S | | 6/2010 | Johnson | |
| D651,695 | S | | 1/2012 | Johnson | |
| D652,121 | S | * | 1/2012 | Bonhag | D23/263 |
| D654,150 | S | * | 2/2012 | Bonhag | D23/259 |
| D661,786 | S | | 6/2012 | Johnson | |
| D675,299 | S | | 1/2013 | McKenzie | |
| D707,355 | S | | 6/2014 | Bow | |
| 8,898,876 | B2 | * | 12/2014 | Feith | B25B 27/10 29/270 |
| 8,950,789 | B2 | * | 2/2015 | Jahan | B05B 1/044 239/207 |
| D733,265 | S | * | 6/2015 | Eriksen | D23/262 |
| D733,842 | S | * | 7/2015 | Allred | D23/259 |
| D736,899 | S | * | 8/2015 | Courtois | D23/263 |
| D743,511 | S | * | 11/2015 | Bednarz | D23/263 |
| D748,761 | S | * | 2/2016 | Blank | D23/259 |
| D750,744 | S | * | 3/2016 | Liljeqvist | D23/233 |

OTHER PUBLICATIONS

"Kimvent*Oral Care Kit, Suction Value, Connection Tubing, Clamp, "Y" Connector, Oral Suction Probes," Kimberly-Clark, http://www.kchealthcare.com/us/healthcare/home/products/product-catalog/respi/wi0-oral/xr6xo0-himbe/121-kimve.aspx, product presently believed to have been publicly available since at least before Sep. 29, 2011; 2 pages.

"Medline's VAPrevent & Oral Care Kits; Reducting the Rist of Ventilator-Associated Pneumonia," Medline, http://www.bettymills.com/product/more_infor/LIT540-MKT208096.pdf, product presently believed to have been publicly available since at least before Sep. 29, 2011; 2 pages.

Chinese Design Patent Application No. 201230080279.0; Office Action dated Jun. 13, 2012; 1 page.

Photograph of product sold by Sage Products Inc.; product presently believed to have been publicly available since at least before Sep. 29, 2011; 1 page.

Photographs of "Y" connector sold by Kimberly-Clark; product presently believed to have been publicly available since at least before Sep. 29, 2011; 2 pages.

Photograph of connector sold by Medline; product presently believed to have been publicly available since at least before Sep. 29, 2011; 1 page.

* cited by examiner

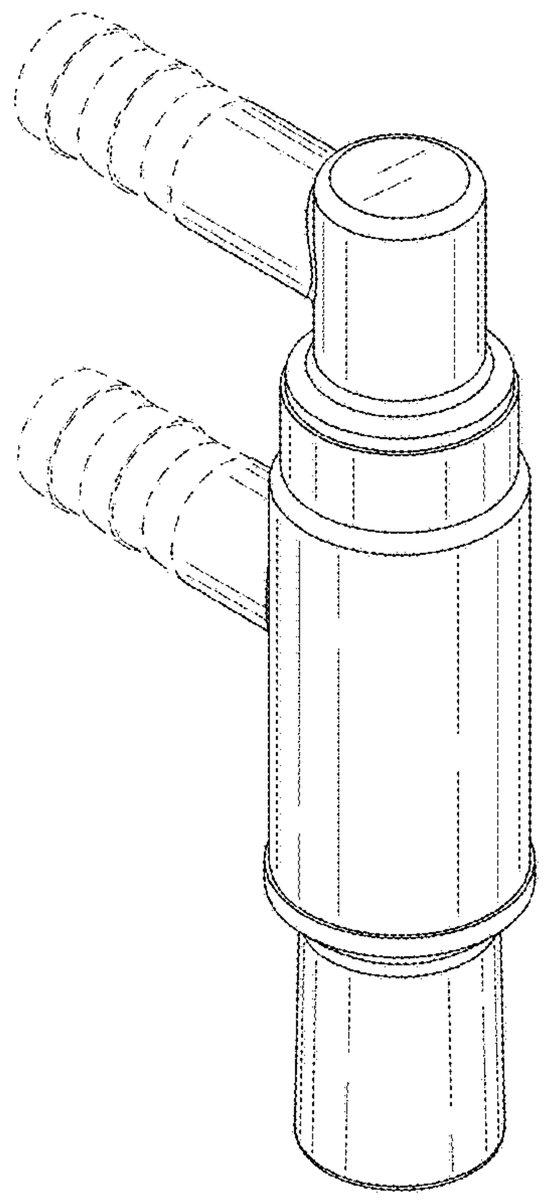

FIG. 1

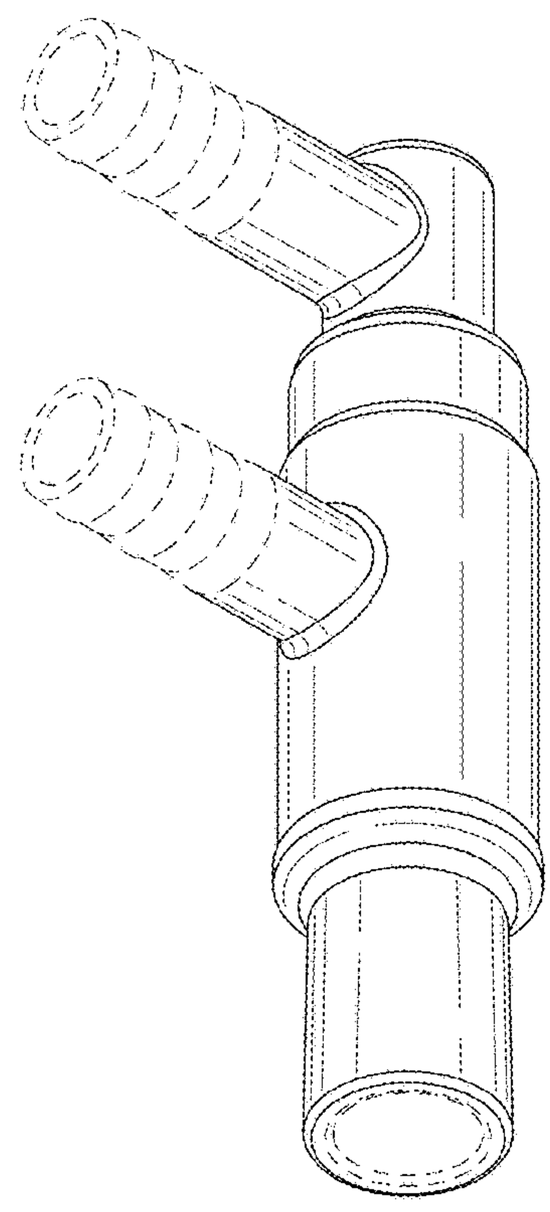

FIG. 2

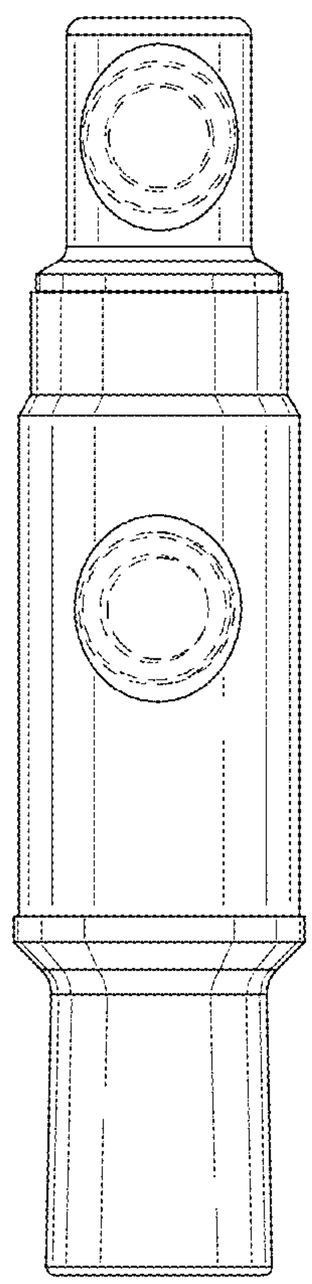

FIG. 3

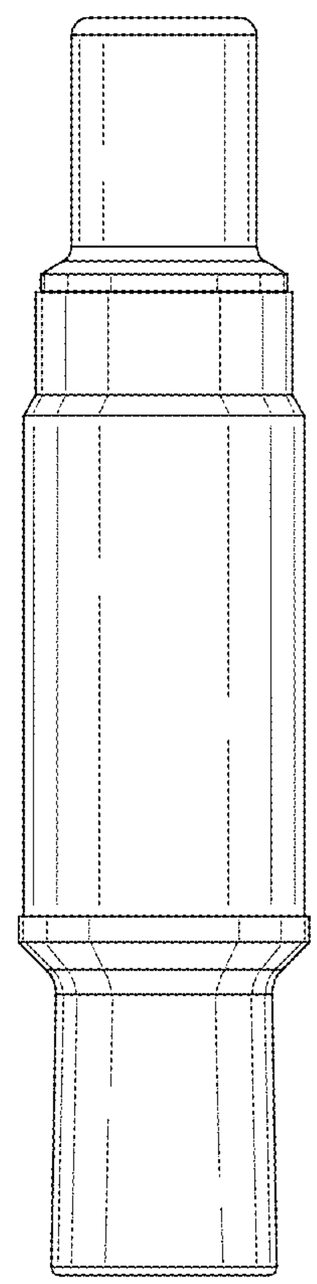

FIG. 4

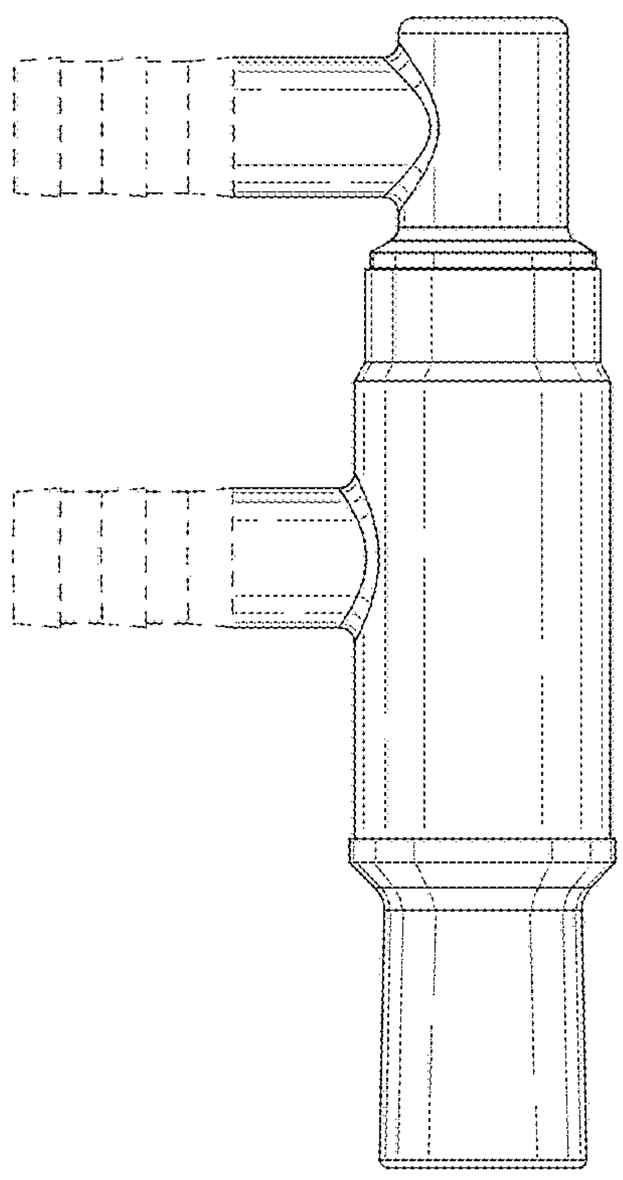

FIG. 5

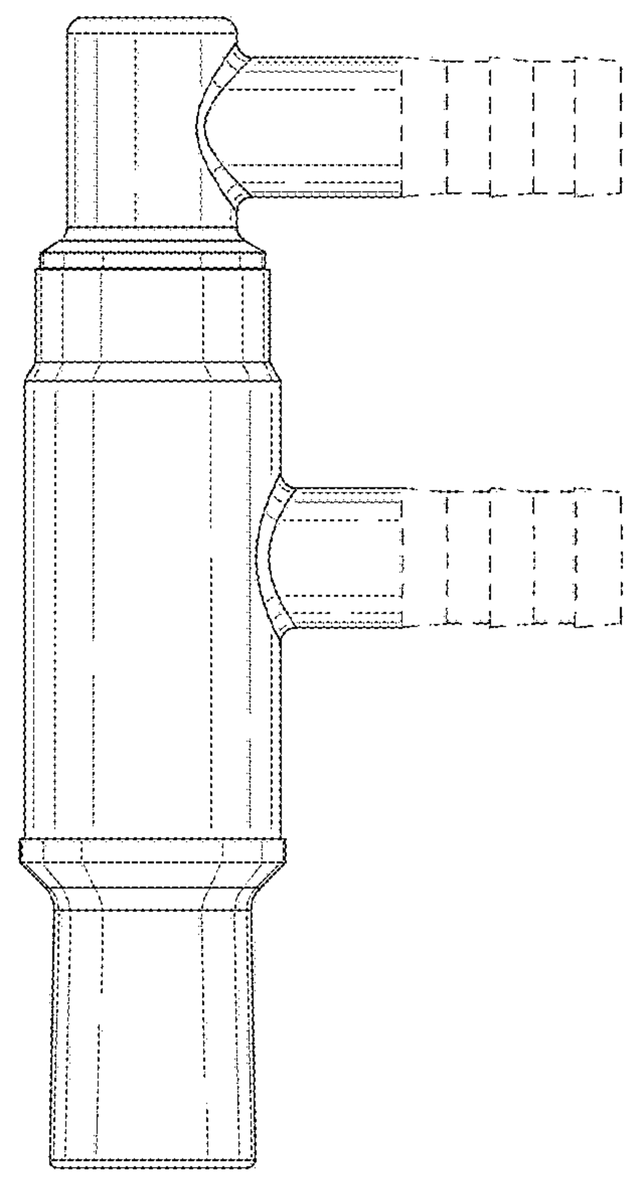

FIG. 6

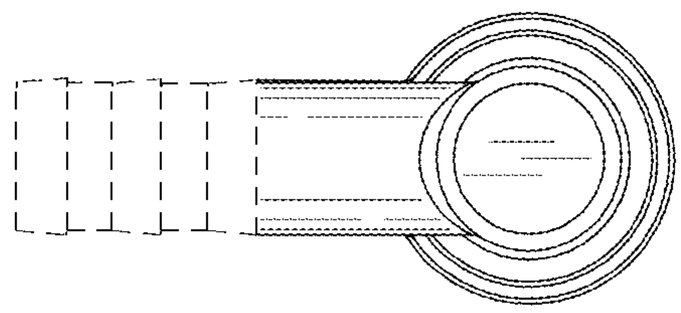

FIG. 7

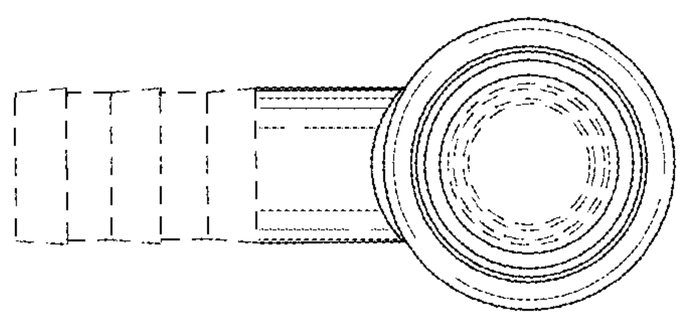

FIG. 8

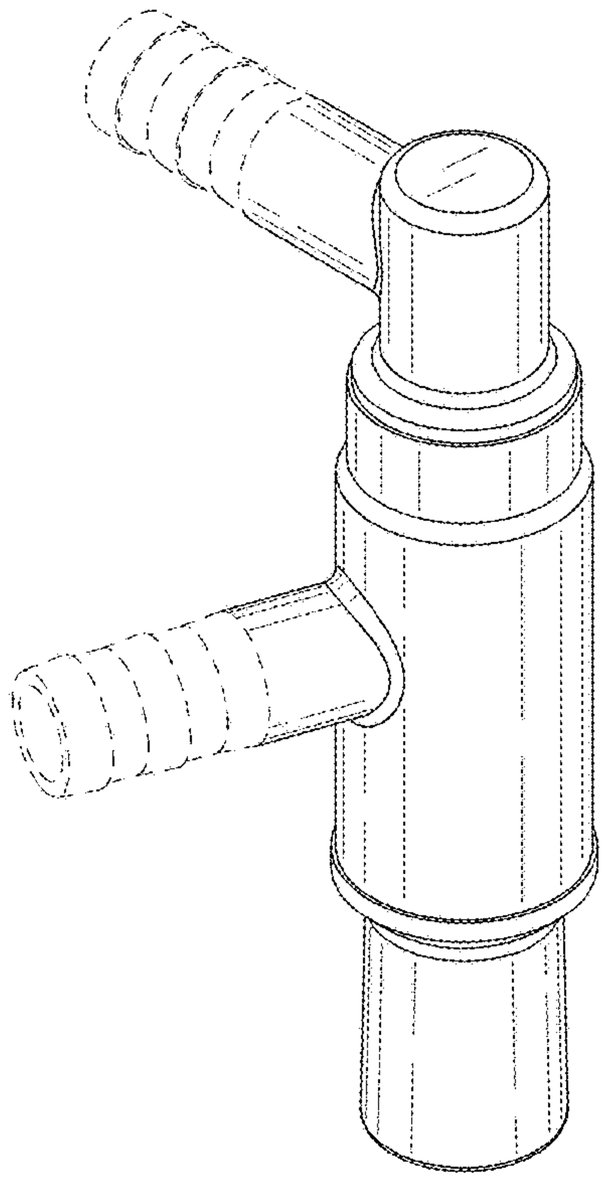

FIG. 9

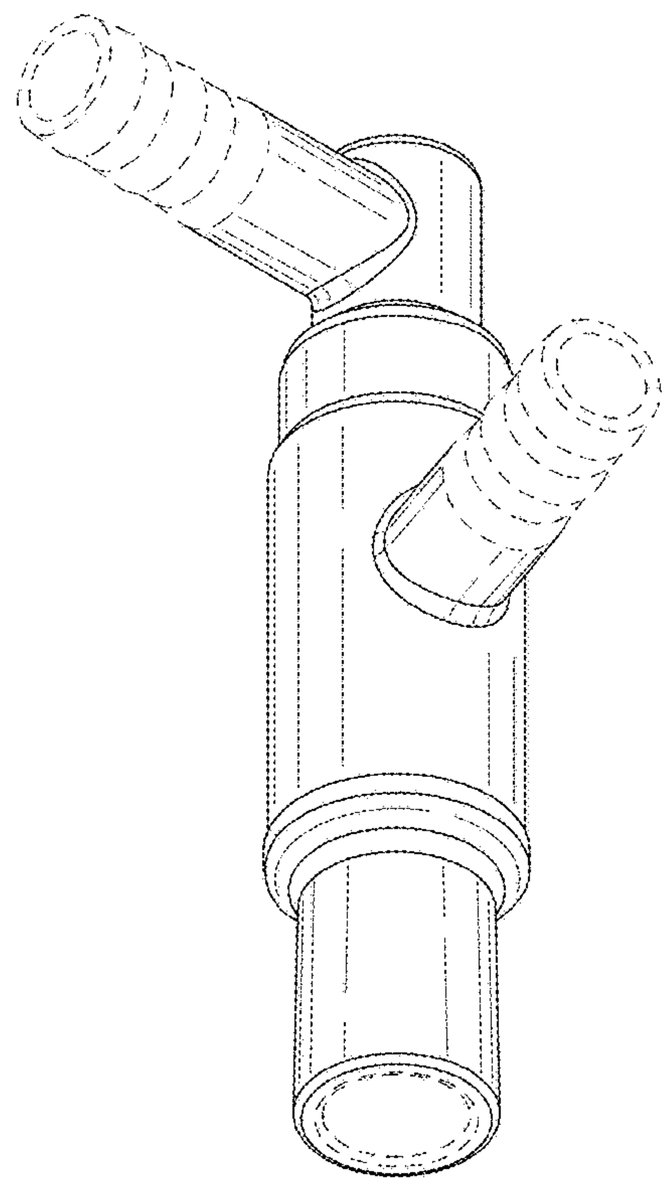

FIG. 10

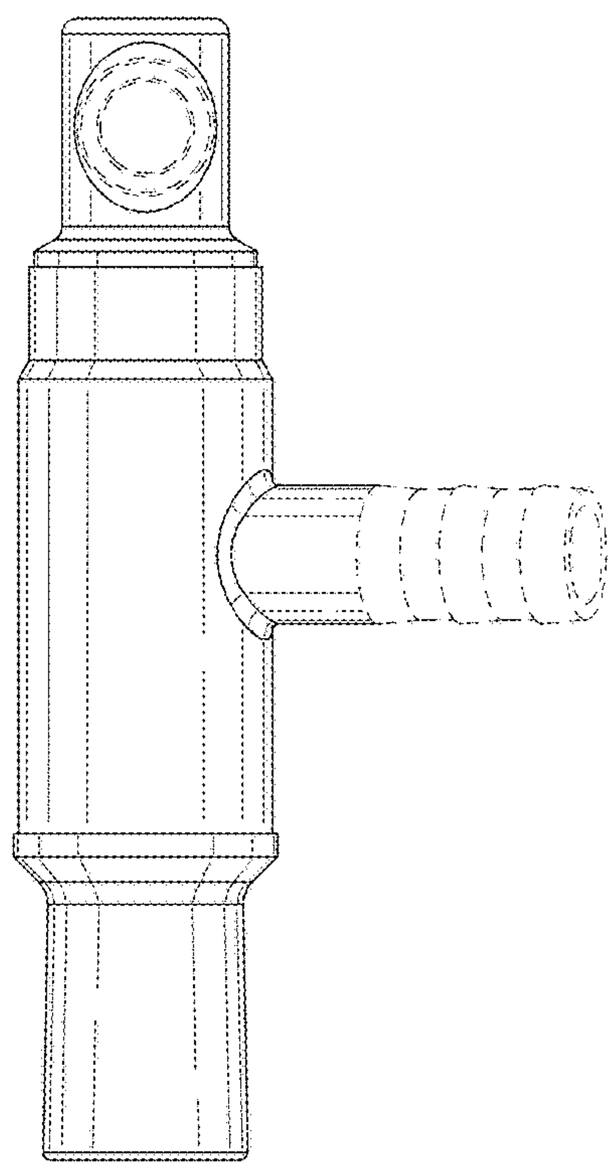

FIG. 11

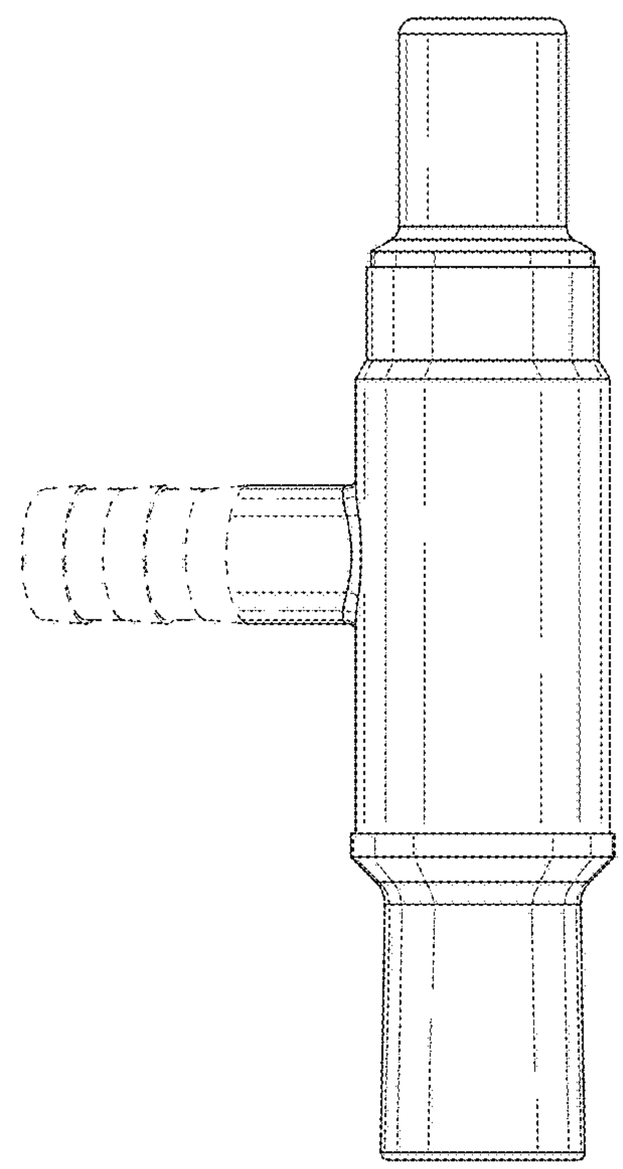

FIG. 12

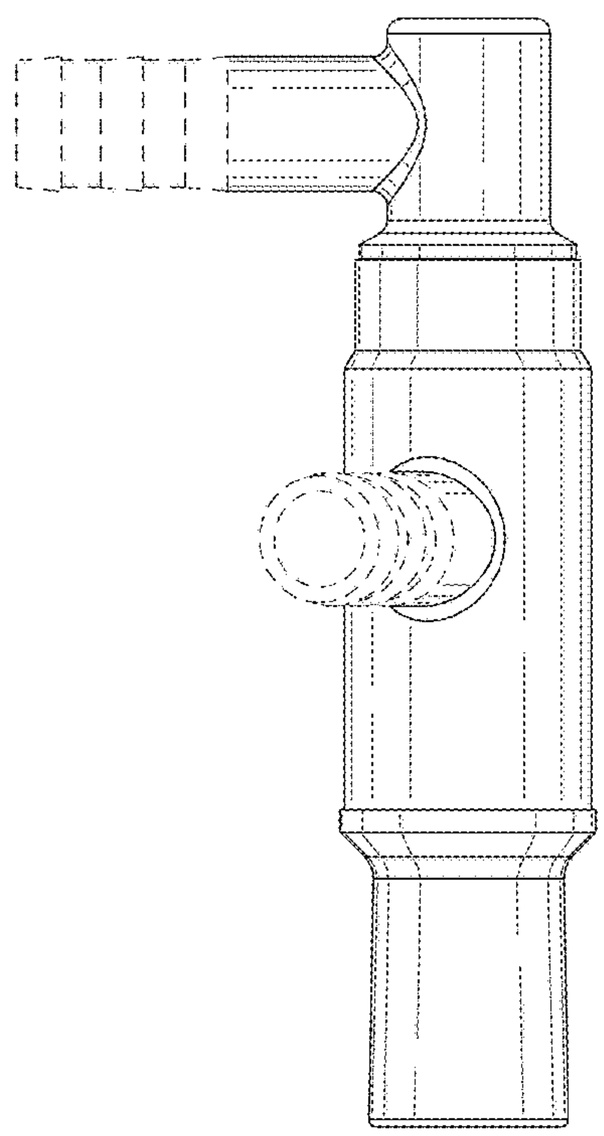

FIG. 13

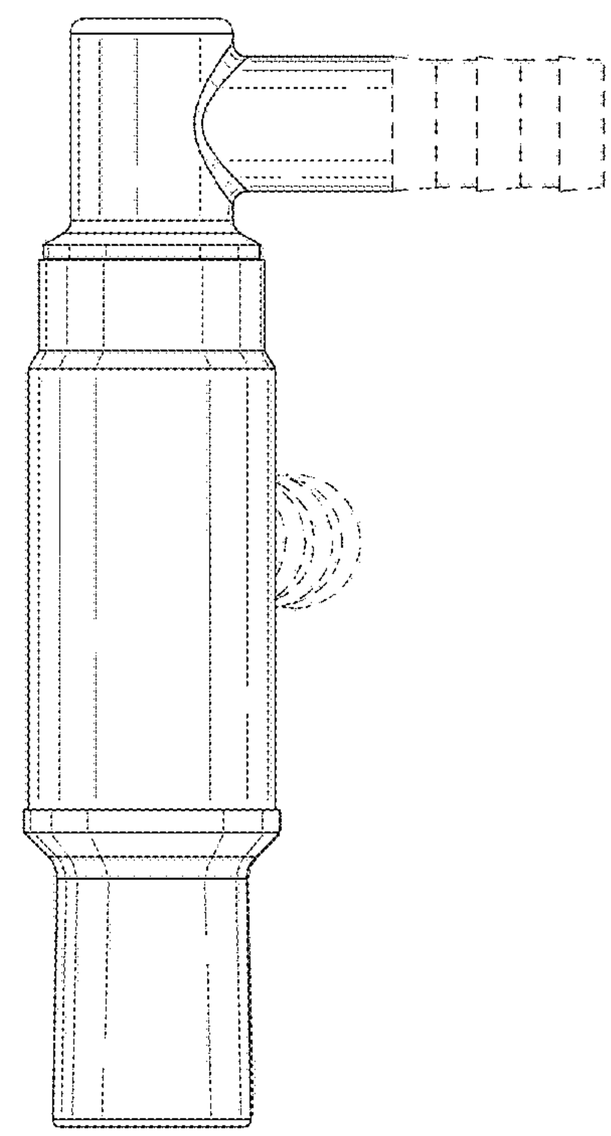

FIG. 14

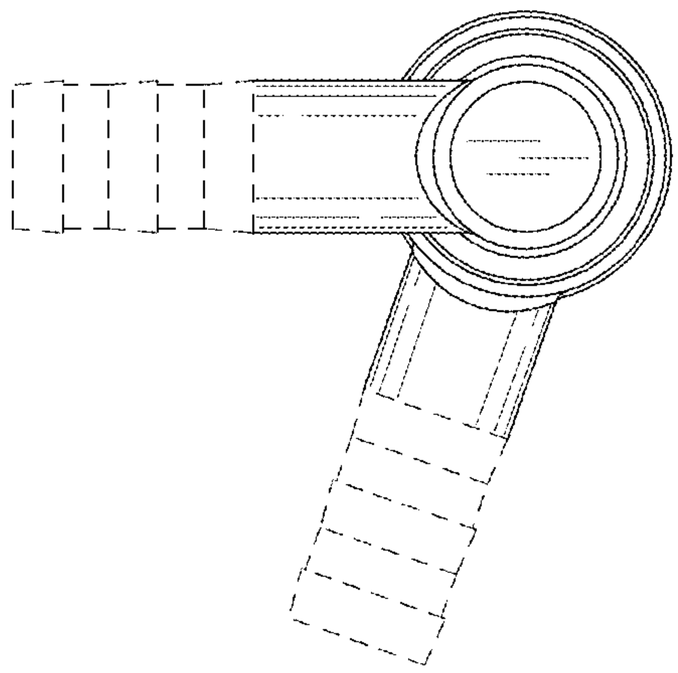

FIG. 15

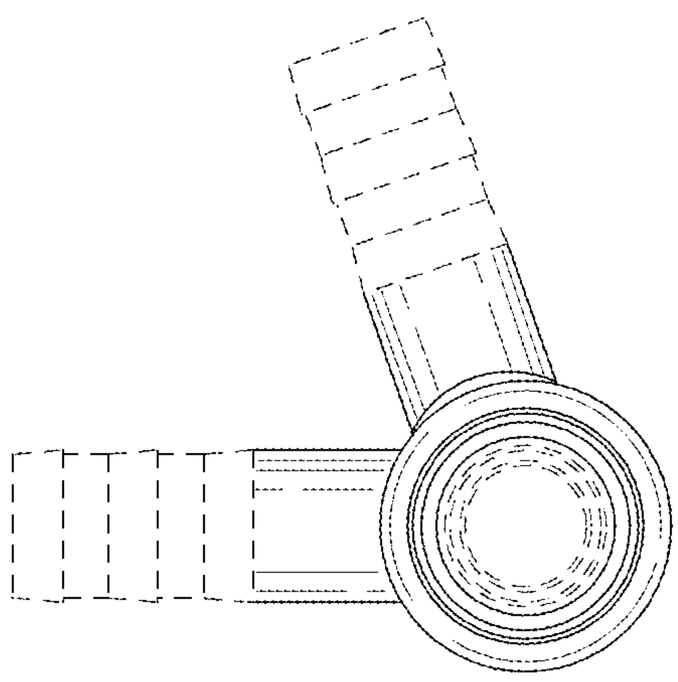

FIG. 16