US00D773233S

(12) United States Design Patent

Suh et al.

(10) Patent No.: US D773,233 S
(45) Date of Patent: ** Dec. 6, 2016

(54) **MICROWAVE**

(71) Applicant: **Samsung Electronics Co., Ltd.**, Suwon-si, Gyeonggi-do (KR)

(72) Inventors: **Seung-Wook Suh**, Goyang-si (KR); **Jae-Moon Lee**, Seoul (KR); **Binna Kim**, Seoul (KR); **Hyeong-Ju Seo**, Seoul (KR); **Woo-Joo Choi**, Anyang-si (KR); **Gi-Sung Han**, Seoul (KR)

(73) Assignee: **SAMSUNG ELECTRONICS CO., LTD.** (KR)

(**) Term: **14 Years**

(21) Appl. No.: **29/519,315**

(22) Filed: **Mar. 4, 2015**

(30) **Foreign Application Priority Data**

Sep. 4, 2014 (KR) 30-2014-0043380

(51) **LOC (10) Cl.** **07-02**

(52) **U.S. Cl.**
USPC **D7/351**

(58) **Field of Classification Search**
USPC D7/332–351, 362–367, 405; 219/756, 219/702; 426/234
CPC F24C 15/10; F24C 7/083; F24C 15/107; F24C 3/08–3/12; F24C 15/023; F24C 15/322; F24C 15/325; F24C 15/327; F24C 7/08; F24C 15/048; H05B 6/062; H05B 1/0266; H05B 6/763; H05B 6/6414; H05B 6/6417; F23D 14/06; F23D 2900/14062; F23D 14/105; F23D 14/045; A47J 37/0713
See application file for complete search history.

(56) **References Cited**

U.S. PATENT DOCUMENTS

D275,546	S		9/1984	Tanaka et al.	
D329,353	S		9/1992	Yamada	
D535,848	S	*	1/2007	Jeon	D7/351
D539,073	S		3/2007	Kanza	
D583,614	S	*	12/2008	Chung	D7/351
D586,619	S		2/2009	Pino et al.	
D673,418	S	*	1/2013	Lee	D7/351
D683,576	S	*	6/2013	Lee	D7/351
D704,983	S		5/2014	Yoon et al.	
D705,008	S	*	5/2014	Shin	D7/405
D707,074	S	*	6/2014	Shin	D7/351
D741,639	S	*	10/2015	Kim	D7/351
D741,649	S	*	10/2015	Kim	D7/405

* cited by examiner

Primary Examiner — Cynthia M Chin
(74) *Attorney, Agent, or Firm* — Cantor Colburn LLP

(57) **CLAIM**

The ornamental design for a microwave, as shown and described.

DESCRIPTION

FIG. **1** is a perspective view of a microwave, showing our new design;
FIG. **2** is a front view thereof;
FIG. **3** is a rear view thereof;
FIG. **4** is a side view thereof;
FIG. **5** is a another side view thereof;
FIG. **6** is a top view thereof; and,
FIG. **7** is a bottom view thereof.
The broken lines are for environmental purpose only and form no part of the claimed design.

1 Claim, 7 Drawing Sheets

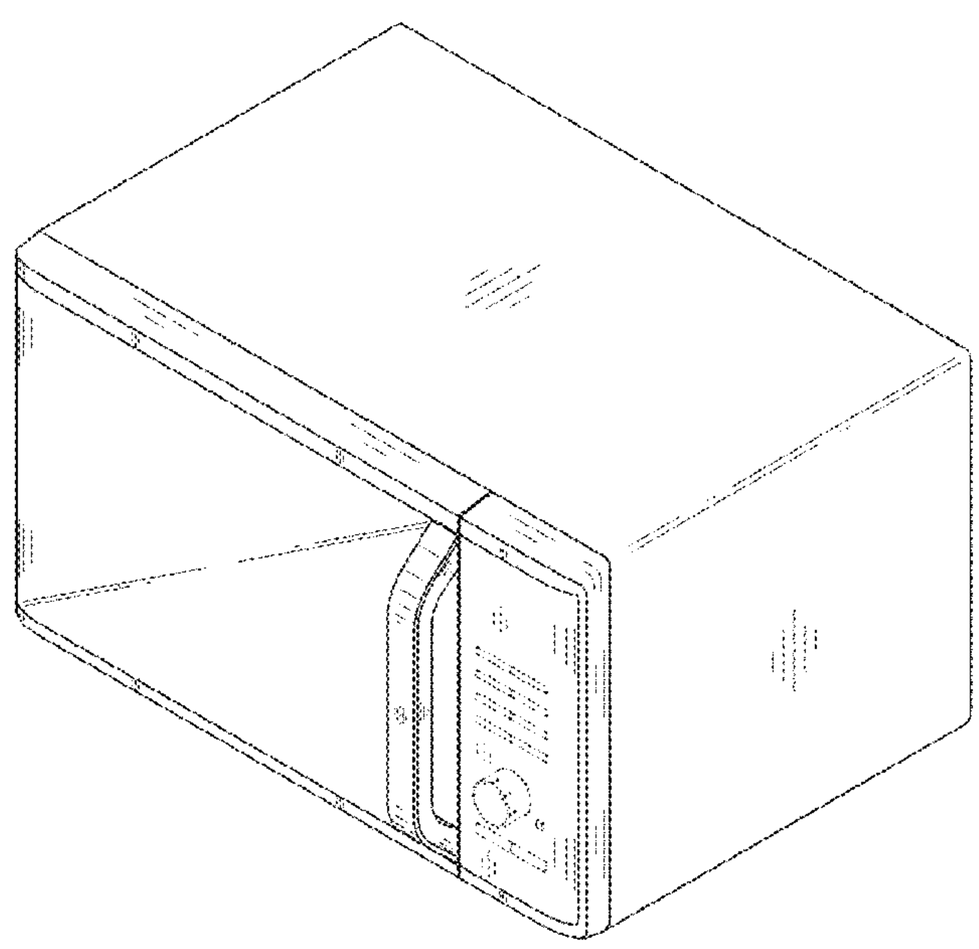

FIG. 1

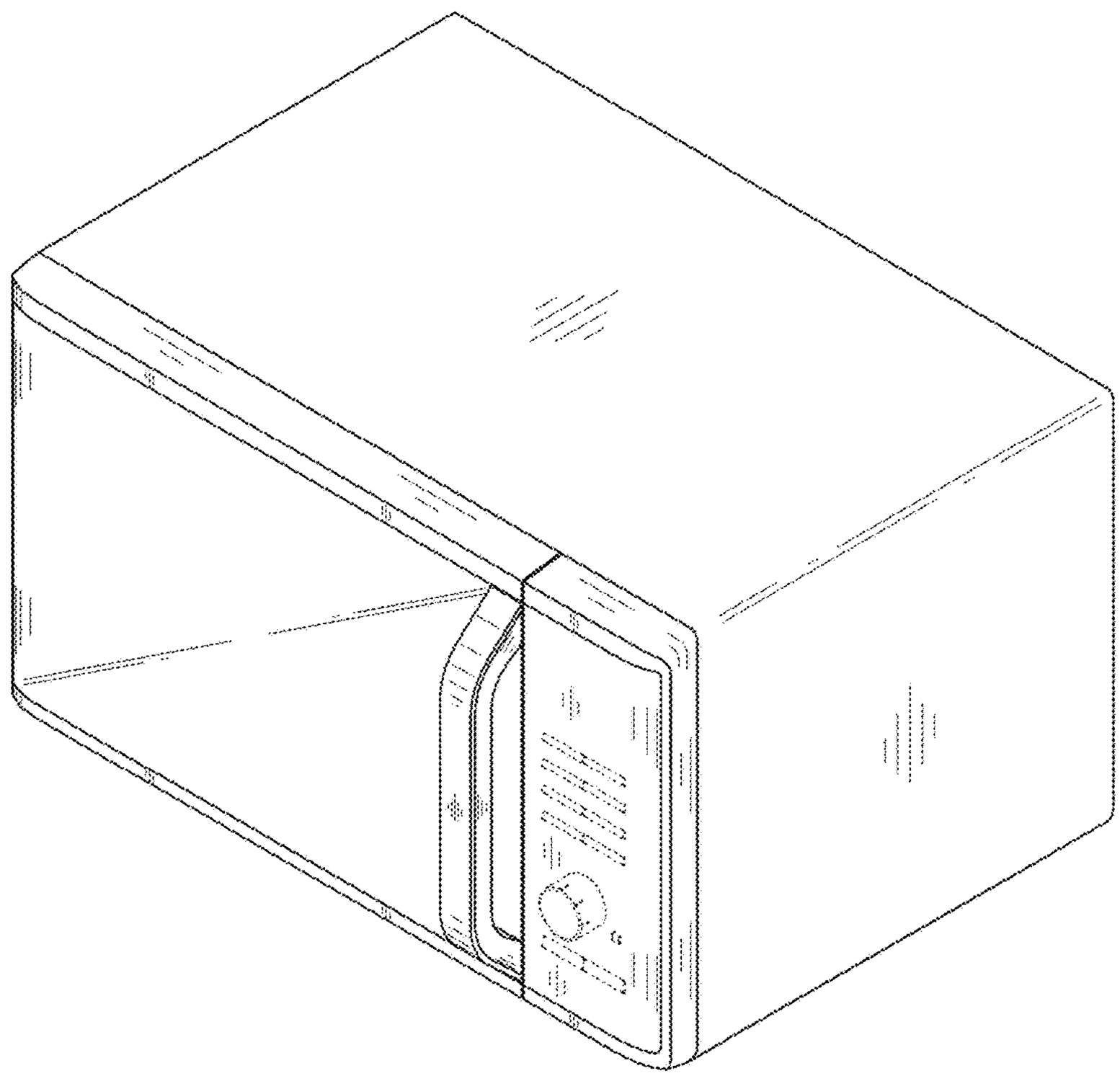

FIG. 2

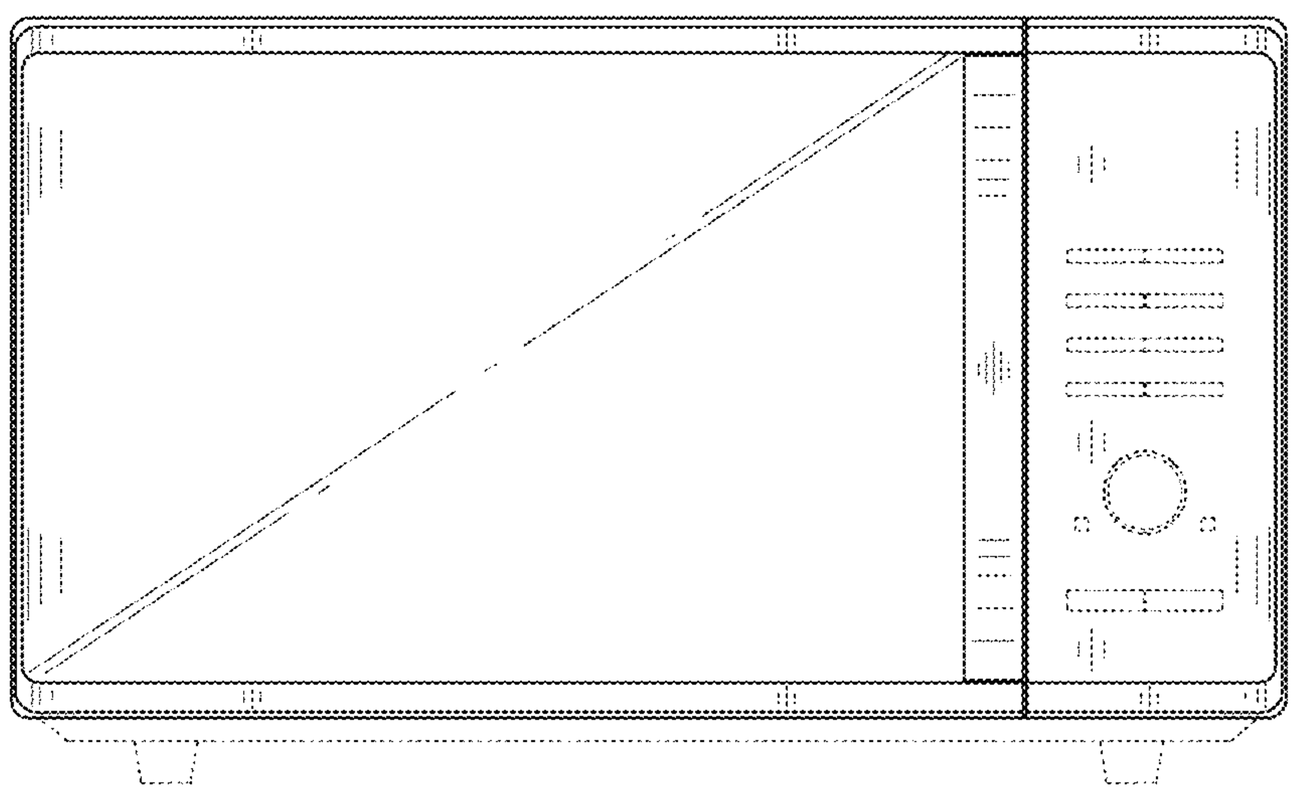

FIG. 3

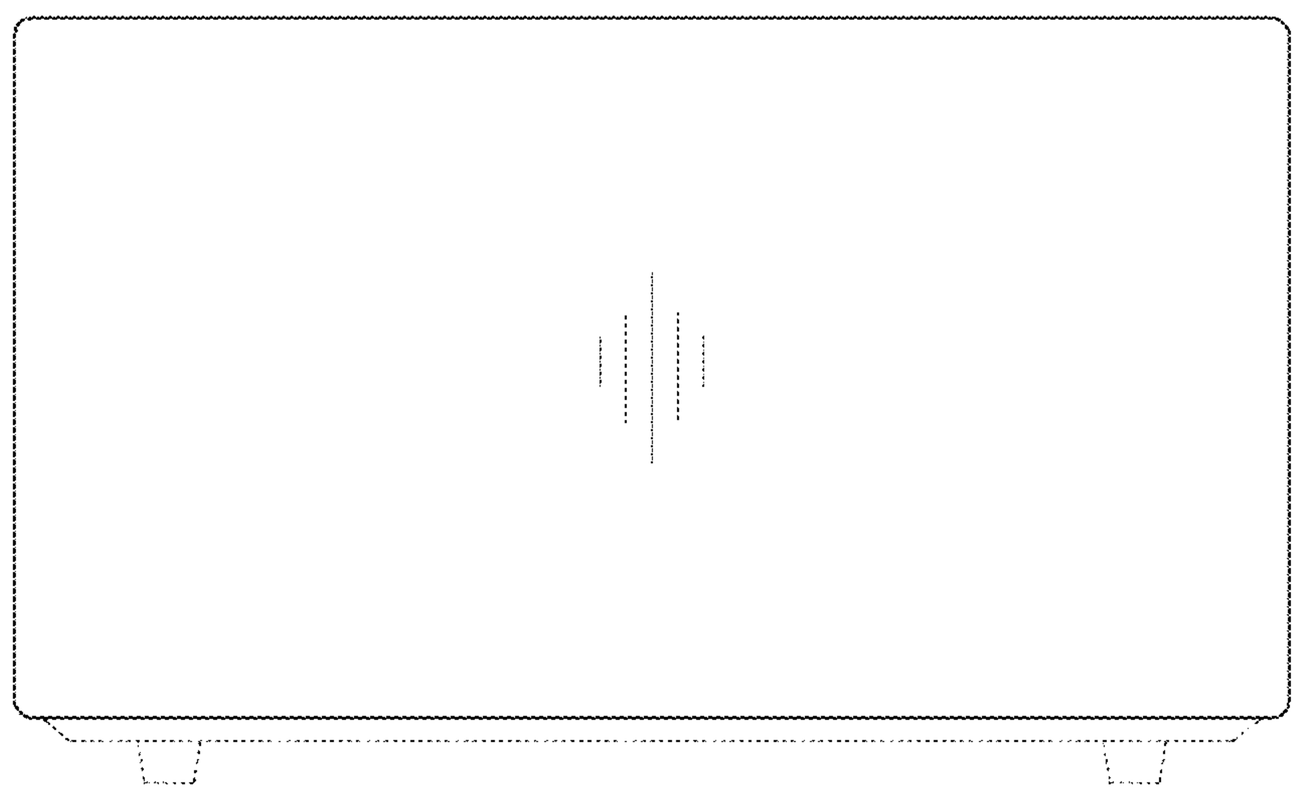

FIG. 4

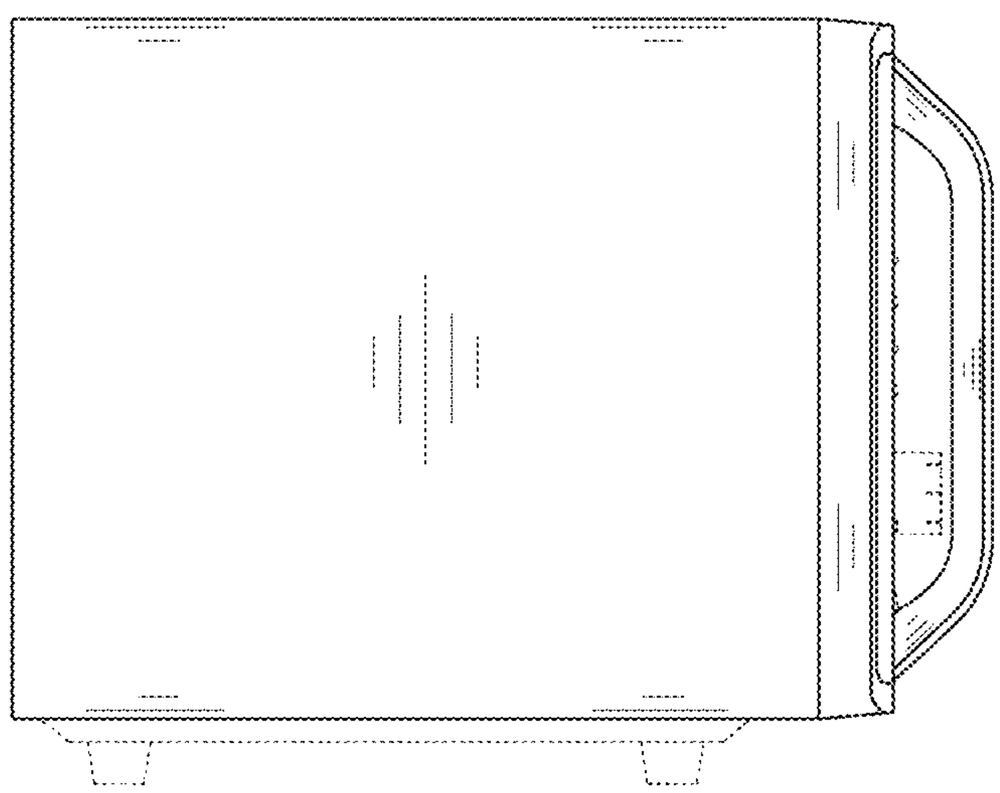

FIG. 5

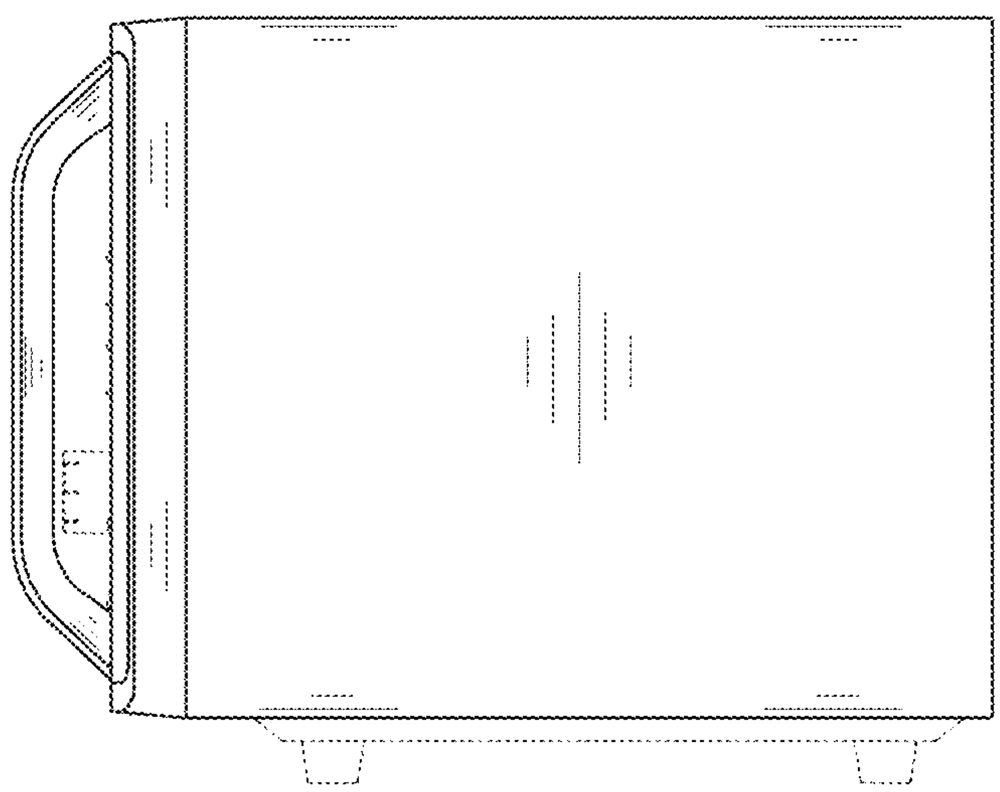

FIG. 6

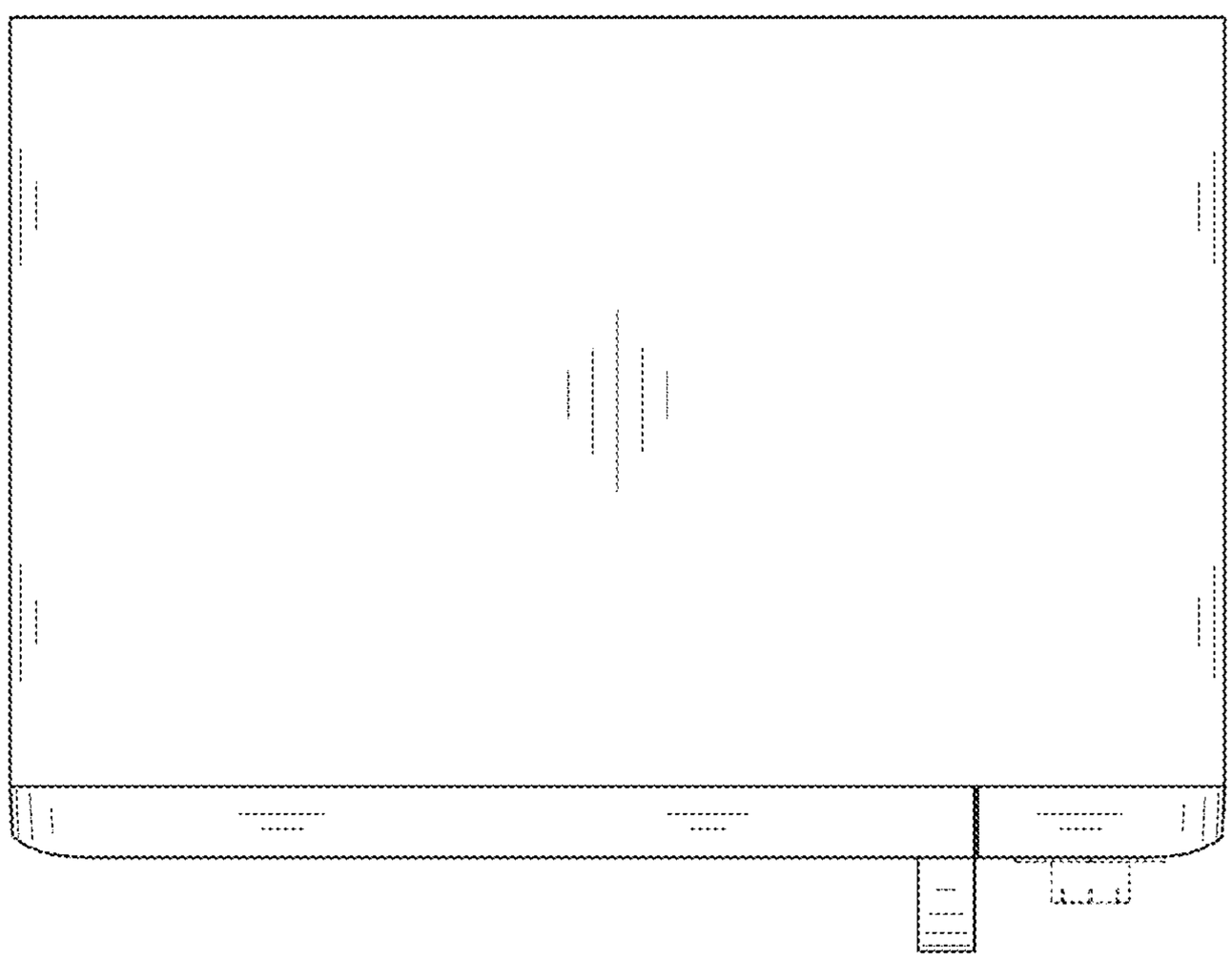
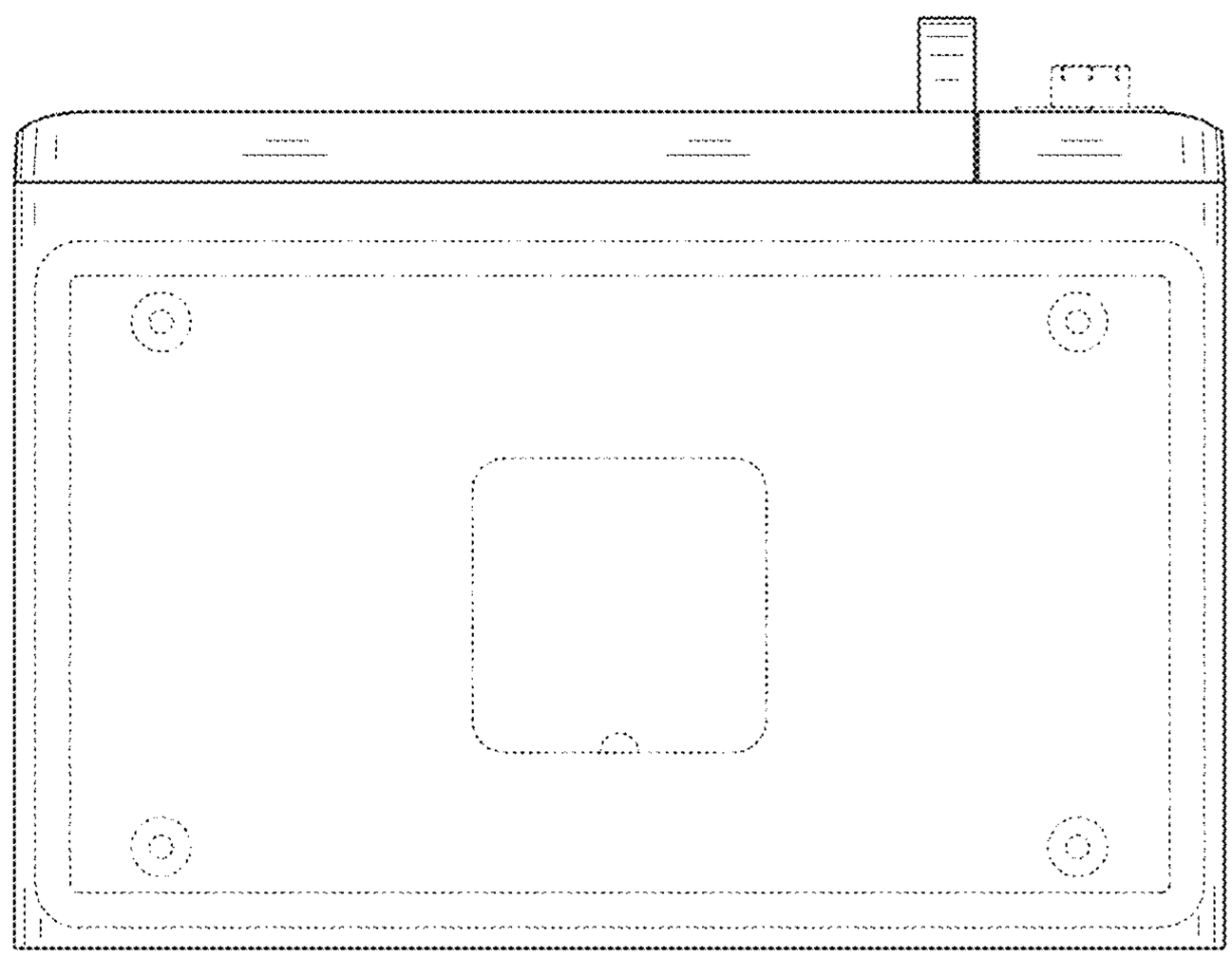
FIG. 7