US00D772810S

(12) United States Design Patent

Frodsham et al.

(10) Patent No.: US D772,810 S
(45) Date of Patent: ** Nov. 29, 2016

(54) **RADIO CHARGING STATION**

(71) Applicant: **Rusty Chisel, LLC**, Salt Lake City, UT (US)

(72) Inventors: **Aaron E. Frodsham**, Salt Lake City, UT (US); **Heather M. Frodsham**, Salt Lake City, UT (US)

(73) Assignee: **Rusty Chisel, LLC**, Salt Lake City, UT (US)

(**) Term: **14 Years**

(21) Appl. No.: **29/503,857**

(22) Filed: **Sep. 30, 2014**

Related U.S. Application Data

(63) Continuation of application No. 14/120,434, filed on Nov. 8, 2013, now abandoned.

(51) **LOC (10) Cl.** **13-02**

(52) **U.S. Cl.**
USPC **D13/107**

(58) **Field of Classification Search**
USPC D13/103, 107, 110, 122–133, 158–163, D13/184, 199; D6/663, 664, 667, 668, D6/668.1; D14/129, 131, 132, 173, 175, D14/188, 193, 265; 312/7.1, 8.7, 8.11, 8.12, 312/8.13, 8.15, 8.2, 204, 272, 272.5, 374, 312/334.5; 369/10, 12, 75.11, 292
CPC H04R 1/345; H04R 1/2819; H04R 1/02; H04R 1/023; H04R 1/025; H04R 1/026; H04R 1/028; G11B 31/00; A47B 81/00; A47B 81/06; A47B 81/61; A47B 81/062; A47B 81/064; A47B 81/067; A47B 81/068; A47B 5/00
See application file for complete search history.

(56) **References Cited**

U.S. PATENT DOCUMENTS

2,020,166 A * 11/1935 Swinyard H04R 1/345 181/154
2,050,575 A * 8/1936 Krause H04R 1/2819 181/155
2,200,297 A * 5/1940 Roberts G11B 31/00 312/290
2,219,687 A * 10/1940 Kenney H03J 5/08 334/87
2,239,170 A * 4/1941 Gray H04R 1/021 181/148

(Continued)

OTHER PUBLICATIONS

Zenith 12 A58 Baby Stratosphere Resored Antique Radio—1936, posted on NY Times Store. Available from Internet, <URL https://www.nytimes.com/store/zenith-12-a58-baby-stratosphere-restored-antique-radio-1936-radio279.html>.*
Zenith 7S363 Restored Antique Radio—1939, posted on NY Times store. Available from Internet, <URL Https://www.nytimes.com/store/zenith-7s363-restored-antique-radio-1939.html>.*
Sears Roebuck & Co. Fall & Winter 1935, pp. 570-573. Battery Radio Cabinets shown on pages. vol. TS199.S439.*

(Continued)

Primary Examiner — Karen S Acker
Assistant Examiner — Alyse Joseph

(57) **CLAIM**

The ornamental design for a radio charging station, as shown and described.

DESCRIPTION

FIG. **1** is a top, front and ride side perspective view of a radio charging station showing our new design;
FIG. **2** is a front elevational view thereof;
FIG. **3** is a rear elevational view thereof;
FIG. **4** is a left side elevational view thereof;
FIG. **5** is a right side elevational view thereof;
FIG. **6** is a top plan view thereof;
FIG. **7** is a bottom plan view thereof;
FIG. **8** is a top, facing perspective view with the lid in an open position;
FIG. **9** is a top plan view thereof; and,
FIG. **10** is a rear elevational view of the design of FIG. **1** showing the door in an open position.
The broken lines and areas within the broken lines depict environmental subject matter that forms no part of the claimed design.

1 Claim, 8 Drawing Sheets

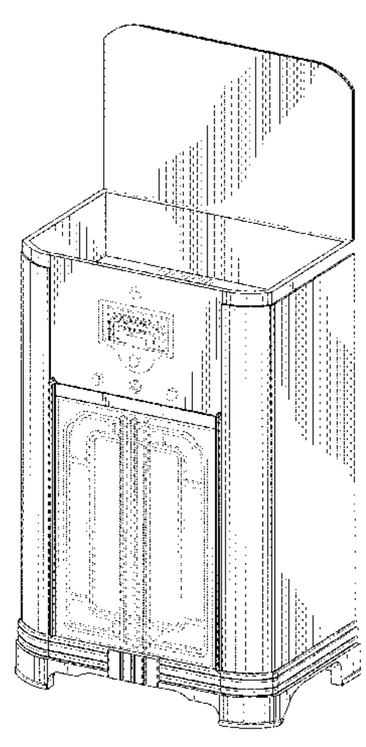

(56) **References Cited**

U.S. PATENT DOCUMENTS

2,247,171 A * 6/1941 Harman G11B 31/00
312/8.2
2,300,287 A * 10/1942 Huarisa G11B 31/00
126/340
2,447,572 A * 8/1948 Emde H04B 1/08
312/325
D591,080 S * 4/2009 Greiner D6/657

OTHER PUBLICATIONS

History of Radio Pictures, posted at electronics.howstuffworks.com, posting date not posted, © 2016 HowStuffWorks, a division of InfoSpace LLC., [site visited Jul. 7, 2016]. Available from Internet: <http://electronics.howstuffworks.com/history-of-radio-pictures.htm>.*

* cited by examiner

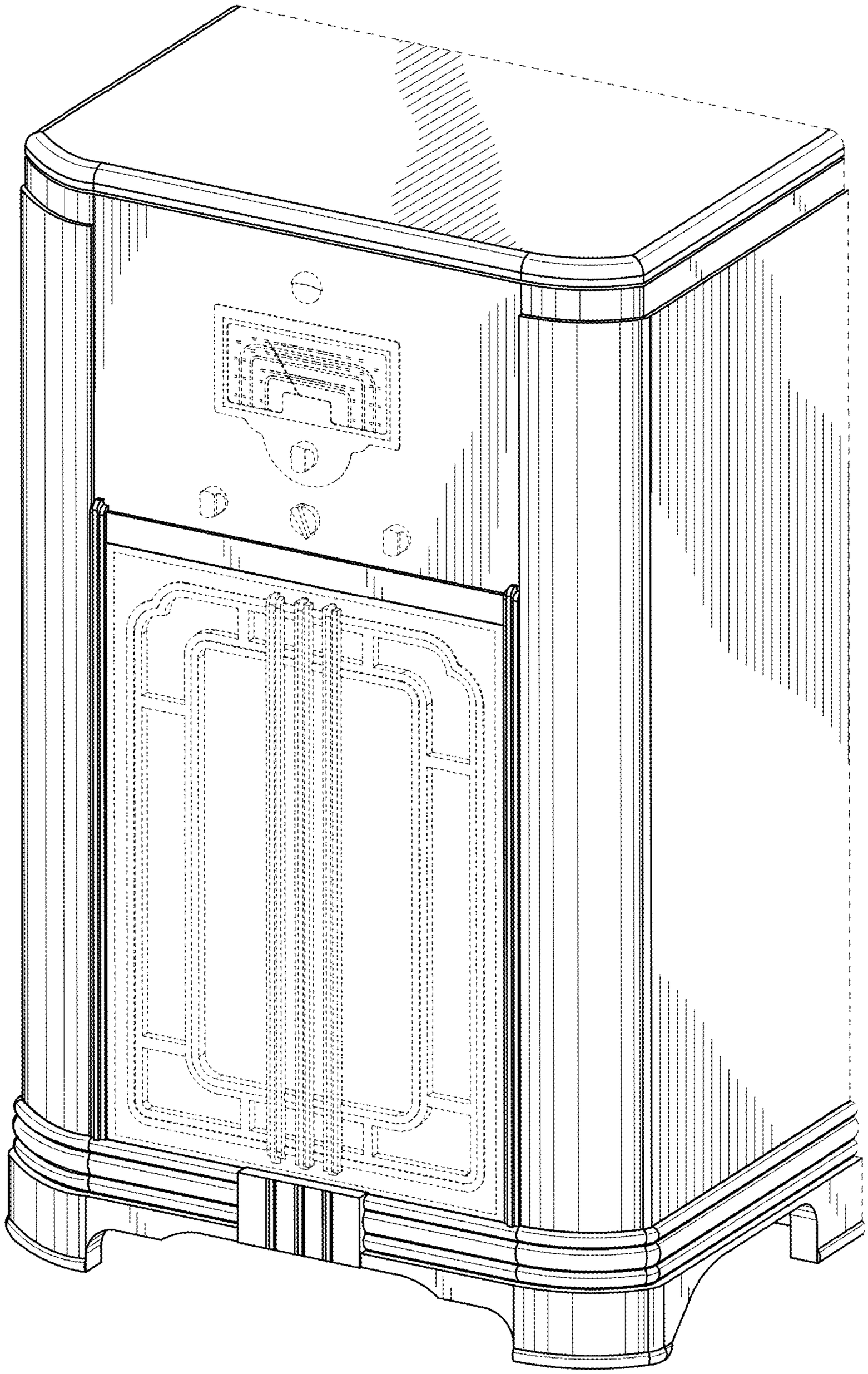

FIG. 1

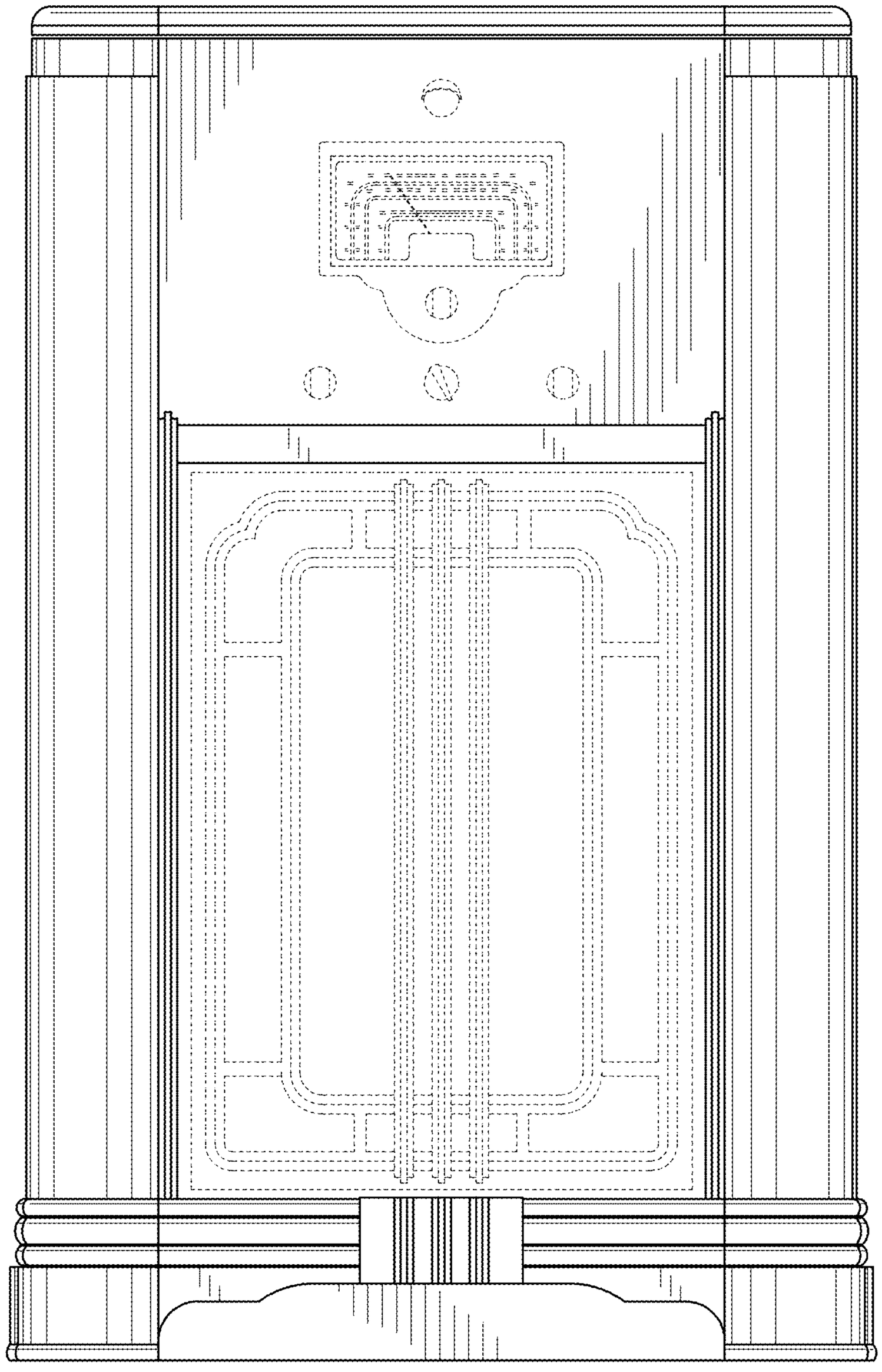

FIG. 2

FIG. 3

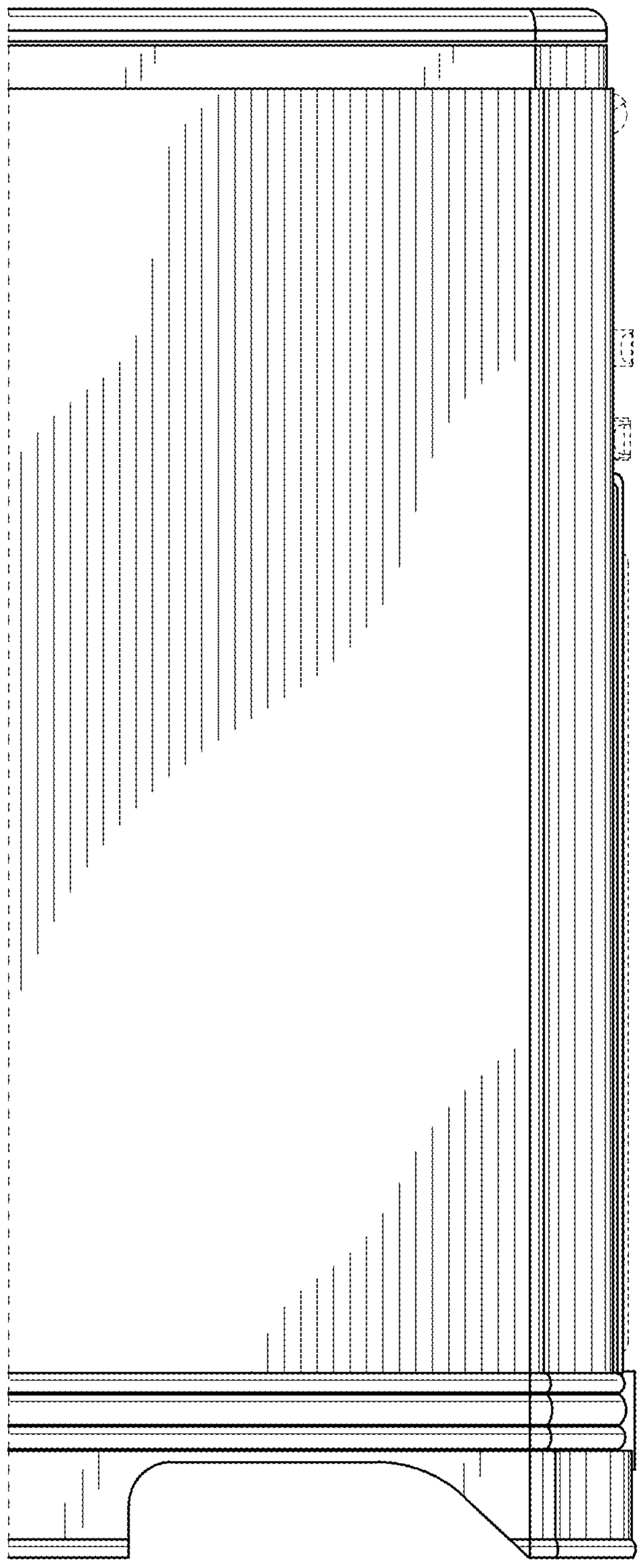

FIG. 4

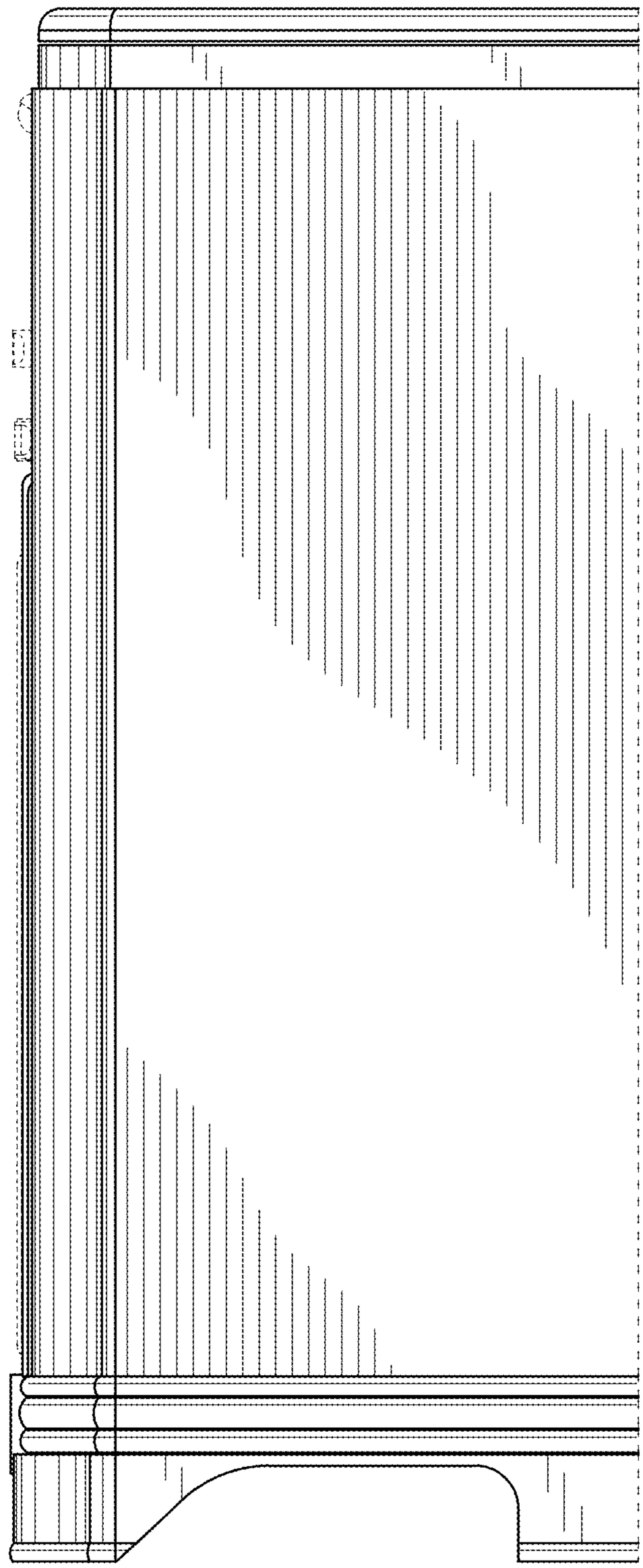

FIG. 5

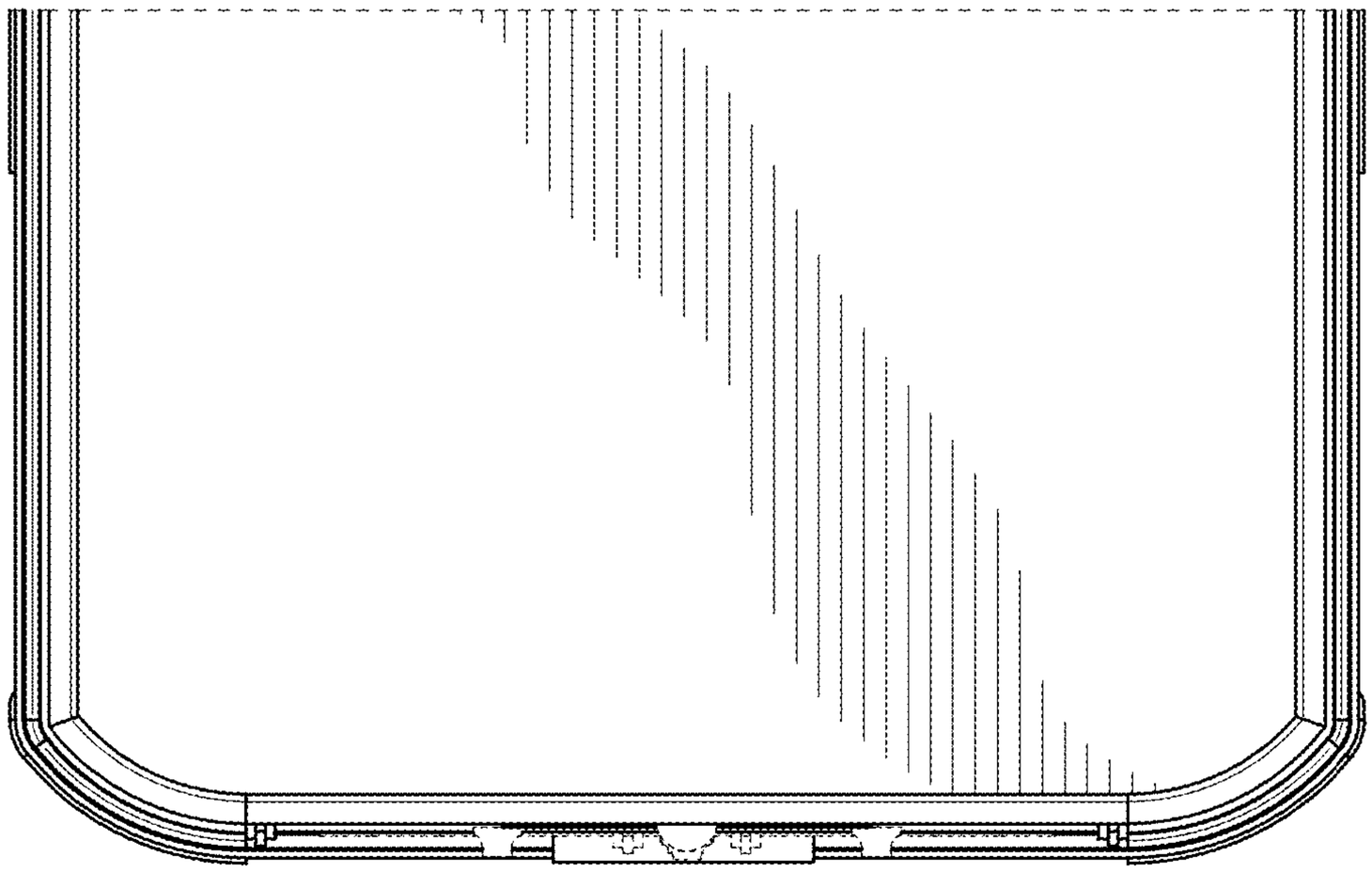

FIG. 6

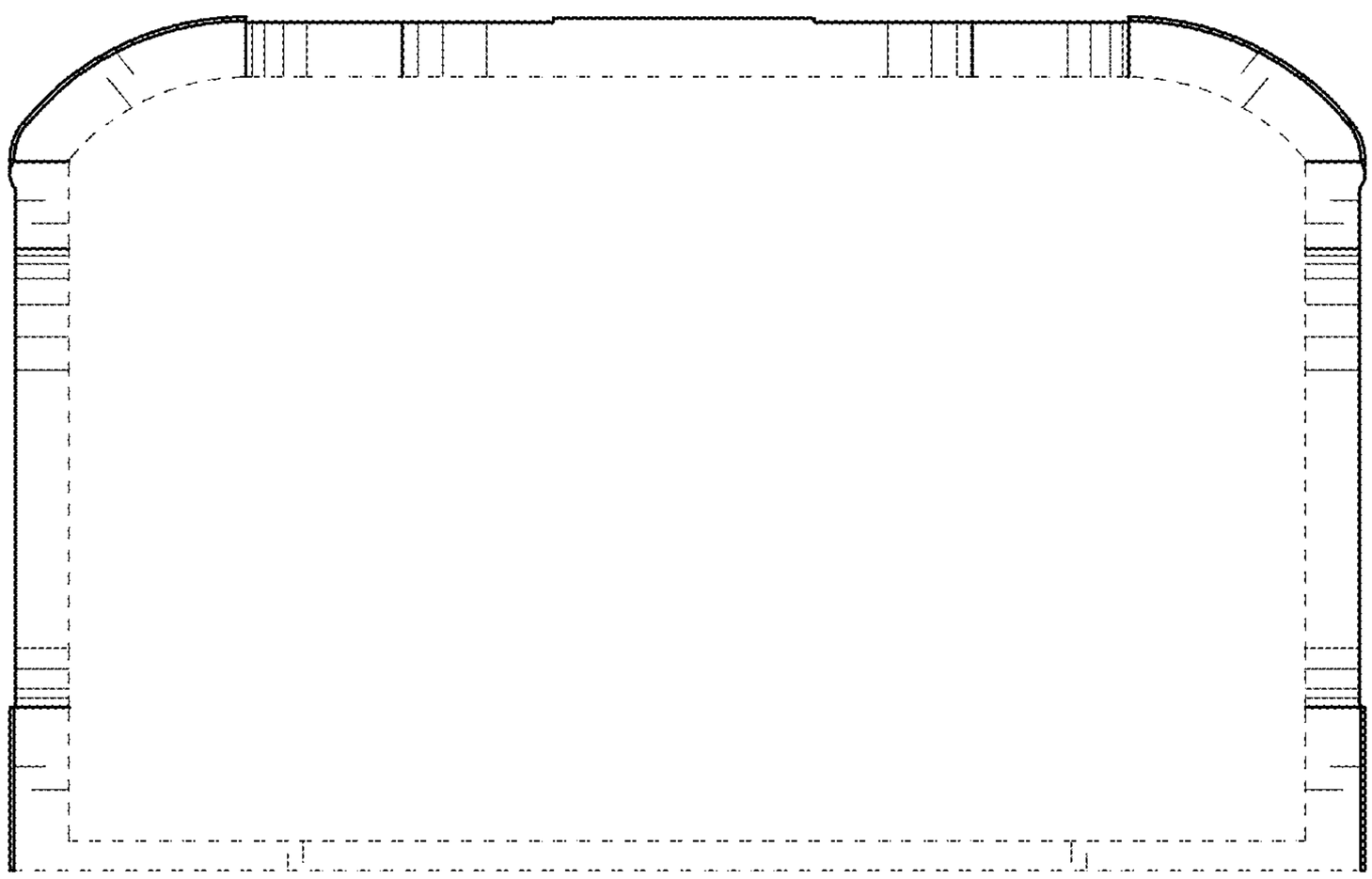

FIG. 7

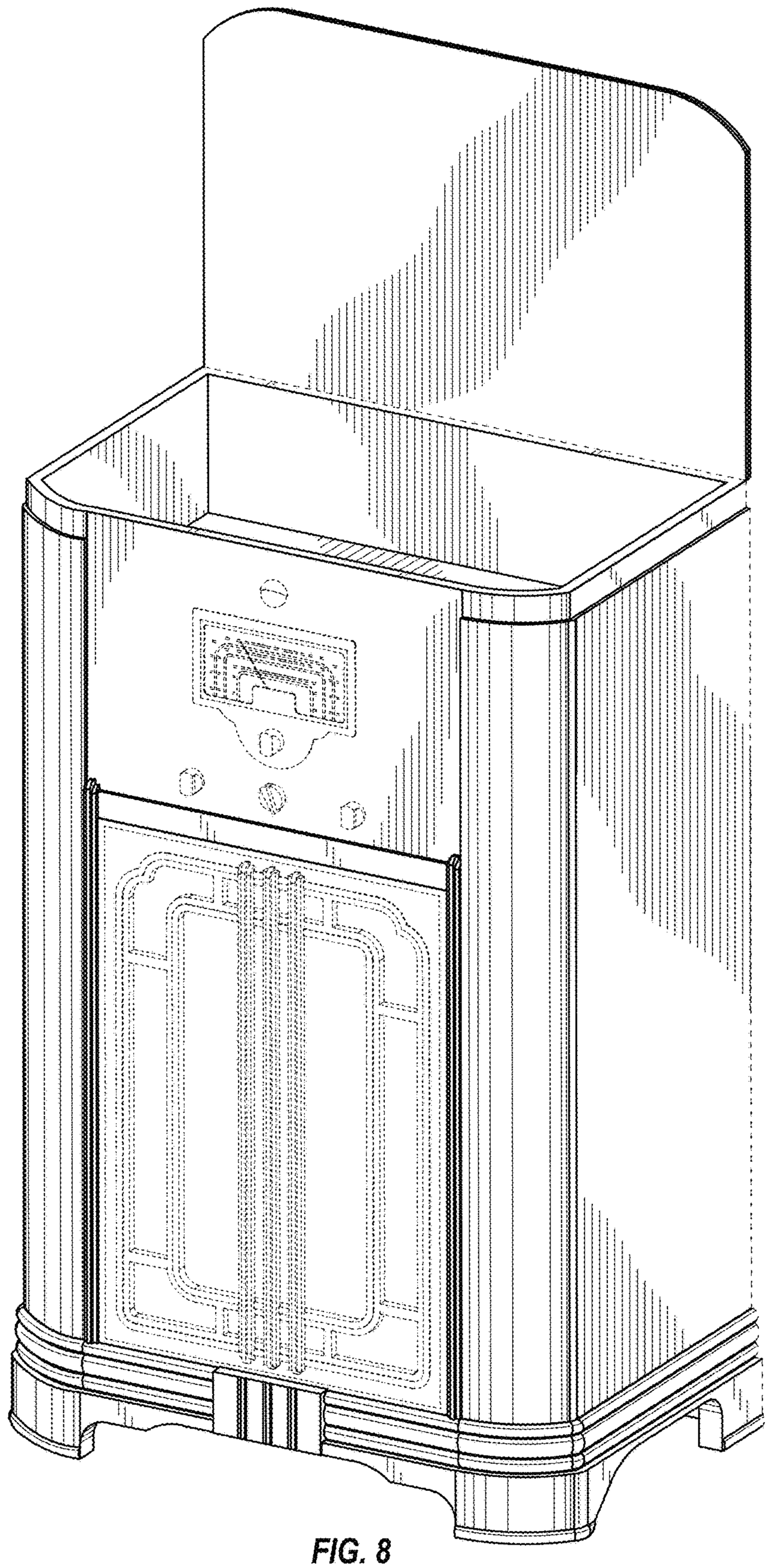

FIG. 8

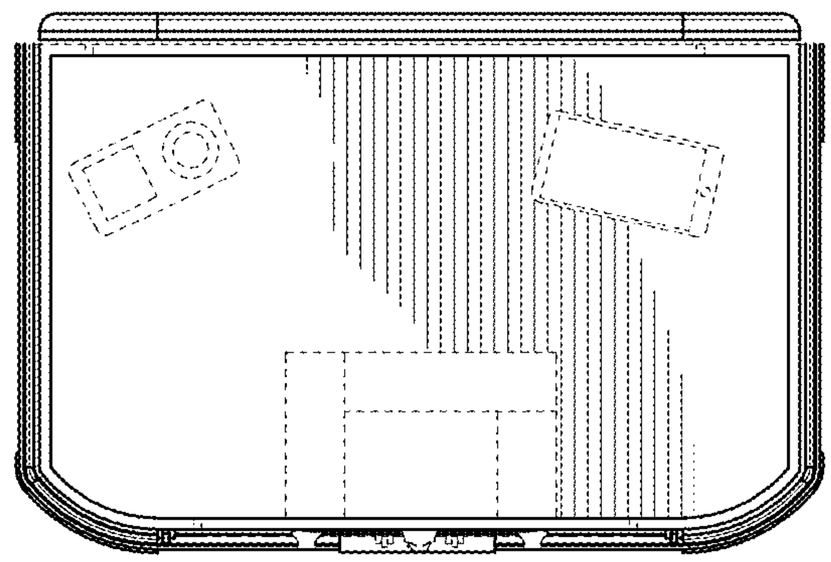

FIG. 9

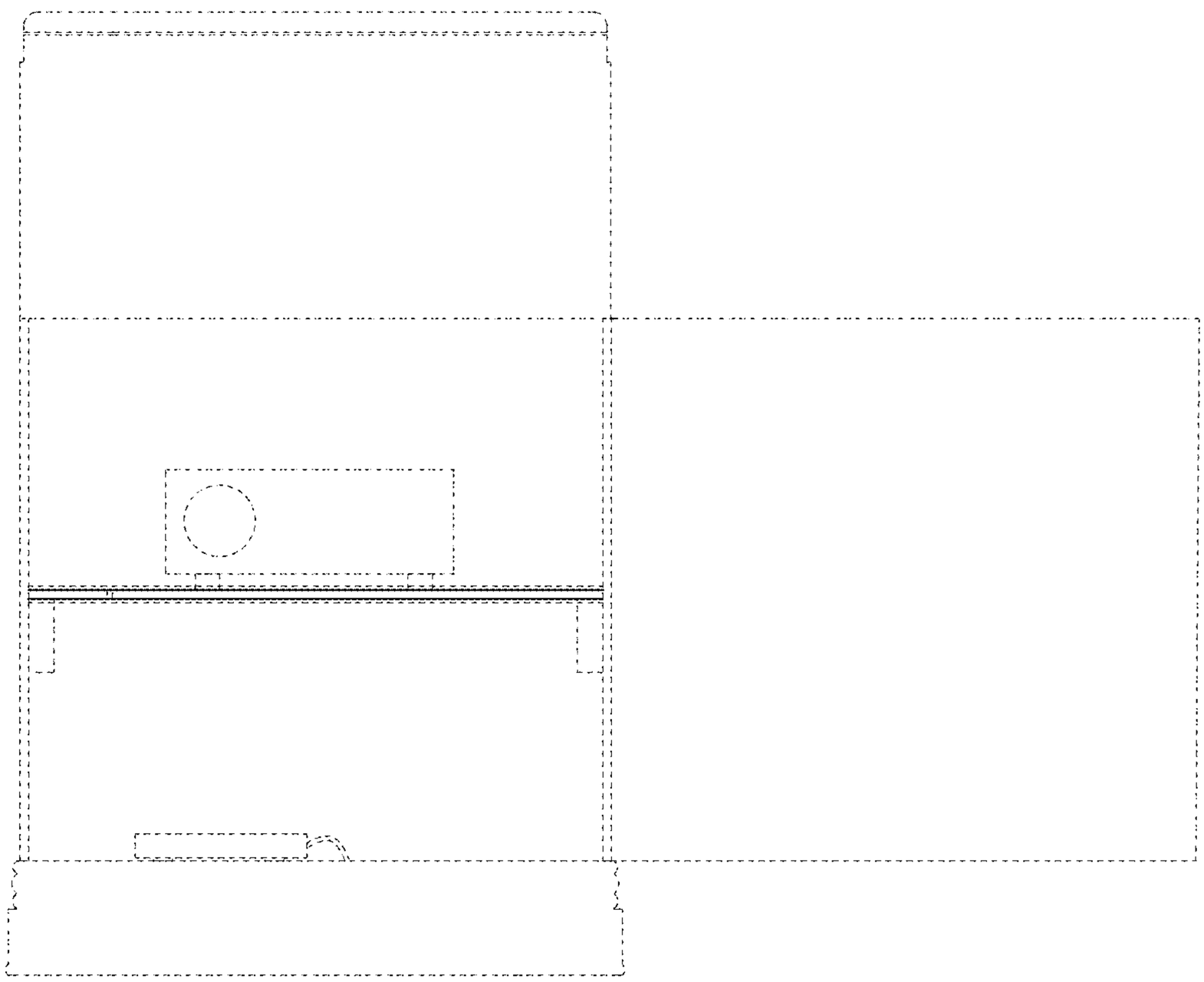

FIG. 10