US00D772630S

# (12) United States Design Patent
Toh

(10) Patent No.: US D772,630 S
(45) Date of Patent: ** Nov. 29, 2016

(54) **SEAT ARM**

(71) Applicant: **HTL International Holdings Ltd.**, Singapore (SG)

(72) Inventor: **Chye Seng Toh**, Singapore (SG)

(73) Assignee: **HTL INTERNATIONAL HOLDINGS LTD.**, Singapore (SG)

(**) Term: **14 Years**

(21) Appl. No.: **29/524,343**

(22) Filed: **Apr. 20, 2015**

(51) **LOC (10) Cl.** ..... **06-01**

(52) **U.S. Cl.**
USPC ..... **D6/717**

(58) **Field of Classification Search**
USPC ..... D6/334, 381, 708, 716.1, 716.2, 716.4, D6/717; 297/232, 233, 445.1, 446.1, 297/448.1; 5/12.1, 12.2
CPC ..... A47C 1/12; A47C 11/00; A47C 17/00; A47C 17/02
See application file for complete search history.

(56) **References Cited**

U.S. PATENT DOCUMENTS

D419,328 S * 1/2000 Natuzzi ..... D6/334
D485,687 S * 1/2004 Natuzzi ..... D6/334
D509,370 S * 9/2005 Natuzzi ..... D6/334
D521,766 S * 5/2006 Natuzzi ..... D6/381
D525,044 S * 7/2006 Natuzzi ..... D6/381
D525,453 S * 7/2006 Natuzzi ..... D6/381
D552,872 S * 10/2007 Natuzzi ..... D6/381
D566,981 S * 4/2008 Natuzzi ..... D6/381
D572,034 S * 7/2008 Natuzzi ..... D6/381
D581,691 S * 12/2008 Natuzzi ..... D6/381
D590,167 S * 4/2009 Natuzzi ..... D6/381
D590,172 S * 4/2009 Natuzzi ..... D6/381
D590,176 S * 4/2009 Natuzzi ..... D6/381
D590,177 S * 4/2009 Natuzzi ..... D6/381
D592,878 S * 5/2009 Natuzzi ..... D6/381

* cited by examiner

*Primary Examiner* — Sandra Snapp
(74) *Attorney, Agent, or Firm* — Maier & Maier, PLLC

(57) **CLAIM**

The ornamental design for a seat arm, as shown and described.

**DESCRIPTION**

FIG. **1** is a front perspective view of a seat arm with environment;
FIG. **2** is a front elevation view thereof;
FIG. **3** is a left side view thereof;
FIG. **4** is a right side view thereof;
FIG. **5** is a back elevation view thereof;
FIG. **6** is a top plan view thereof;
FIG. **7** is a front perspective view of a seat arm with alternative environment;
FIG. **8** is a front elevation view thereof;
FIG. **9** is a left side view thereof;
FIG. **10** is a right side view thereof;
FIG. **11** is a back elevation view thereof;
FIG. **12** is a top plan view thereof;
FIG. **13** is a front perspective view of a seat arm with a second alternative environment;
FIG. **14** is a front elevation view thereof;
FIG. **15** is a left side view thereof;
FIG. **16** is a right side view thereof;
FIG. **17** is a back elevation view thereof; and,
FIG. **18** is a top plan view thereof.
The dashed broken line showing in the Figures is for illustrative purposes only and forms no part of the claimed design.

**1 Claim, 15 Drawing Sheets**

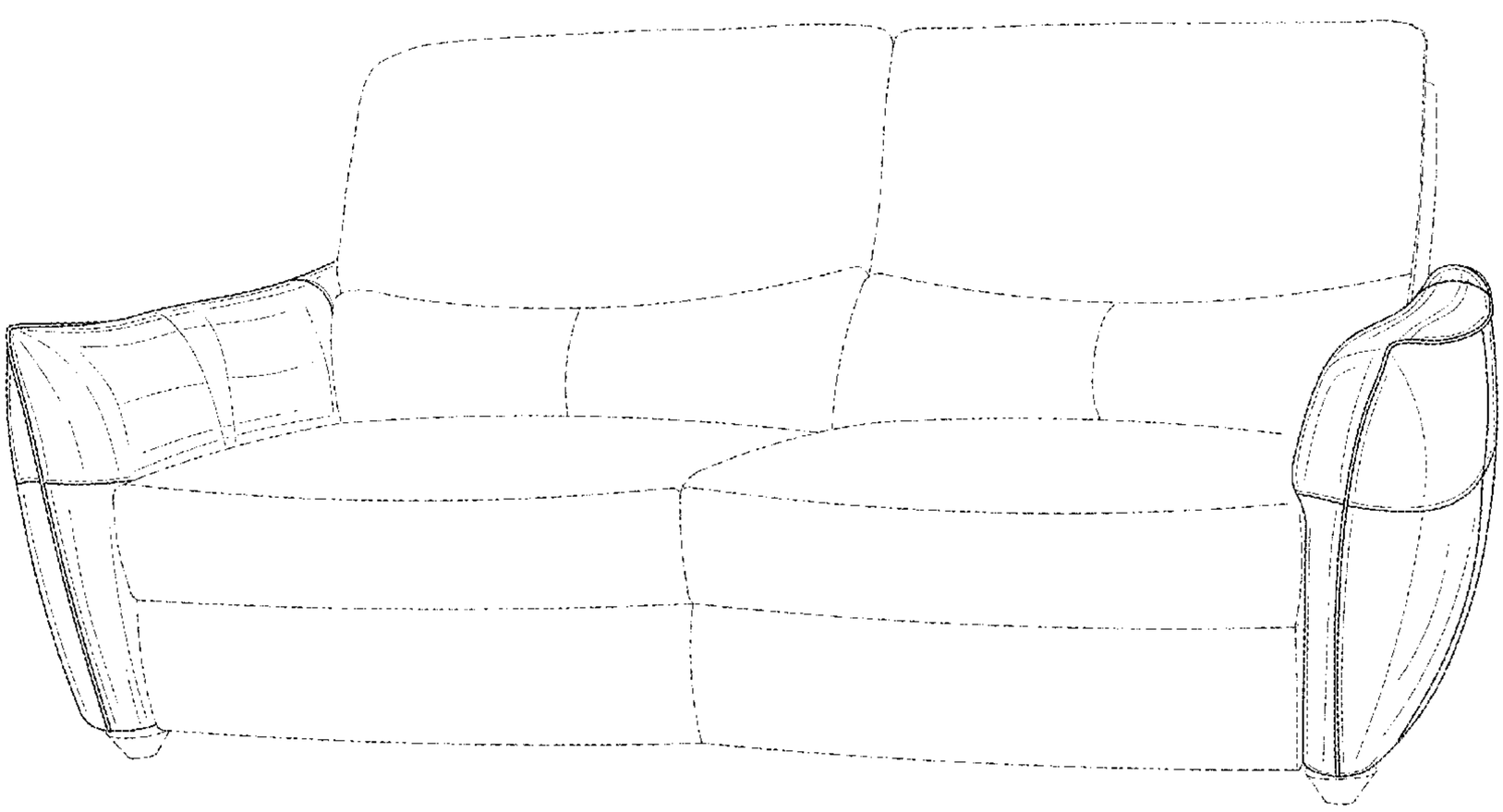

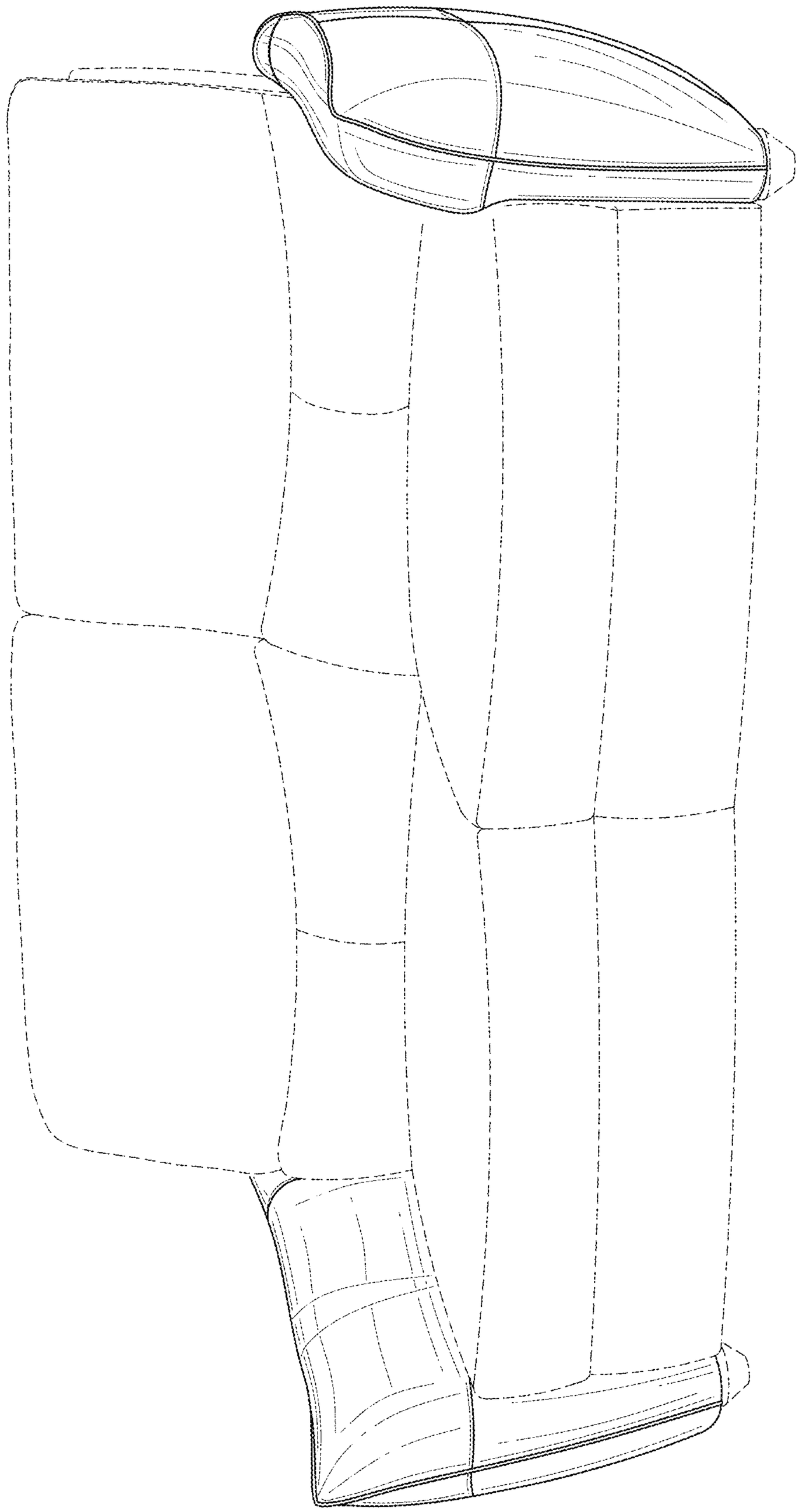

FIG. 1

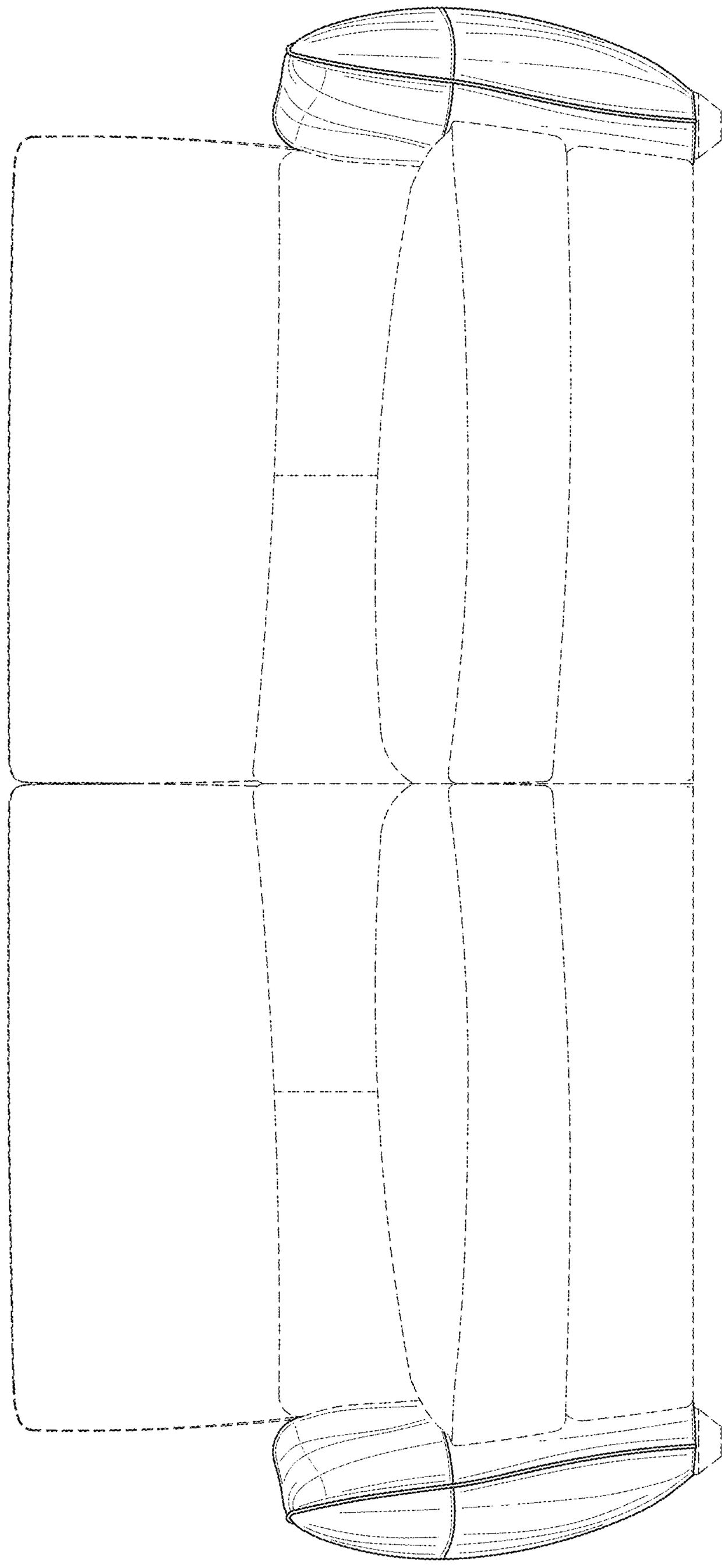

FIG. 2

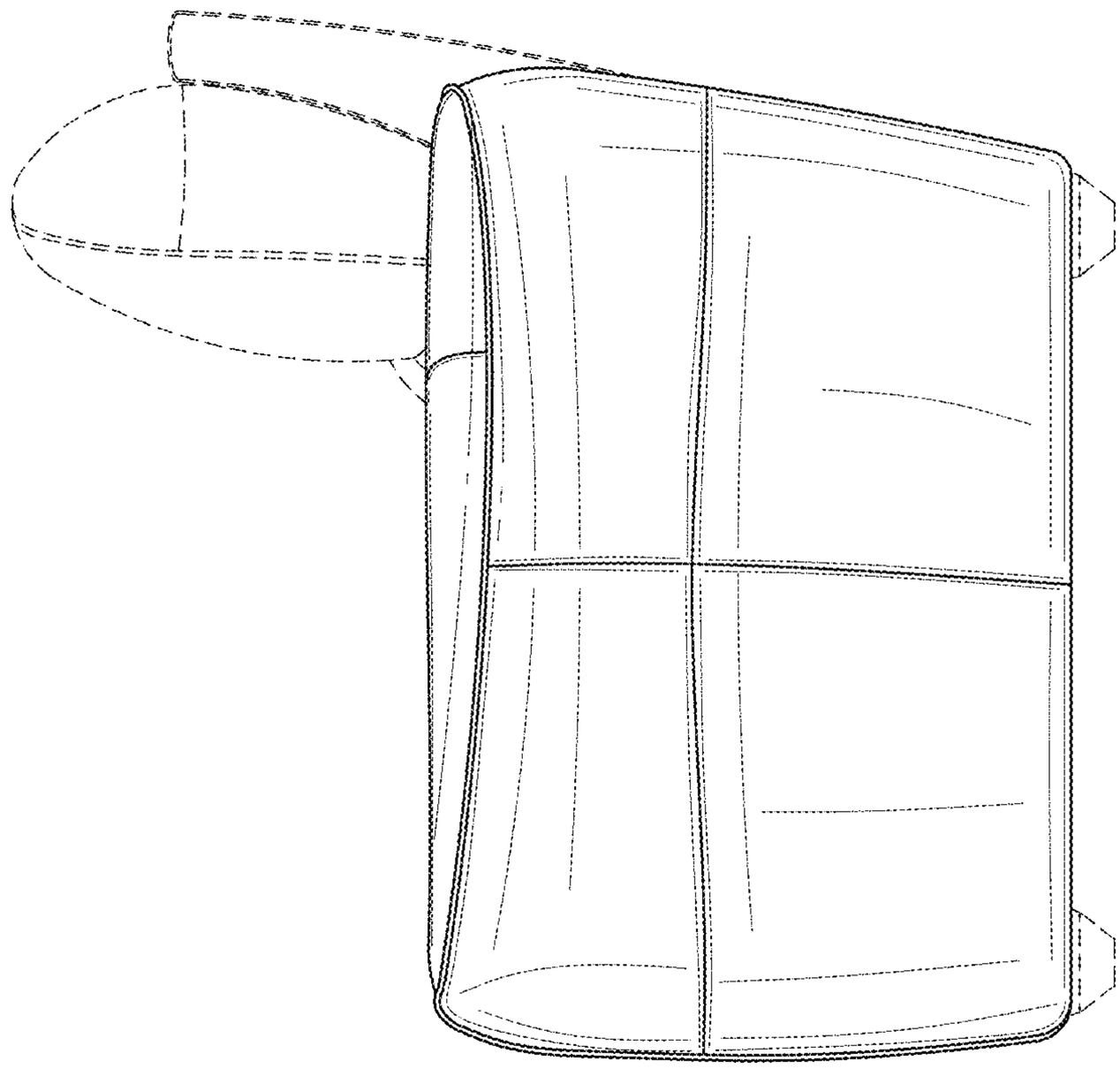

FIG. 4

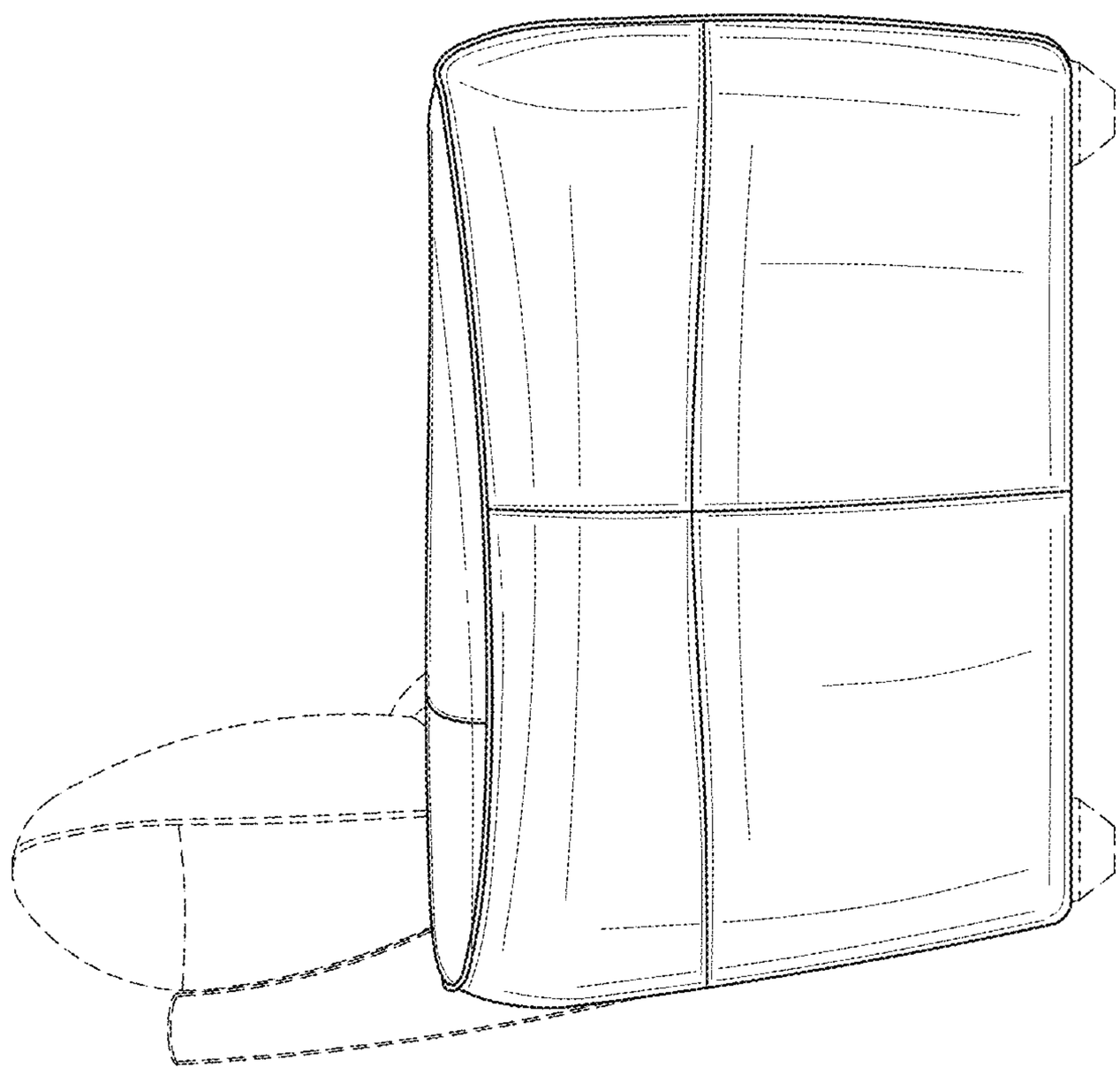

FIG. 3

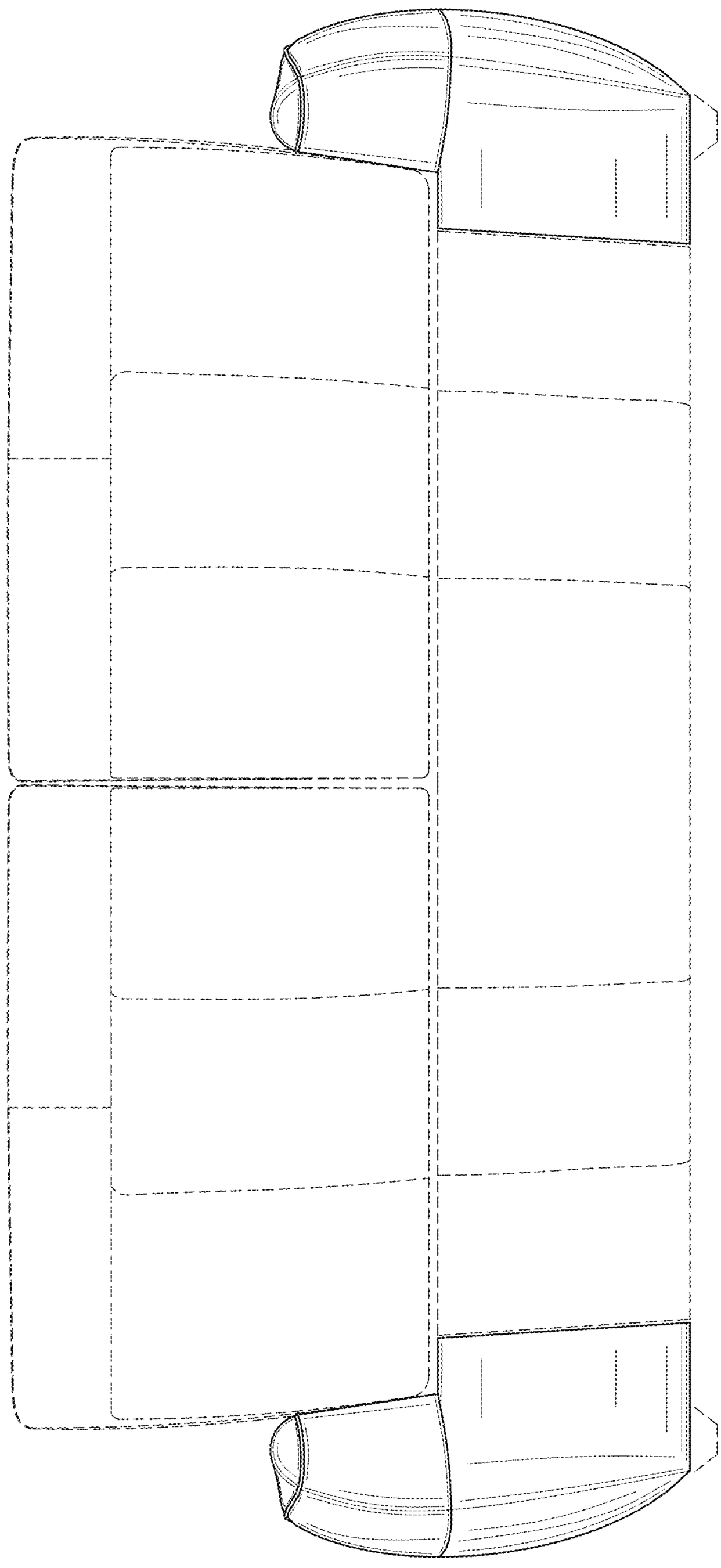

FIG. 5

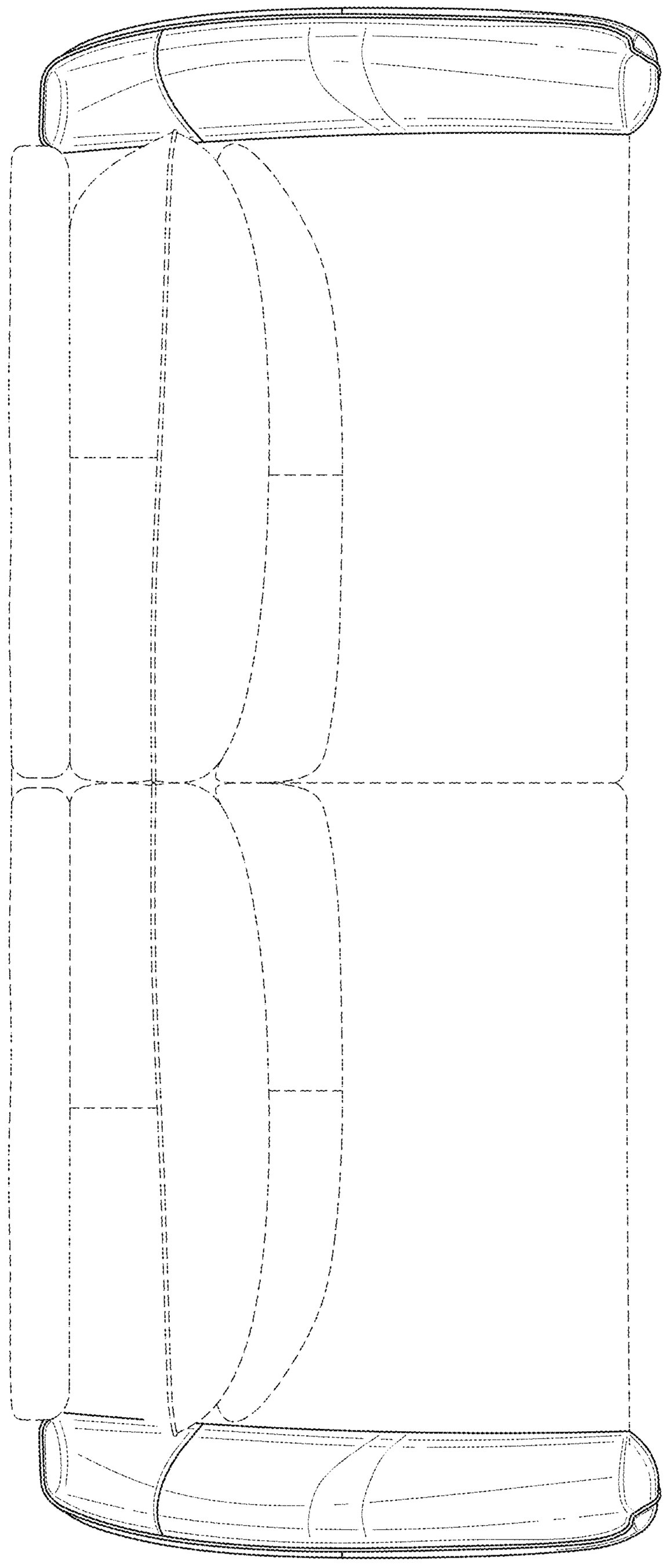

FIG. 6

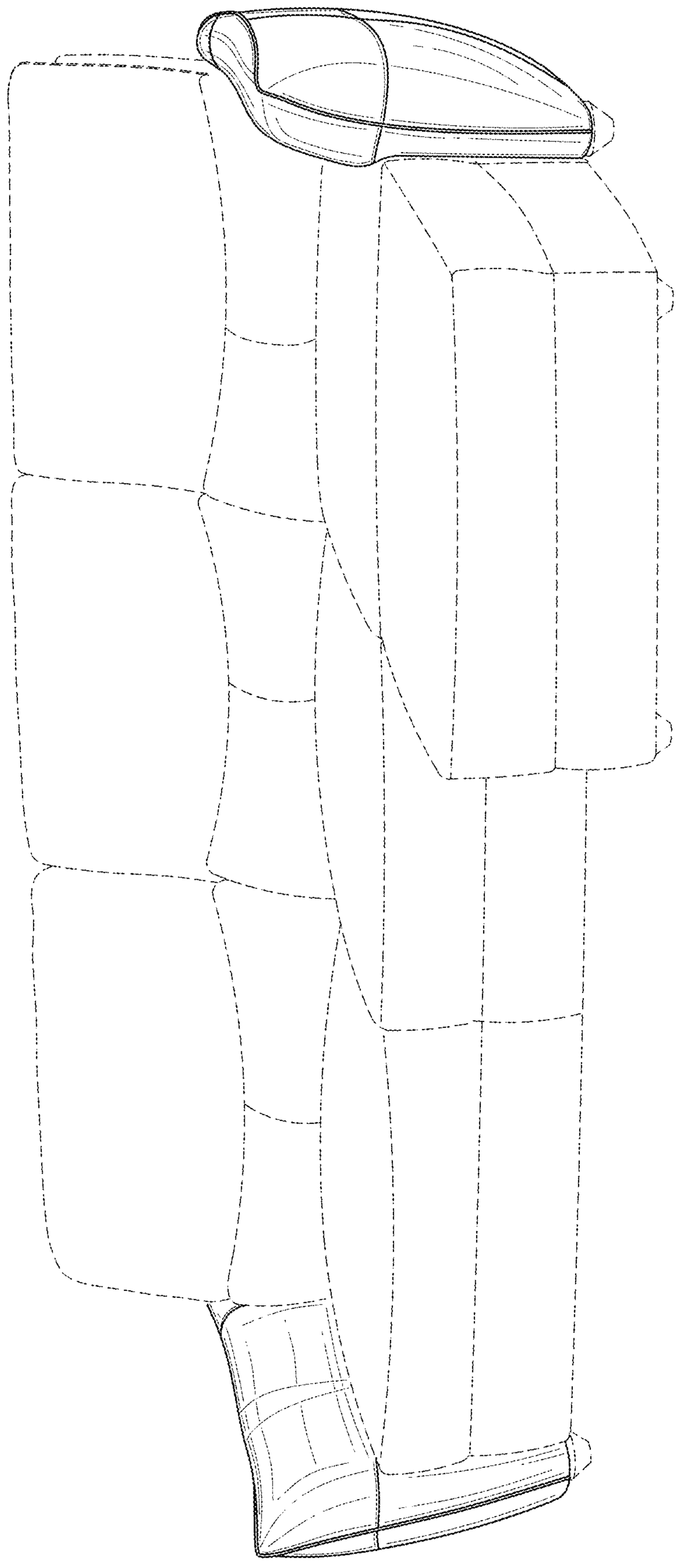

FIG. 7

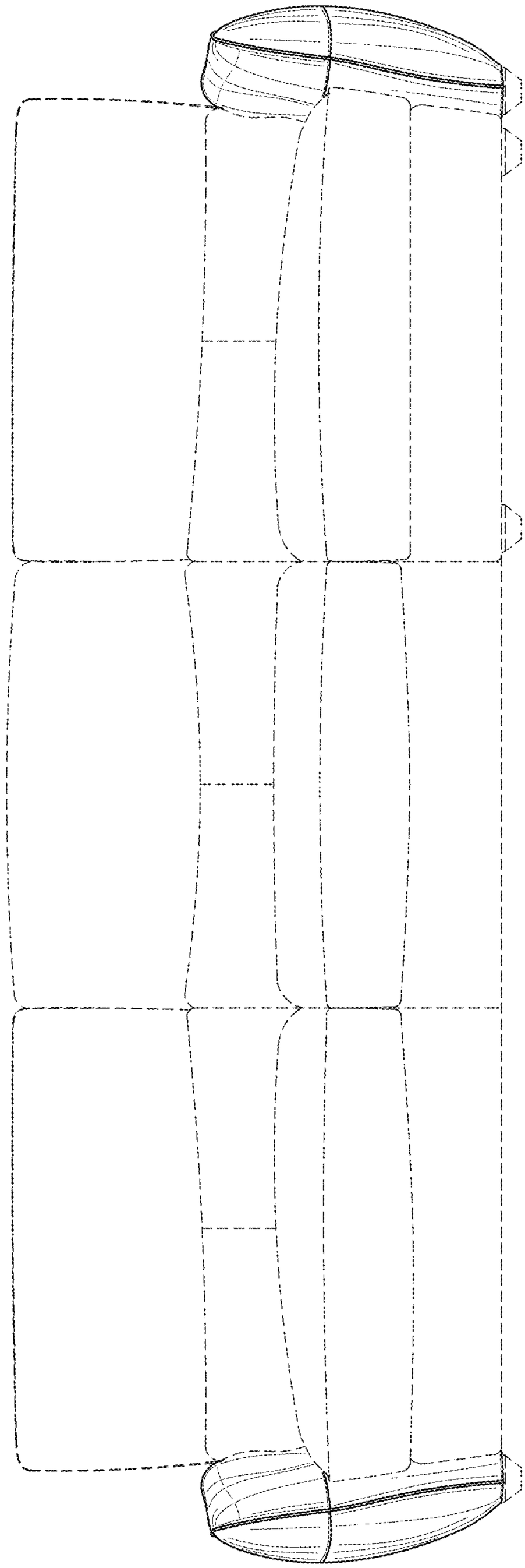

FIG. 8

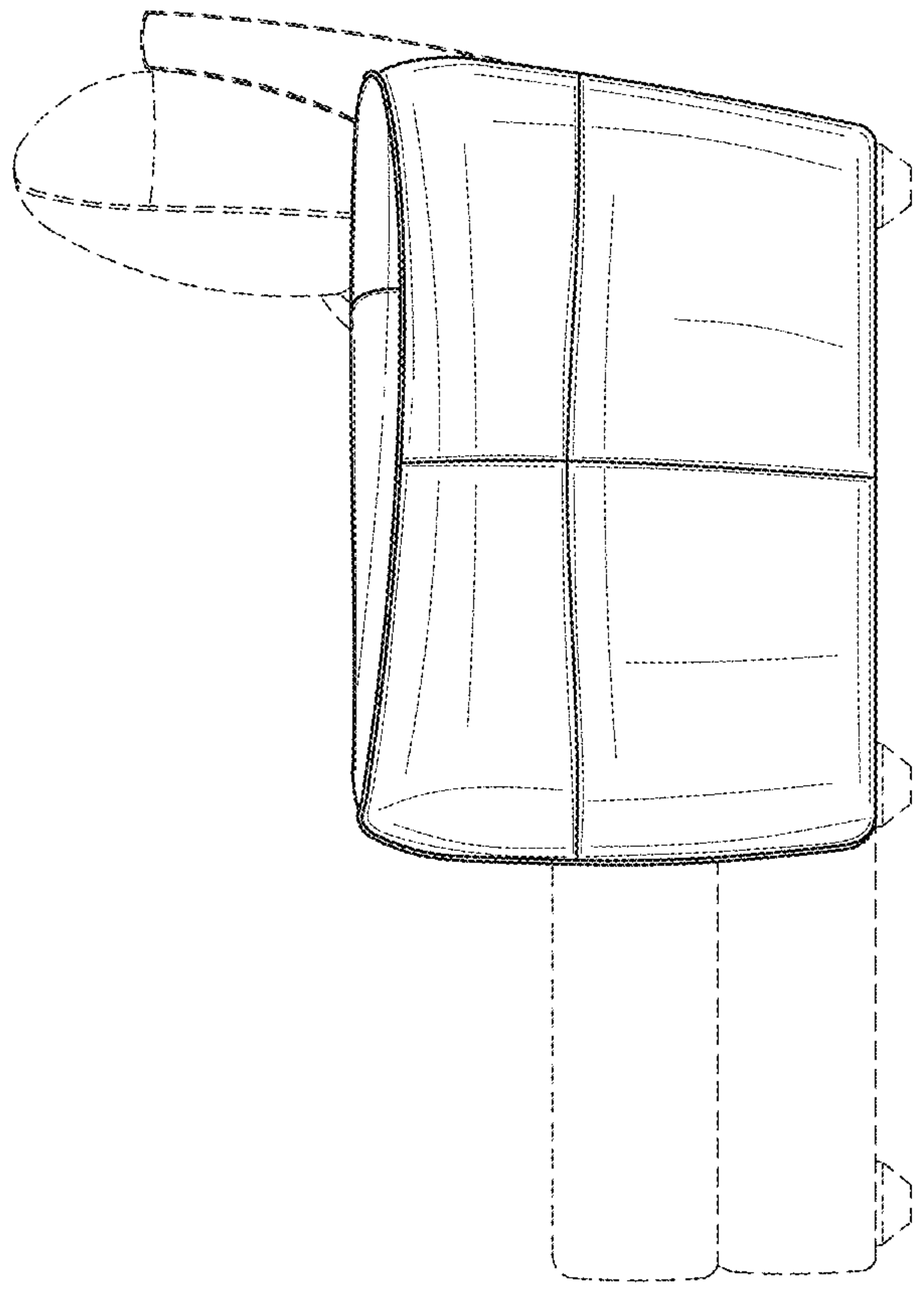

FIG. 10

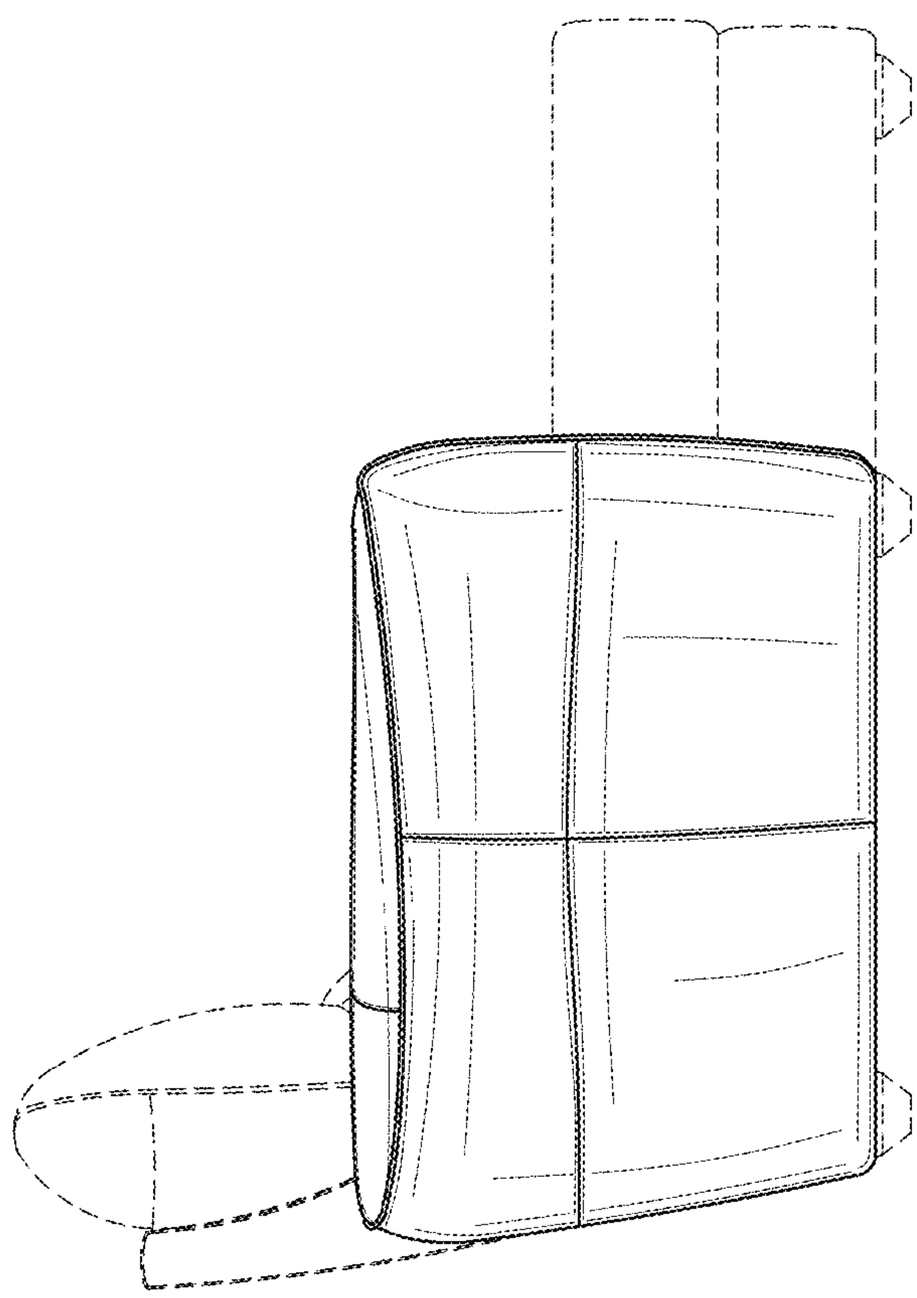

FIG. 9

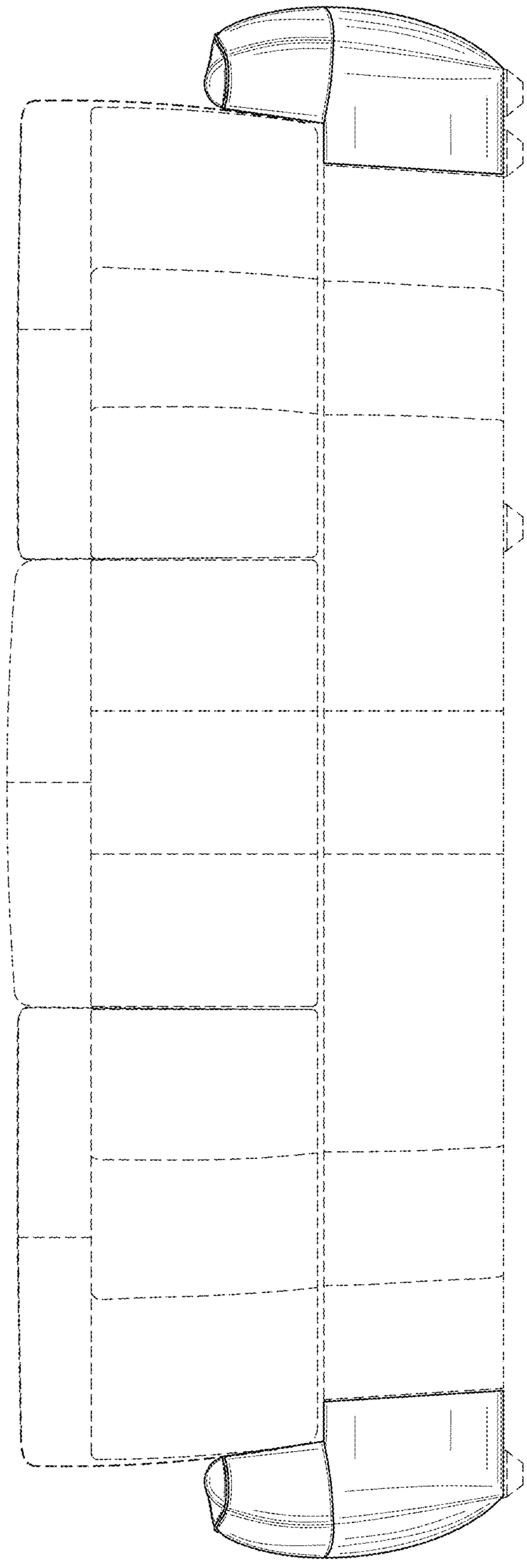

FIG. 11

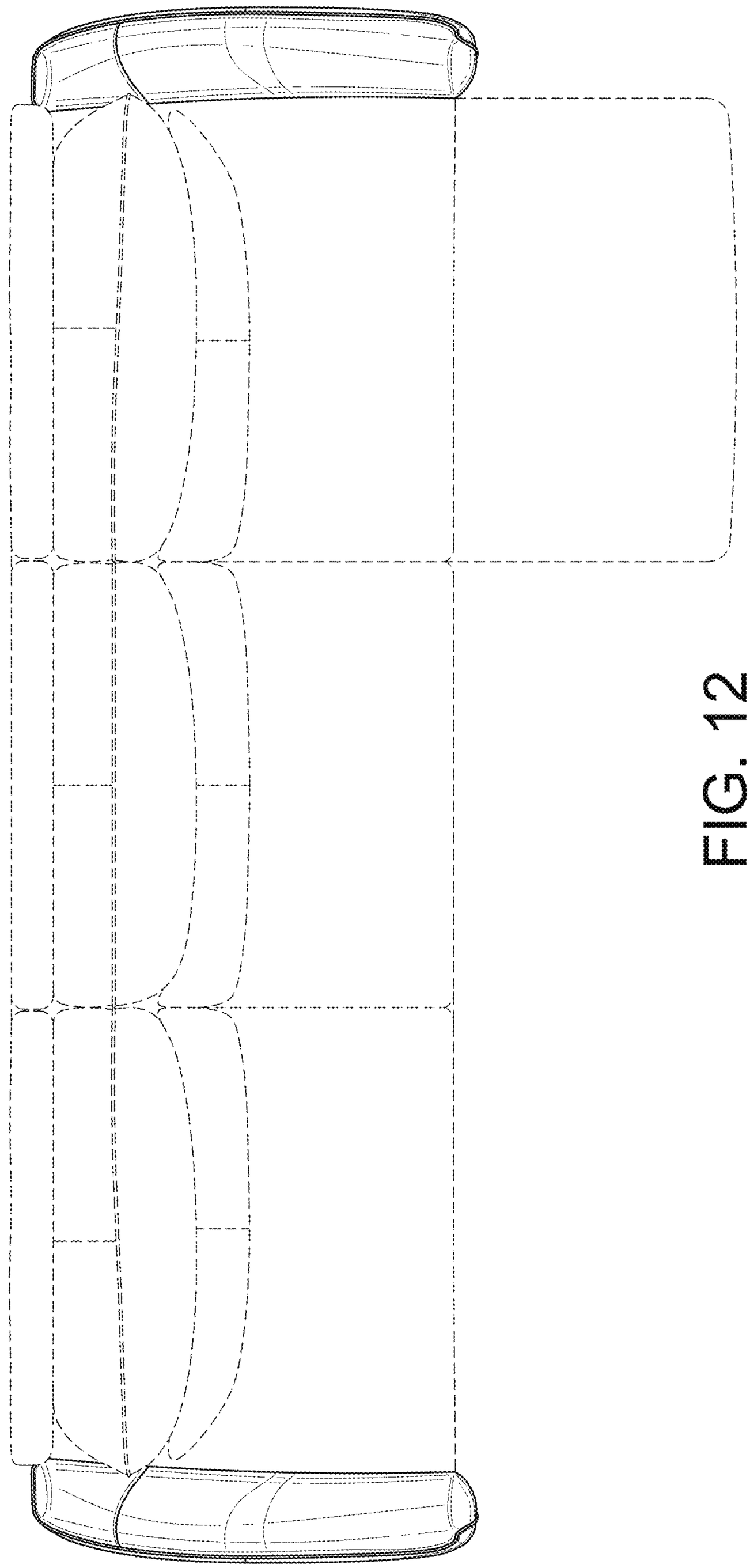

FIG. 12

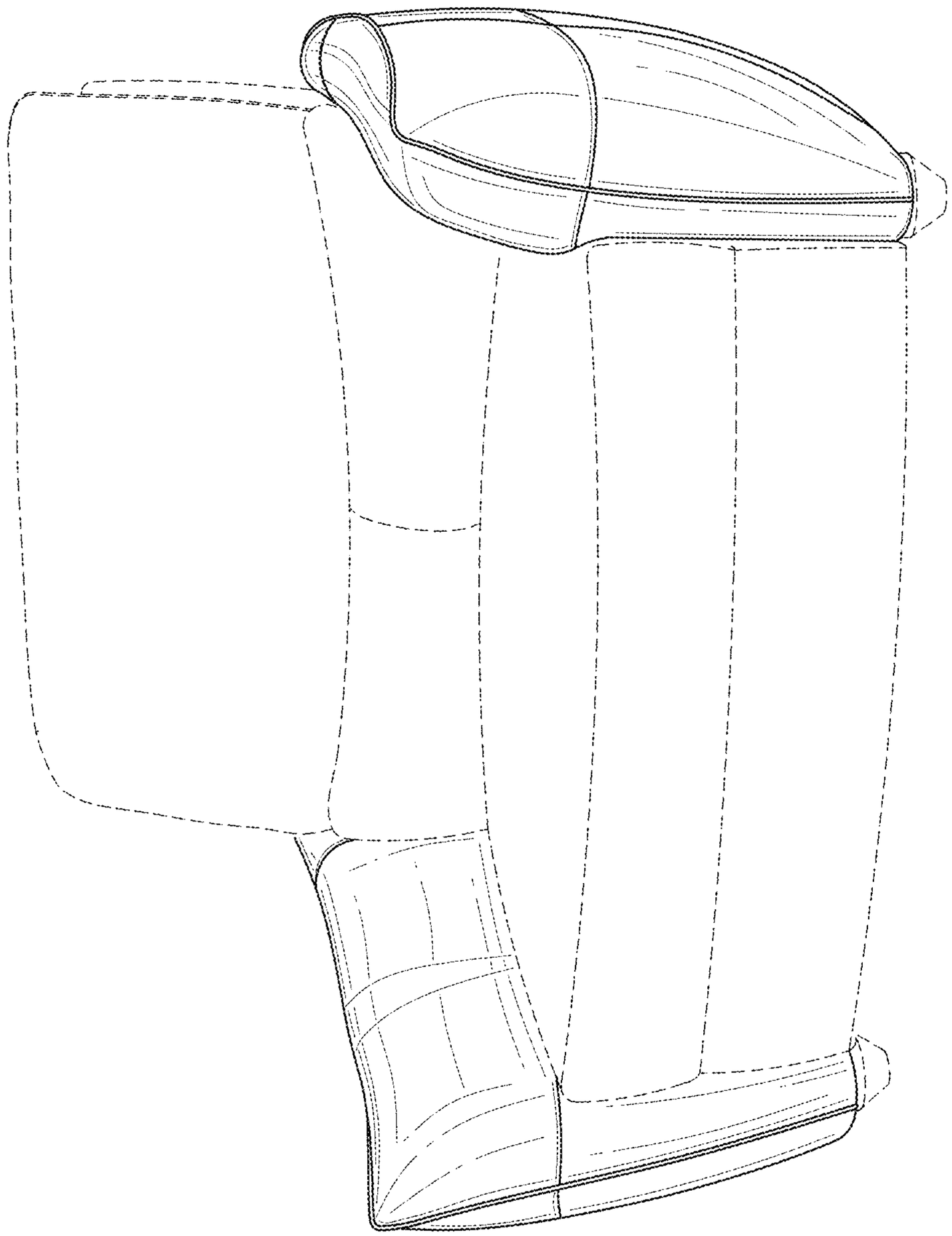

FIG. 13

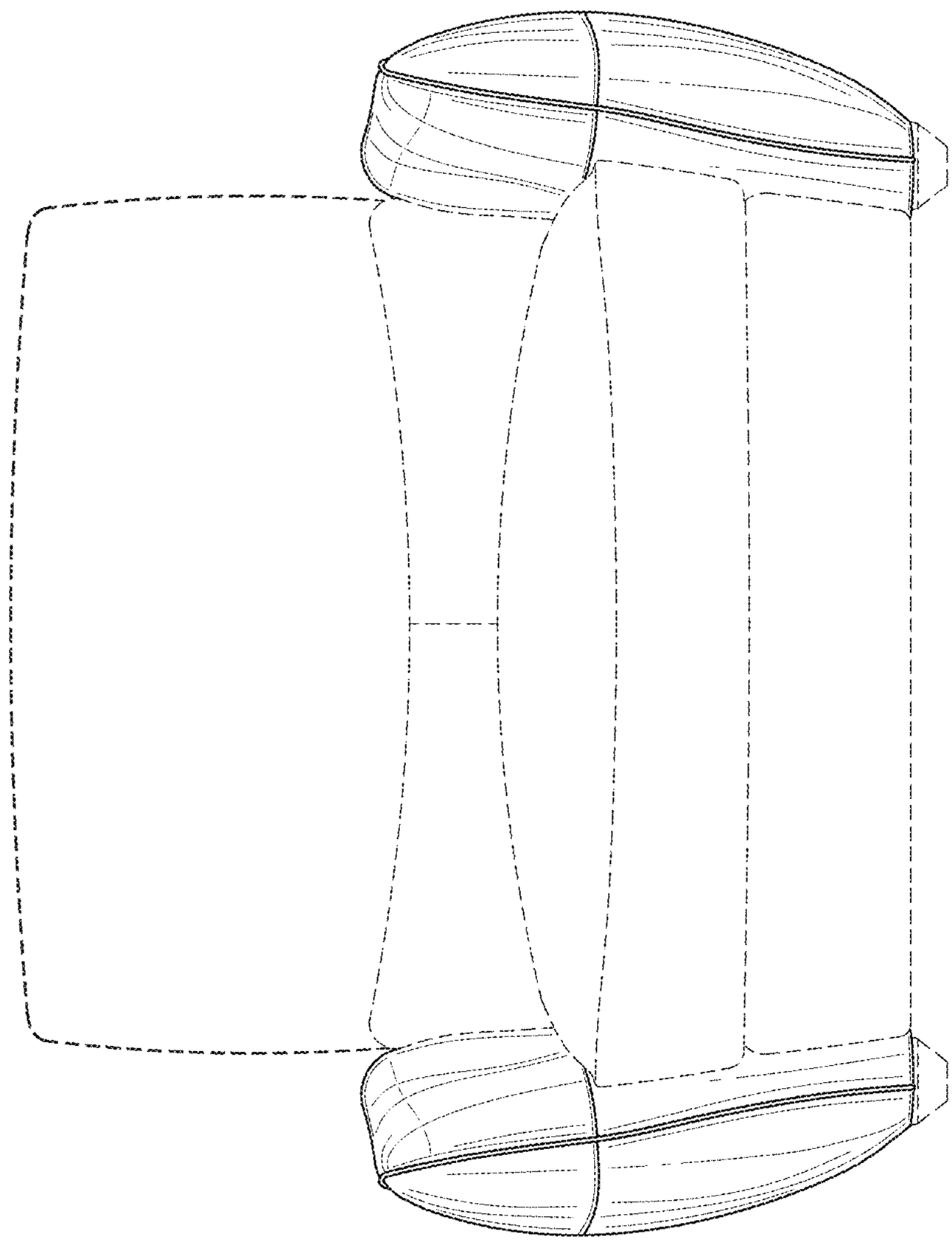

FIG. 14

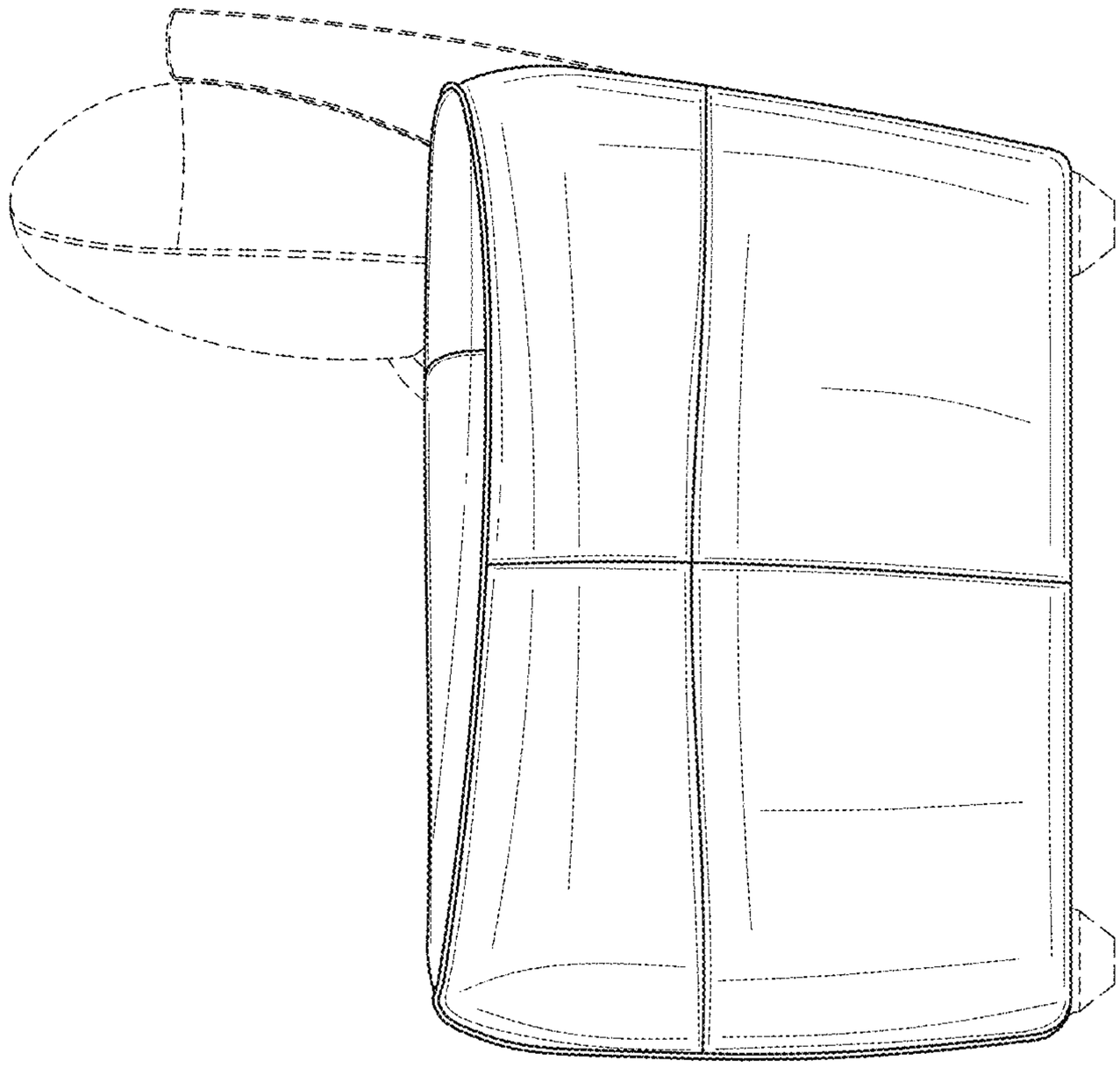

FIG. 16

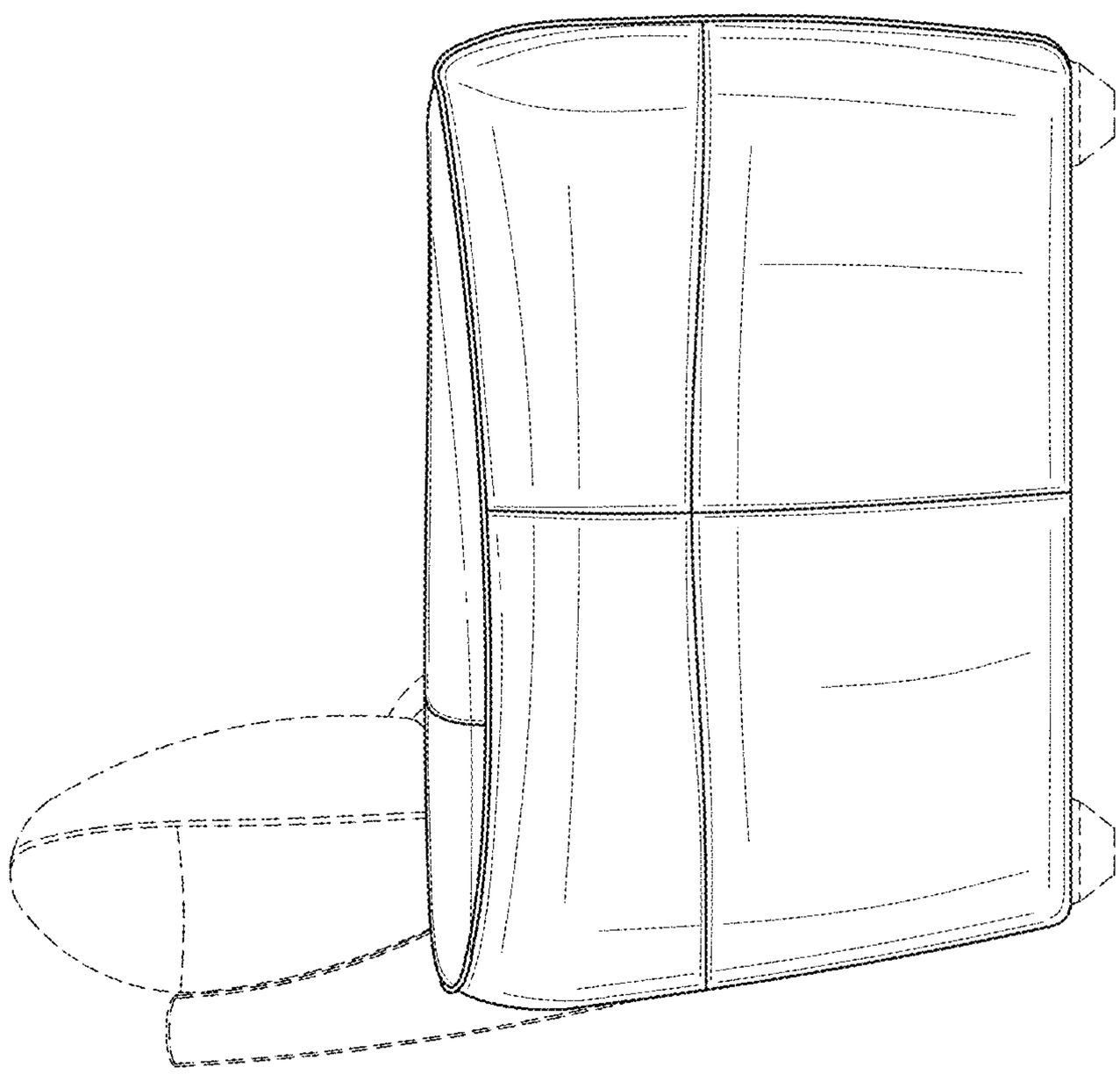

FIG. 15

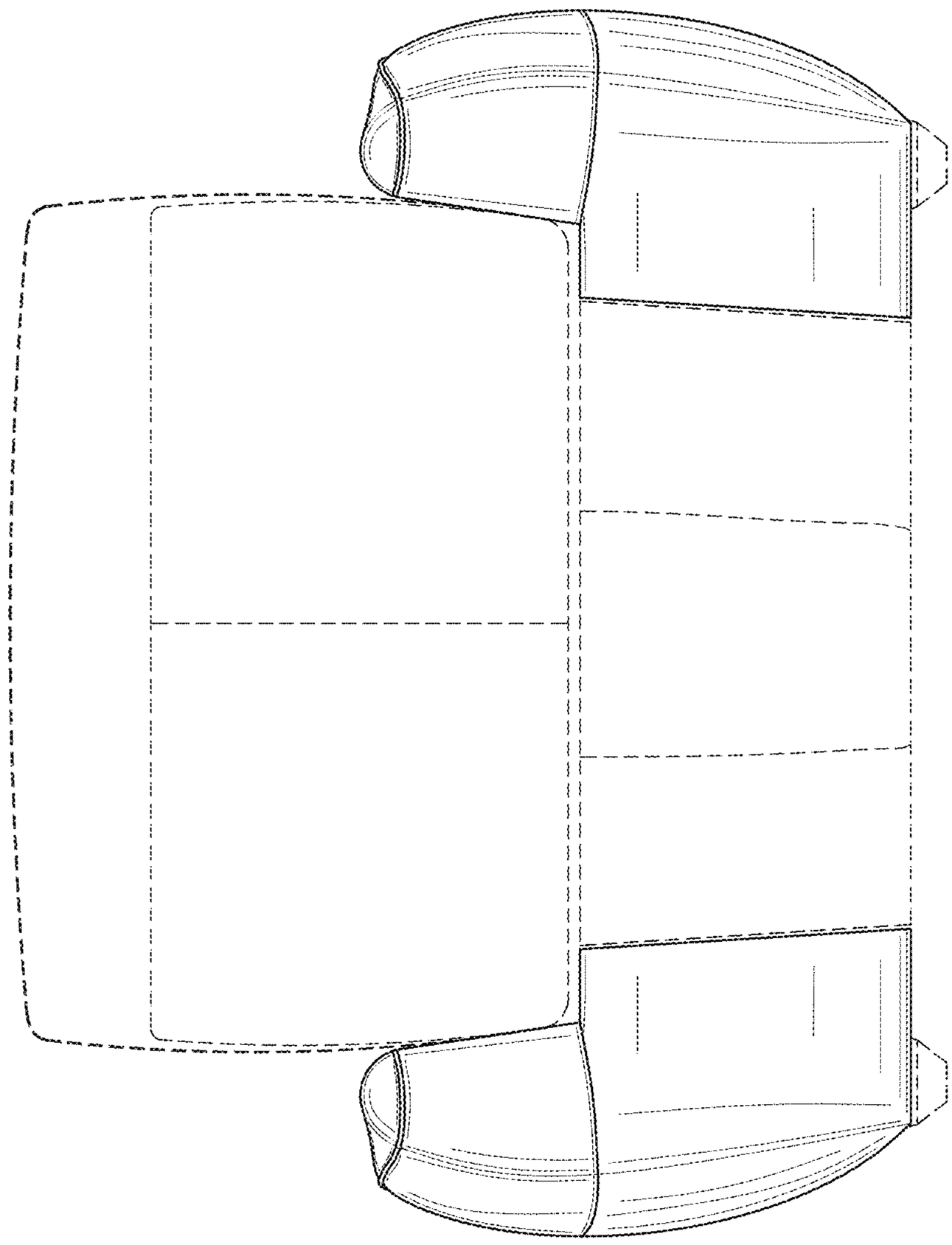

FIG. 17

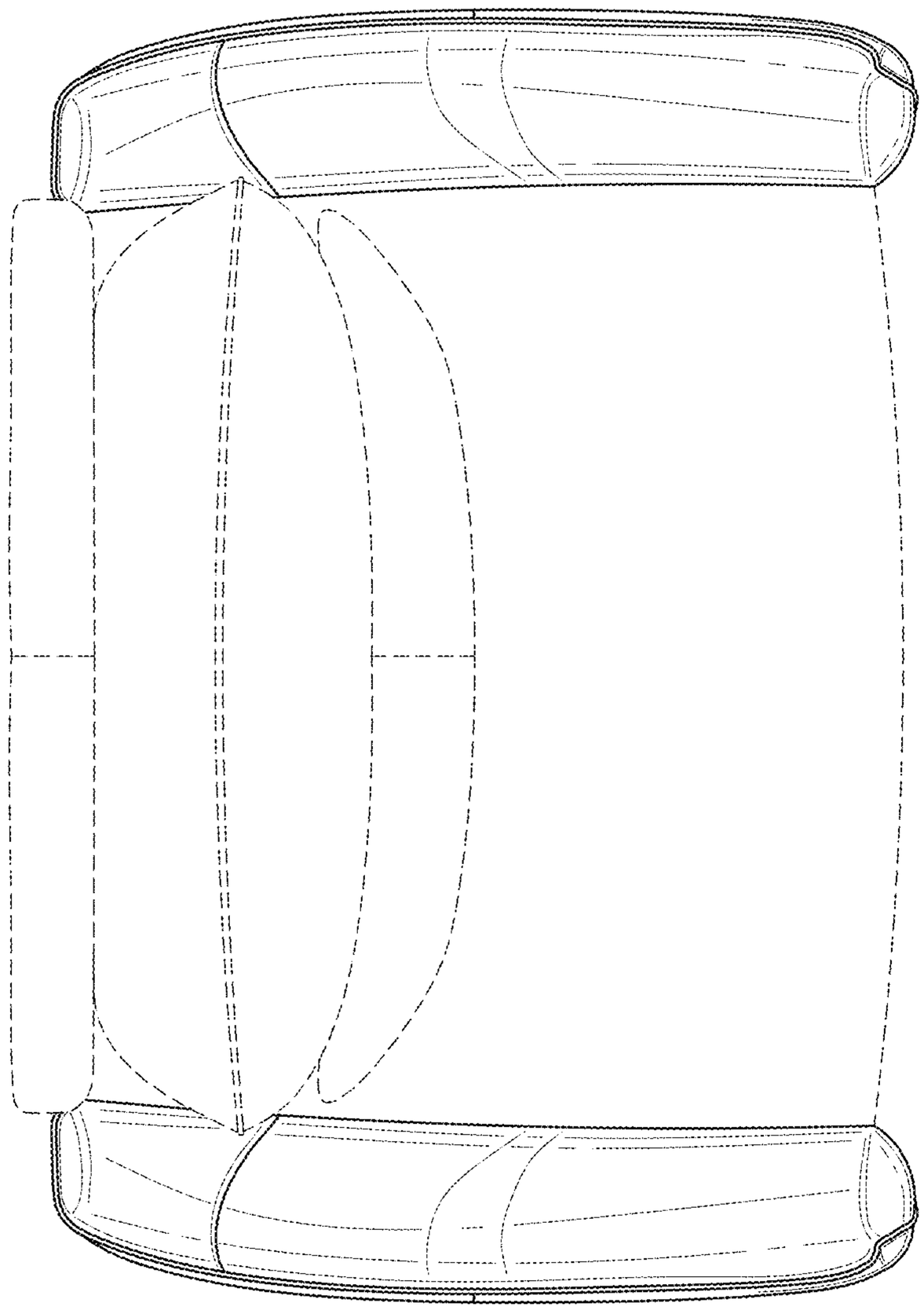

FIG. 18