US00D771022S

(12) United States Design Patent

Miller et al.

(10) Patent No.: US D771,022 S
(45) Date of Patent: ** Nov. 8, 2016

(54) **MICROPHONE CARTRIDGE**

(71) Applicant: **Shure Acquisition Holdings, Inc.**, Niles, IL (US)

(72) Inventors: **John Miller**, Grayslake, IL (US); **Charles S. Argento**, Chicago, IL (US); **John Born**, Park Ridge, IL (US); **John P. Devlin**, Tewksbury, MA (US); **Gabor Paulke**, Littleton, NH (US); **Anthony J. Parillo**, Sherborn, MA (US)

(73) Assignee: **Shure Acquisition Holdings, Inc.**, Niles, IL (US)

(**) Term: **15 Years**

(21) Appl. No.: **29/530,810**

(22) Filed: **Jun. 19, 2015**

(51) **LOC (10) Cl.** **14-01**

(52) **U.S. Cl.**
USPC **D14/228**; D14/225

(58) **Field of Classification Search**
USPC D14/228, 225–227, 229; D13/168; D26/49; D23/262; D15/143; 174/83; 16/2.2, 2.5; 381/361, 355, 357, 358, 381/359, 360, 111, 113, 122, 168, 169, 91; 379/420.03, 433.03; 181/158, 242; 455/95, 155, 117, 128, 129; D11/207, D11/36, 37; 446/416; D21/717, 718, 730, D21/789; 473/387
CPC H04R 5/027; H04R 3/00; H04R 1/34; H04R 25/00; H04B 1/034
See application file for complete search history.

(56) **References Cited**

U.S. PATENT DOCUMENTS

2,118,993 A * 5/1938 Volf H04R 1/083 381/180
D118,575 S * 1/1940 Thomas, Jr. D23/262
D160,293 S * 10/1950 Axel D11/36

(Continued)

FOREIGN PATENT DOCUMENTS

TW D135156 6/2010

OTHER PUBLICATIONS

Search Report for Taiwan Patent Application No. 104306717 dated Mar. 22, 2016.

Primary Examiner — Paula Greene
(74) *Attorney, Agent, or Firm* — William J. Lenz, Esq.; Neal, Gerber & Eisenberg LLP

(57) **CLAIM**

The ornamental design for a microphone cartridge, as shown and described.

DESCRIPTION

FIG. **1** is a first top perspective view of the microphone cartridge of in accordance with a first embodiment;
FIG. **2** is a second top perspective view thereof;
FIG. **3** is a first bottom perspective view thereof;
FIG. **4** is a second bottom perspective view thereof;
FIG. **5** is a first side elevational view thereof, the opposing side being a mirror image of FIG. **5**;
FIG. **6** is a second side elevational view thereof, the opposing side being a mirror image of FIG. **6**;
FIG. **7** is a top plan view thereof;
FIG. **8** is a first top perspective view of the microphone cartridge of in accordance with a second embodiment;
FIG. **9** is a second top perspective view thereof,
FIG. **10** is a first bottom perspective view thereof;
FIG. **11** is a second bottom perspective view thereof;
FIG. **12** is a first side elevational view thereof, the opposing side being a mirror image of FIG. **12**;
FIG. **13** is a second side elevational view thereof, the opposing side being a mirror image of FIG. **13**; and,
FIG. **14** is a top plan view thereof.
The broken lines in the drawings illustrate the portions of the design that form no part of the claim.

1 Claim, 6 Drawing Sheets

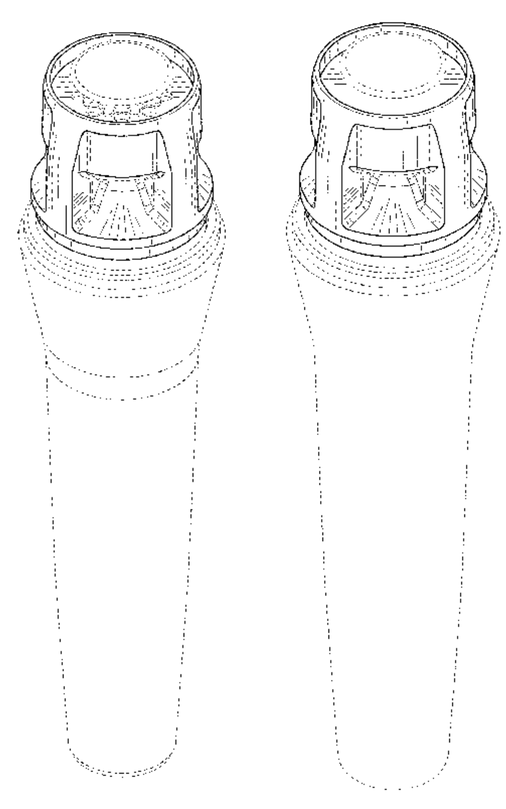

(56) **References Cited**

U.S. PATENT DOCUMENTS

2,567,875 A * 9/1951 Carrington H04R 1/083 181/242
2,700,547 A * 1/1955 Kraeling, Jr. A63B 53/14 40/661.12
D205,403 S * 8/1966 Wilson D14/228
3,265,153 A * 8/1966 Burroughs H04R 1/08 181/158
D209,515 S * 12/1967 Thomsen D14/228
D213,567 S * 3/1969 Kahn D14/228
D218,315 S * 8/1970 Rusch D14/228
3,536,863 A * 10/1970 Schenkel H04R 1/222 381/165
3,718,862 A * 2/1973 Norris H04B 5/06 455/117
D228,193 S * 8/1973 Pruyne D14/228
3,934,100 A * 1/1976 Harada A61B 7/00 181/135
3,944,756 A * 3/1976 Lininger H04R 1/086 381/111
D239,722 S * 4/1976 Schmidt D14/228
D247,707 S * 4/1978 Armstrong D14/228
D253,468 S * 11/1979 Peterson D14/228
D263,163 S * 2/1982 Olde D23/262
4,344,184 A * 8/1982 Edwards H04B 1/04 343/702
4,633,045 A * 12/1986 Bartlett H04R 1/38 381/345
D295,759 S * 5/1988 Kolich D14/226
D296,100 S * 6/1988 Kubota D14/228
D296,435 S * 6/1988 Kubota D14/228
D300,821 S * 4/1989 Kubota D14/228
D300,822 S * 4/1989 Kubota D14/228
D302,819 S * 8/1989 Kubota D14/225
4,910,795 A * 3/1990 McCowen H04R 1/083 381/355
5,357,577 A * 10/1994 Waji H04R 1/04 361/704
5,675,660 A * 10/1997 Townsend H04R 1/086 381/189
5,706,359 A * 1/1998 Chang H04R 1/08 381/355
5,742,697 A * 4/1998 Ching-Chung H04R 1/083 381/355
D407,407 S * 3/1999 Okon D14/228
D444,782 S * 7/2001 Chung D14/228
D473,633 S * 4/2003 Chun-Lee D23/262
6,597,796 B2 * 7/2003 Chang H04R 9/08 338/178
D479,837 S * 9/2003 Sundquist D14/228
D482,151 S * 11/2003 Shiu D26/49
D492,743 S * 7/2004 Boyarko D21/717
D498,232 S * 11/2004 Ruhrig D14/228
D498,865 S * 11/2004 Mah D26/49
D504,678 S * 5/2005 Ruhrig D14/228
D530,705 S * 10/2006 Shen D14/225
D530,706 S * 10/2006 Gustafson D14/228
D531,171 S * 10/2006 Gustafson D14/228
D572,706 S * 7/2008 Schaefer D14/223
D594,856 S * 6/2009 Marshall D14/228
D623,631 S * 9/2010 Kung D14/228
8,588,452 B2 * 11/2013 Matsui H04R 1/086 381/355
D724,685 S * 3/2015 Carroll D21/789
D751,533 S * 3/2016 Godfrey D14/228
2005/0157892 A1 * 7/2005 Chiu H04B 5/06 381/111

* cited by examiner

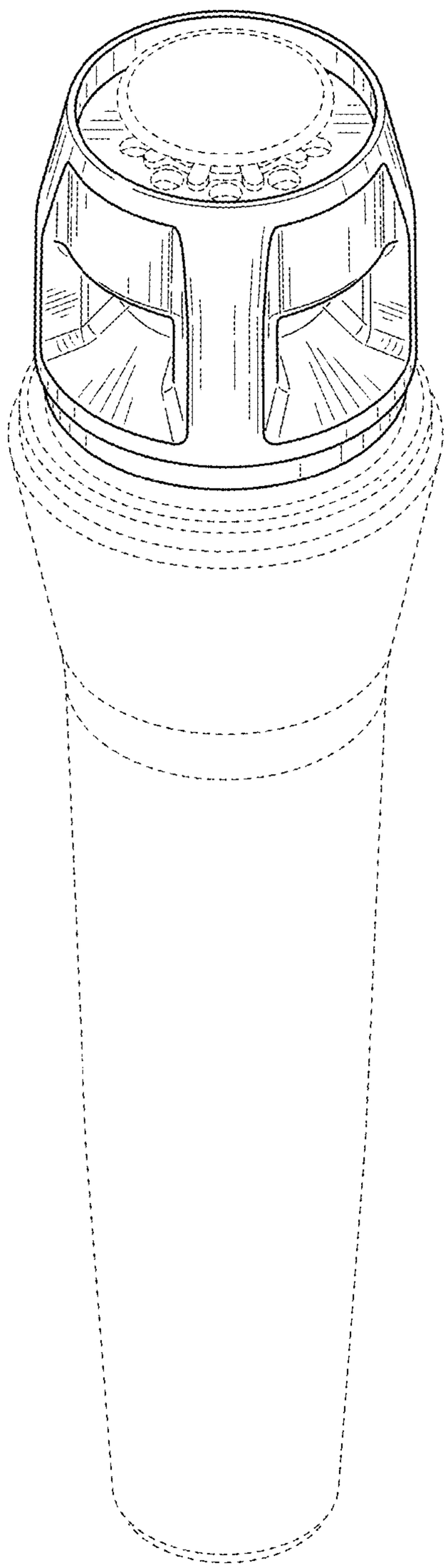

FIG. 1

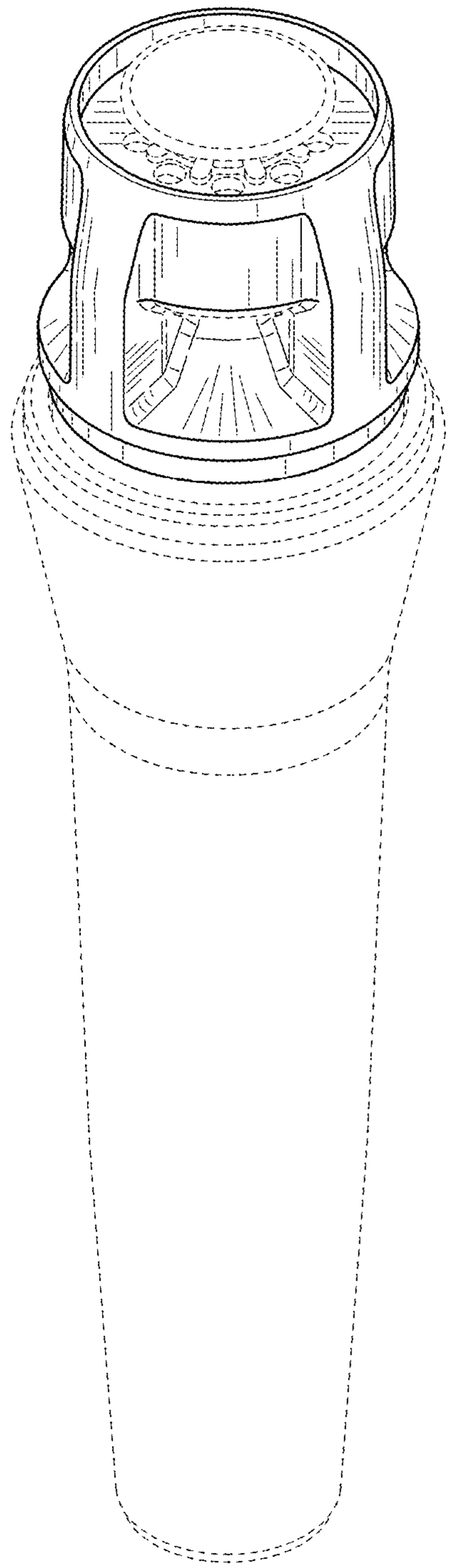

FIG. 2

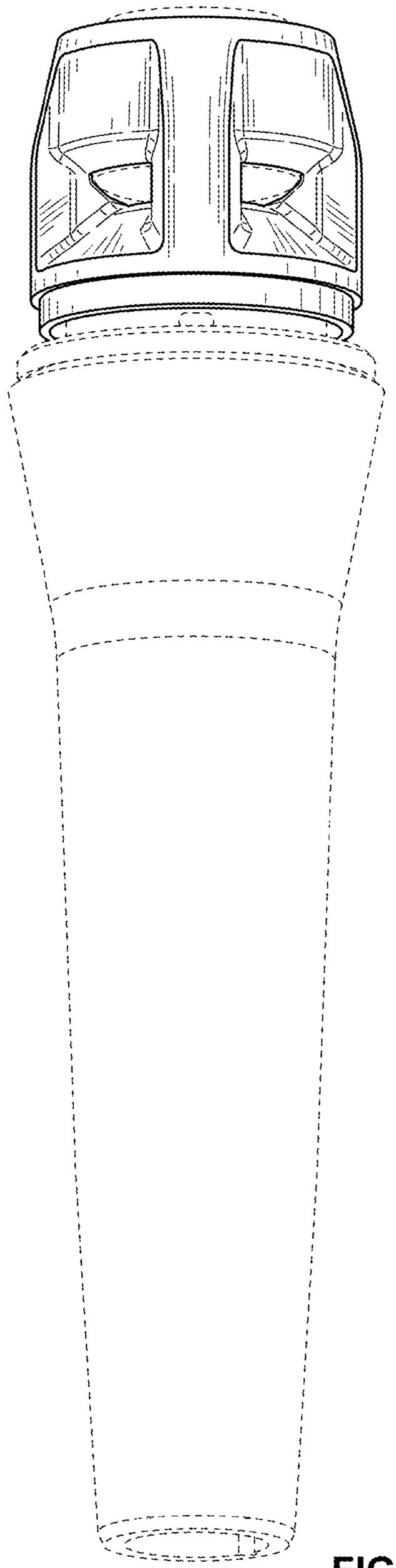

FIG. 3

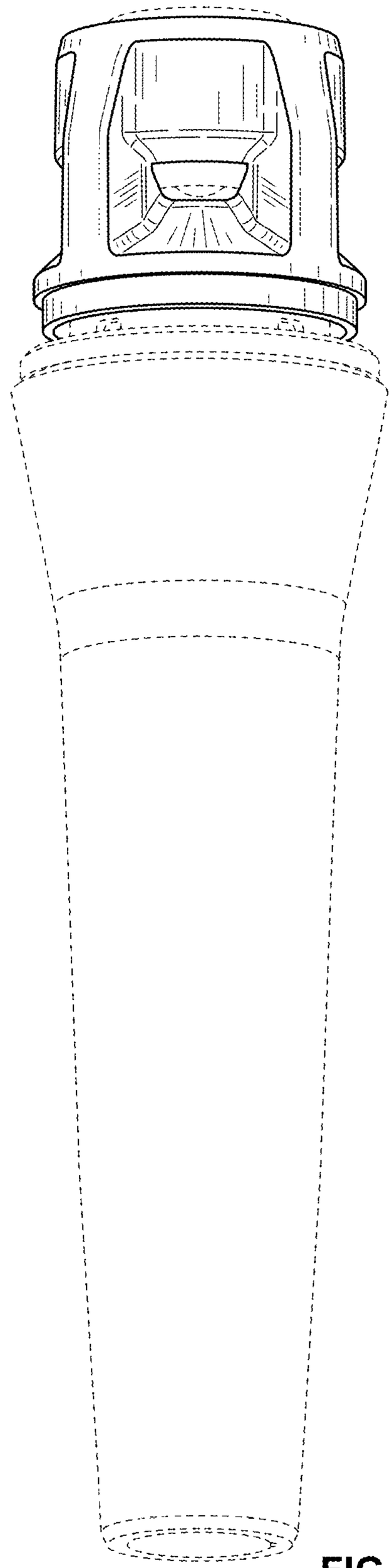

FIG. 4

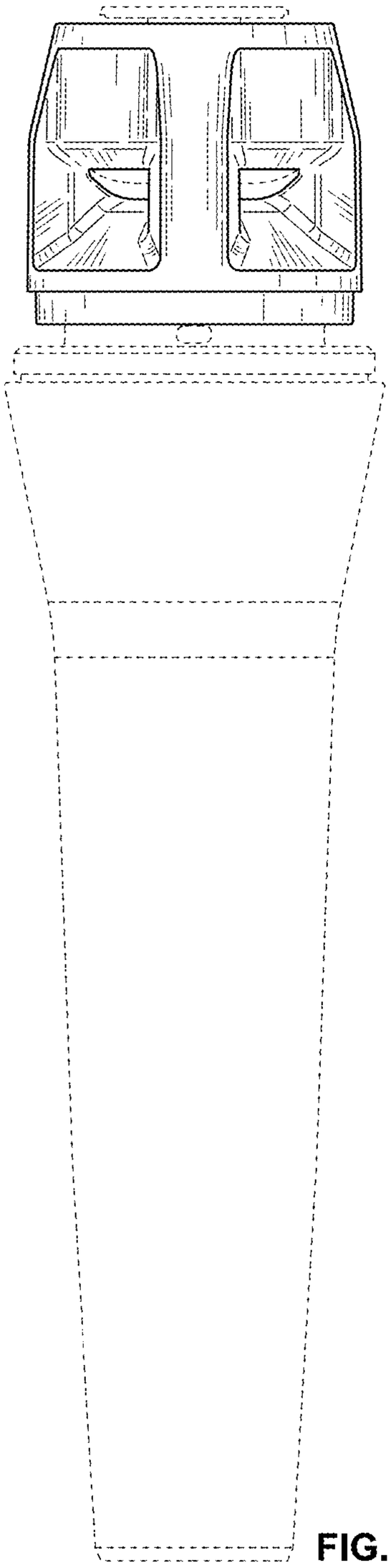

FIG. 5

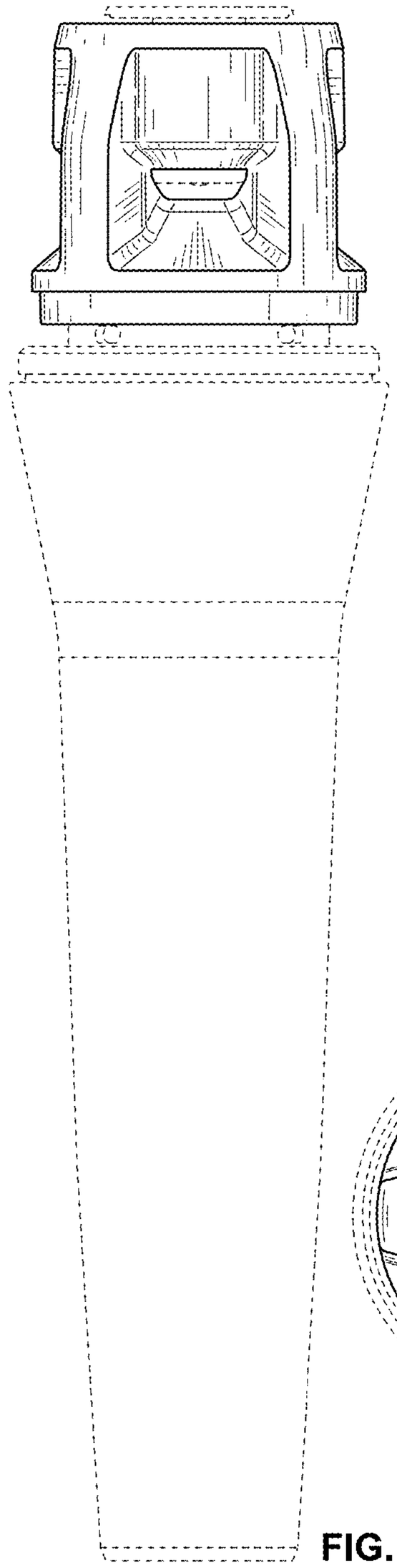

FIG. 6

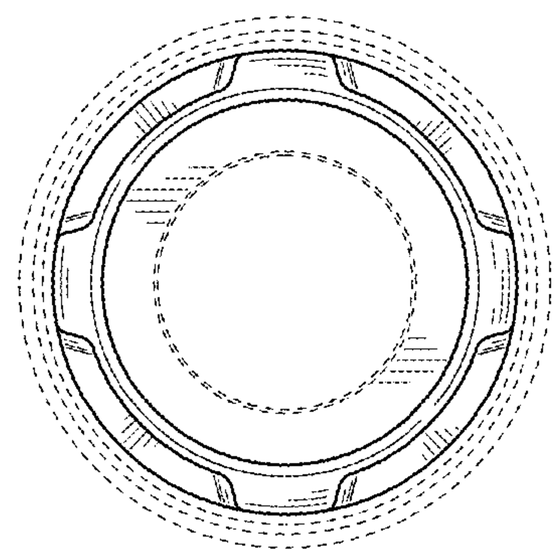

FIG. 7

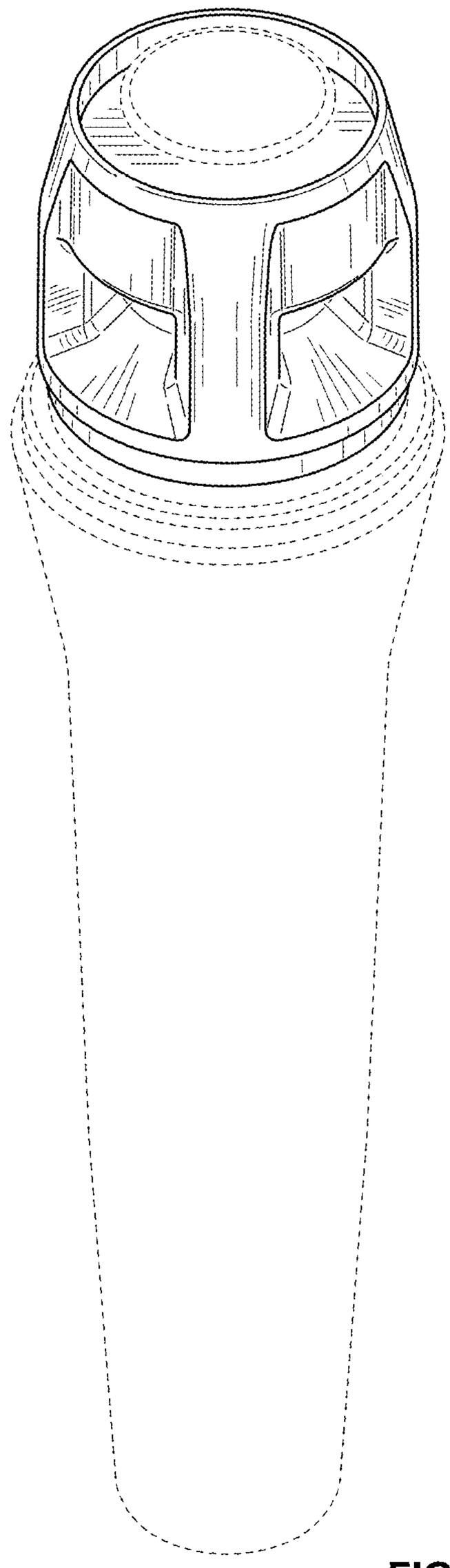

FIG. 8

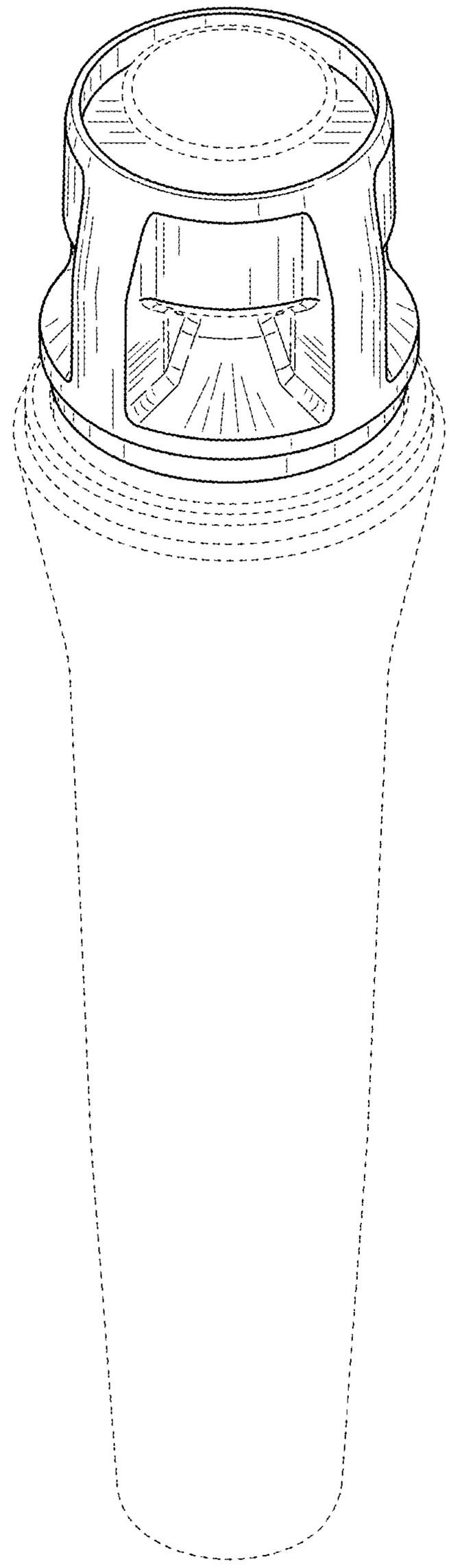

FIG. 9

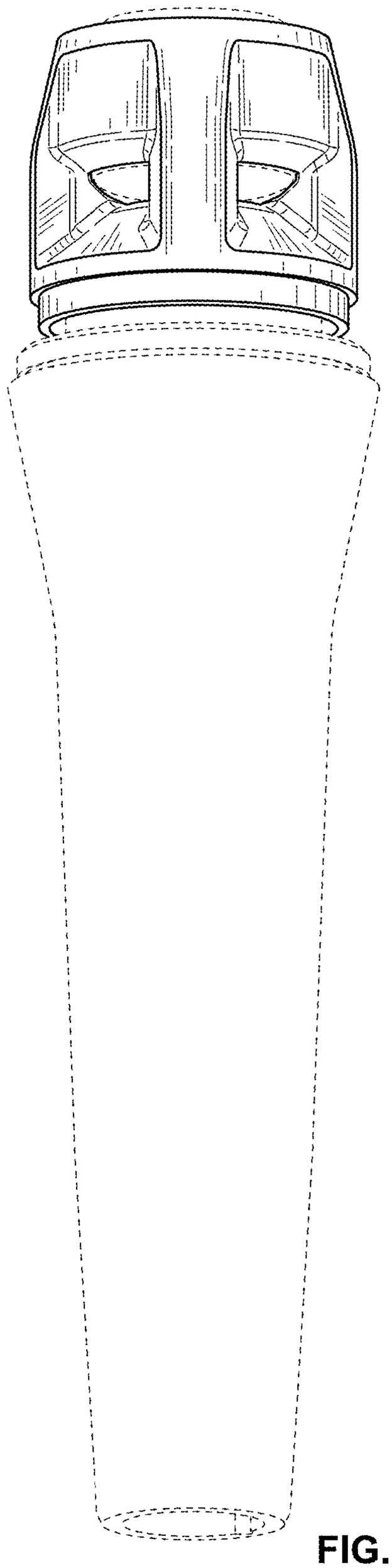

FIG. 10

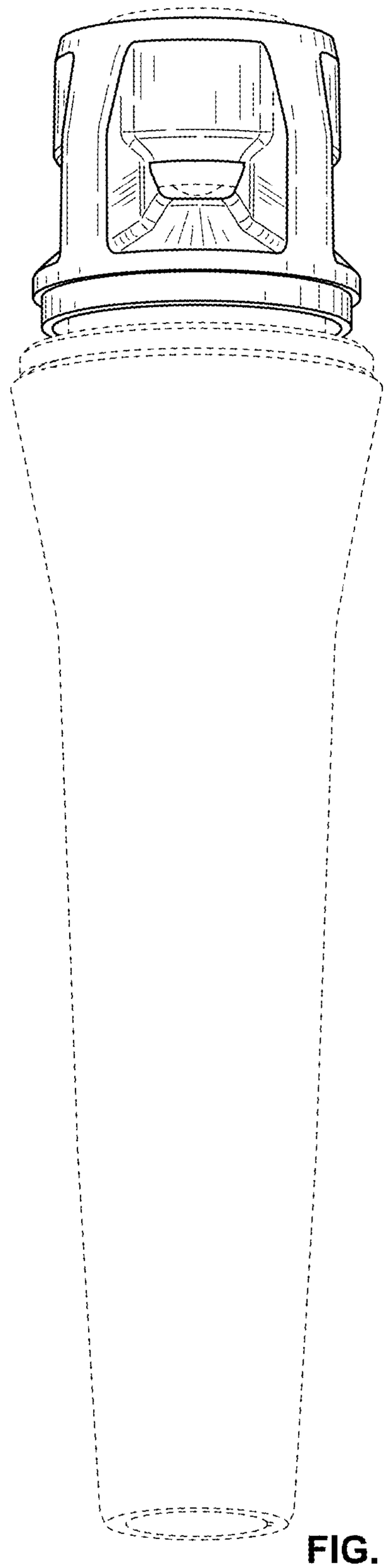

FIG. 11

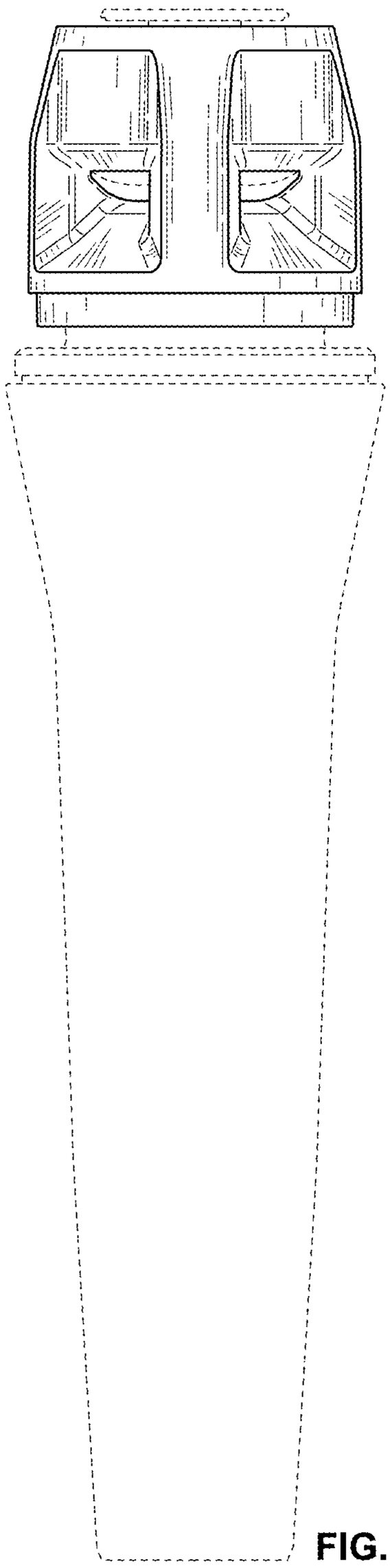

FIG. 12

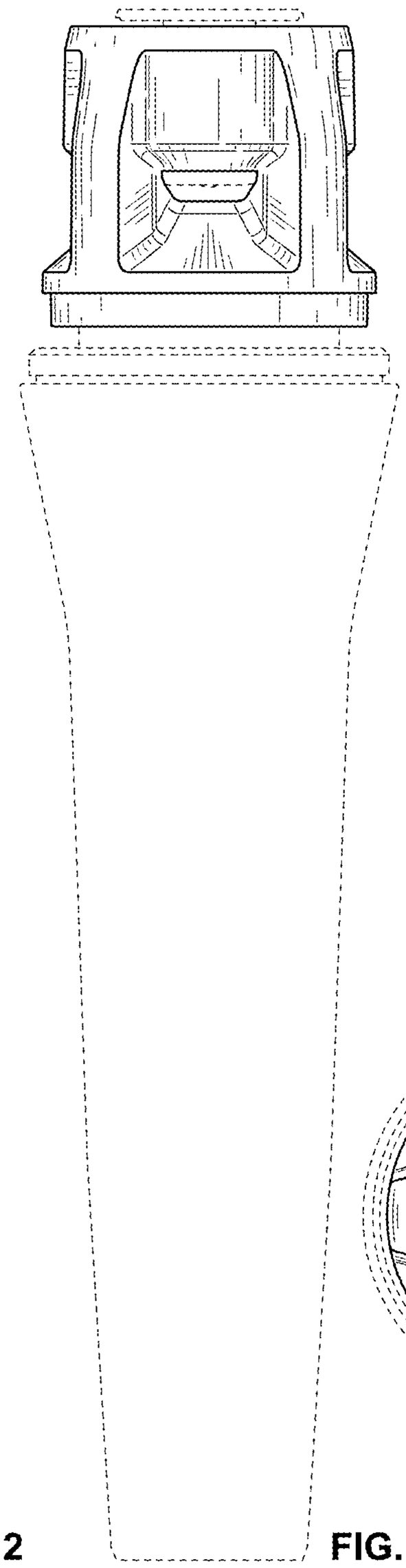

FIG. 13

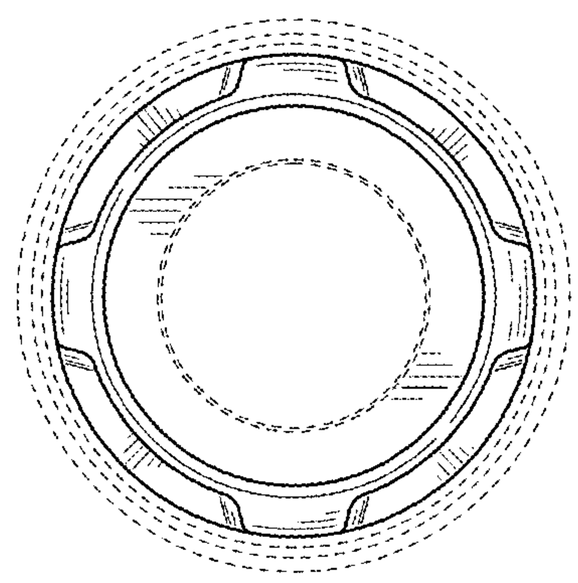

FIG. 14