US00D768350S

(12) United States Design Patent

Gonzalez

(10) Patent No.: US D768,350 S
(45) Date of Patent: ** Oct. 4, 2016

(54) **CASH STORING APPARATUS**

(71) Applicant: **Carlos Andres Gonzalez**, Miami, FL (US)

(72) Inventor: **Carlos Andres Gonzalez**, Miami, FL (US)

(**) Term: **15 Years**

(21) Appl. No.: **29/541,542**

(22) Filed: **Oct. 5, 2015**

(51) **LOC (10) Cl.** **99-00**

(52) **U.S. Cl.**
USPC **D99/34**

(58) **Field of Classification Search**
USPC D99/28, 34, 35, 36, 43, 99; D18/3.1, D18/3.3, 12, 12.1, 46, 47, 49; D14/900, D14/901, 902; D20/1, 2, 4, 5, 6, 8, 9
CPC G07F 9/06; G07F 9/04; G07F 9/08; G07F 11/00; G07F 11/002; G07F 19/00; G07F 1/00; G07F 1/02; G07F 1/04; G07F 3/00; G07F 3/04; G07F 7/00; G07F 7/005; G07F 7/04; G07F 11/62; A47F 1/08; G07D 1/00; G07D 1/02; G07D 1/04; G07D 1/06; G07D 1/08; G07D 3/00; G07D 3/02; G07D 3/12; G07D 3/14; G07D 3/16; G07D 9/00; G07D 9/002; G07D 9/004; G07D 9/006; G07D 9/008; G07D 9/02; G07D 9/04; G07D 11/00; G07D 11/0021; G07D 11/0087; G07D 11/009; G07D 11/0093; G07D 13/00; G07D 2201/00
See application file for complete search history.

(56) **References Cited**

U.S. PATENT DOCUMENTS

D96,304	S	*	7/1935	Farber	D99/35
D103,605	S	*	3/1937	Zell	D99/35
D200,038	S	*	1/1965	Wilmer	D3/249
D279,577	S	*	7/1985	Kajita	D18/3.3
D281,368	S	*	11/1985	Catelli	D99/35
D282,307	S	*	1/1986	Nishida	D18/3.3
D285,858	S	*	9/1986	Ooki	D99/28
D335,149	S	*	4/1993	Dabrowski	D20/1
D343,717	S	*	1/1994	Nakajima	D99/34
D371,887	S	*	7/1996	Minagawa	D99/28
D448,040	S	*	9/2001	Forslund	D18/3.1
D477,902	S	*	7/2003	Bergeron	D18/3.3
D483,057	S	*	12/2003	Bergeron	D18/3.3
D523,468	S	*	6/2006	Umeda	D18/3.1
D540,391	S	*	4/2007	Irie	D20/9
D574,125	S	*	7/2008	Gunst	D99/28
D663,765	S	*	7/2012	Bleck	D18/3.3
D669,525	S	*	10/2012	Bleck	D18/3.3
D671,164	S	*	11/2012	Bleck	D18/3.3
D719,315	S	*	12/2014	Berger	D99/28
D724,813	S	*	3/2015	Umeda	D99/34
D725,865	S	*	3/2015	Cho	D99/28
2006/0175176	A1	*	8/2006	Blake	G07D 9/00 194/216
2007/0051582	A1	*	3/2007	Bochonok	G07D 1/02 194/202

* cited by examiner

Primary Examiner — Elizabeth J Oswecki
(74) *Attorney, Agent, or Firm* — Albert Bordas, P.A.

(57) **CLAIM**

The ornamental design for a cash storing apparatus, as shown and described.

DESCRIPTION

FIG. **1** is a top plan view of a cash storing apparatus showing my new design;
FIG. **2** is a front elevational view thereof;
FIG. **3** is a rear elevational view thereof;
FIG. **4** is a bottom plan view thereof;
FIG. **5** is a left side elevational view thereof, the right side elevational view being a mirror image thereof; and,
FIG. **6** is an isometric view thereof.
The broken lines are for environmental purposes only and form no part of the claimed design.

1 Claim, 4 Drawing Sheets

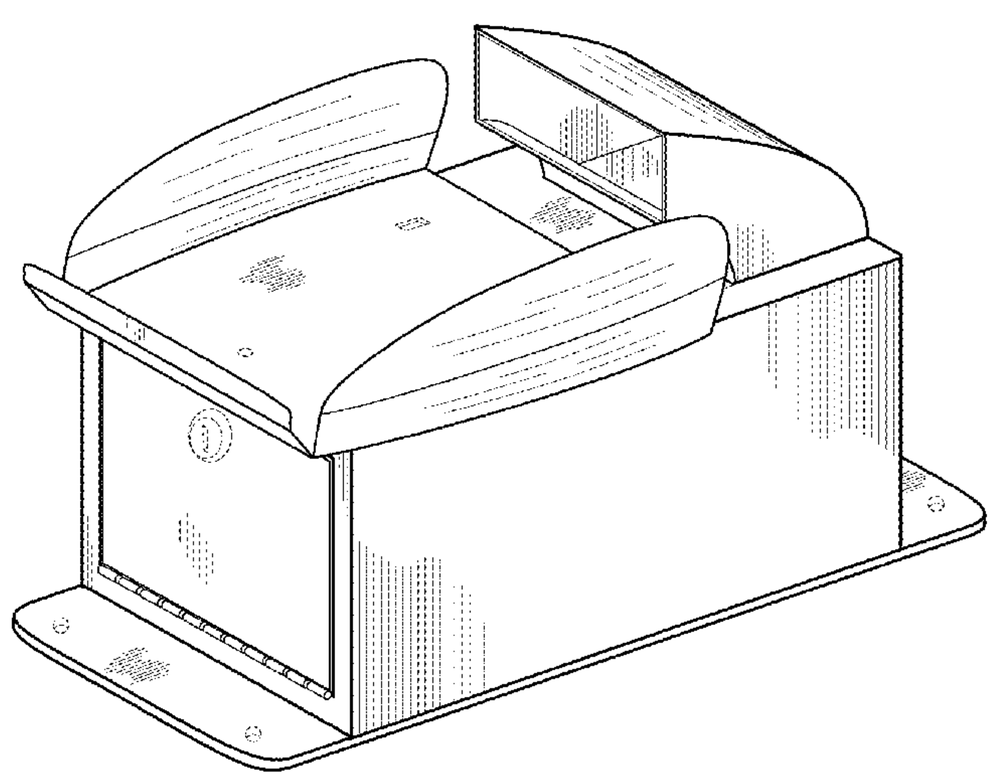

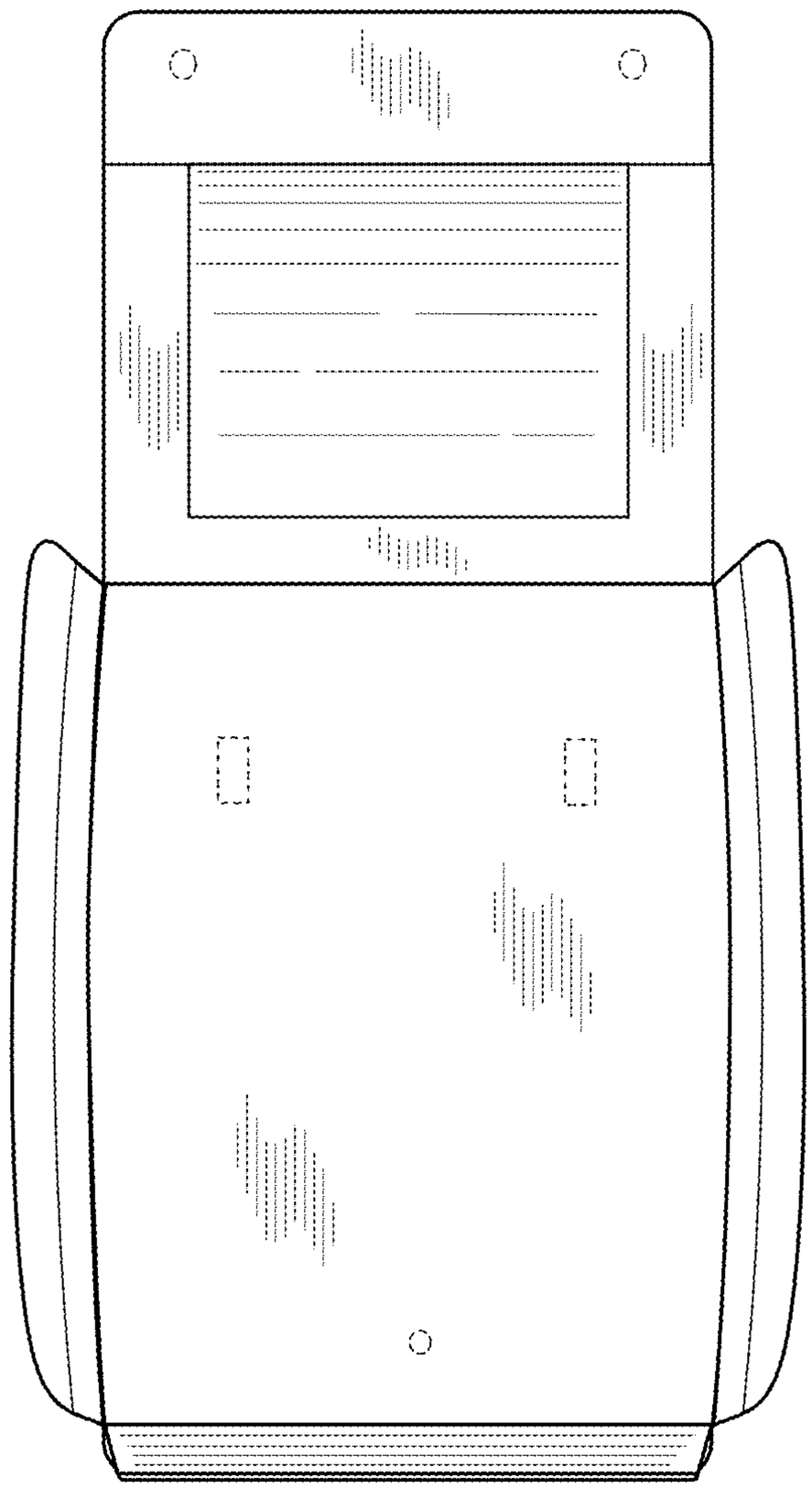

Fig. 1

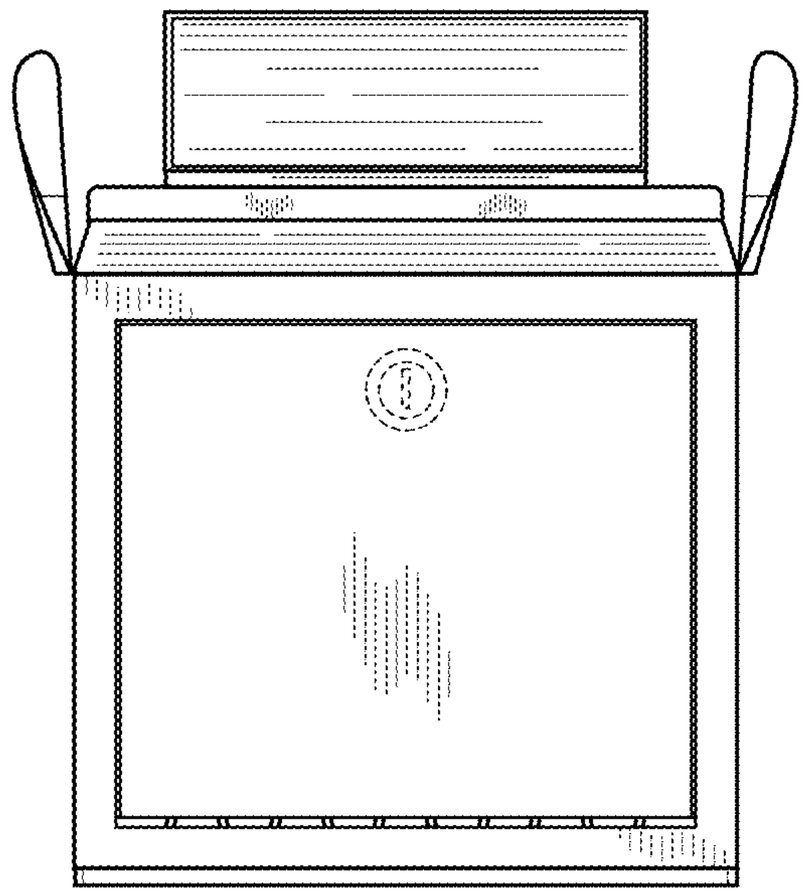

Fig. 2

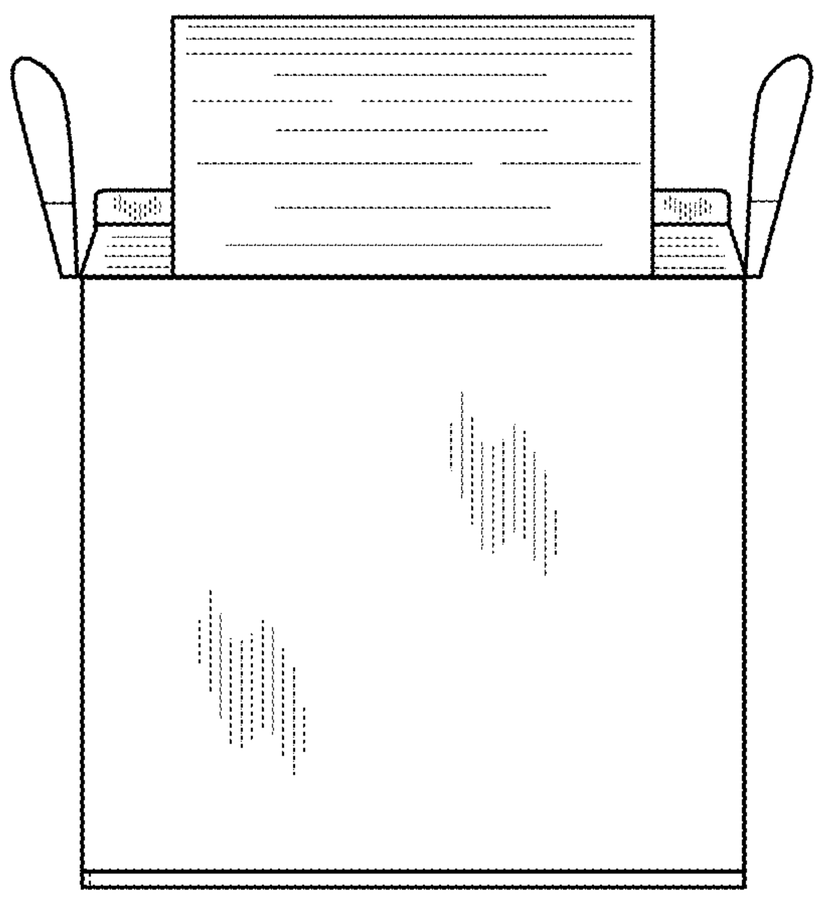

Fig. 3

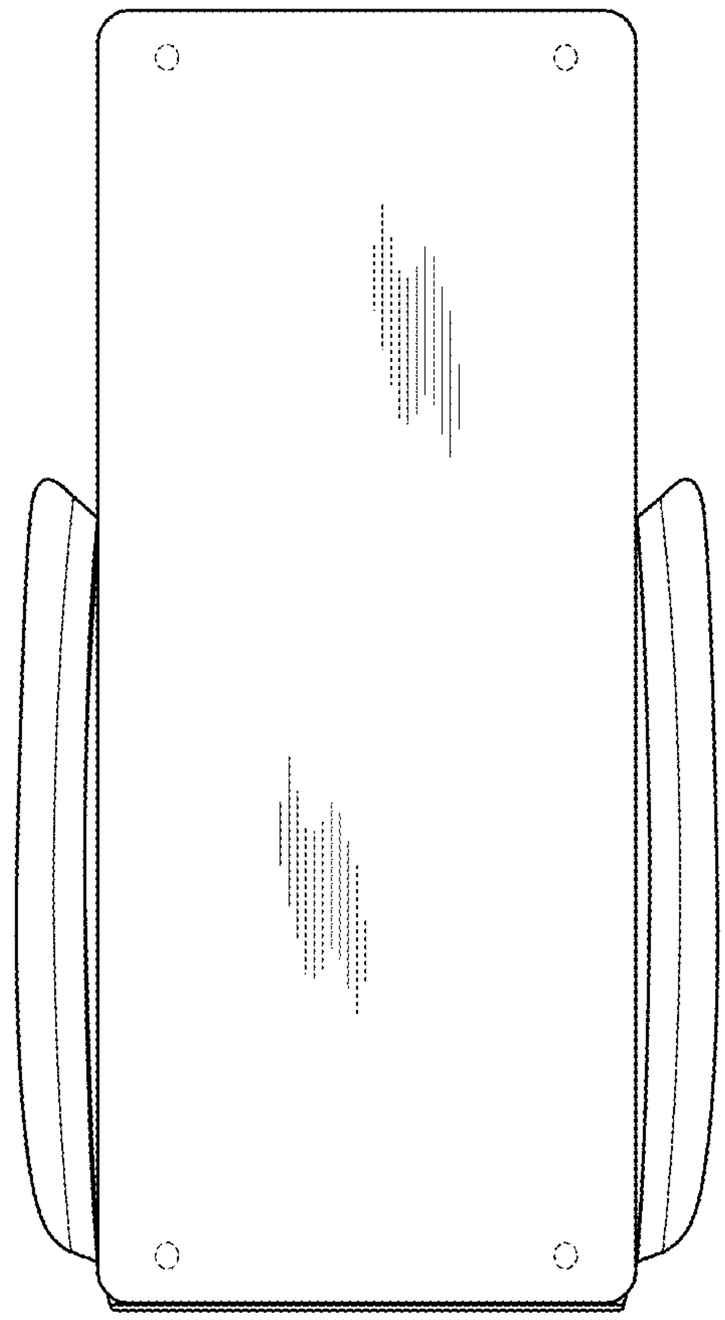

Fig. 4

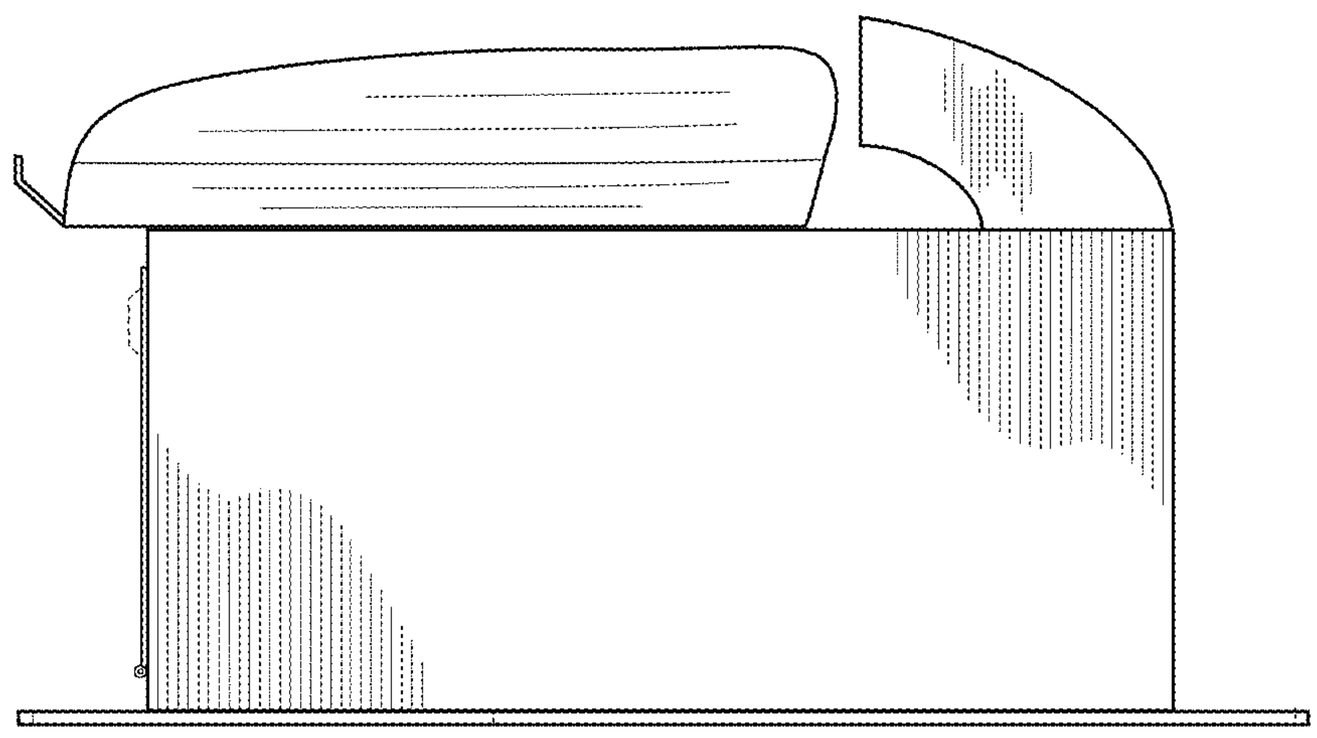

Fig. 5

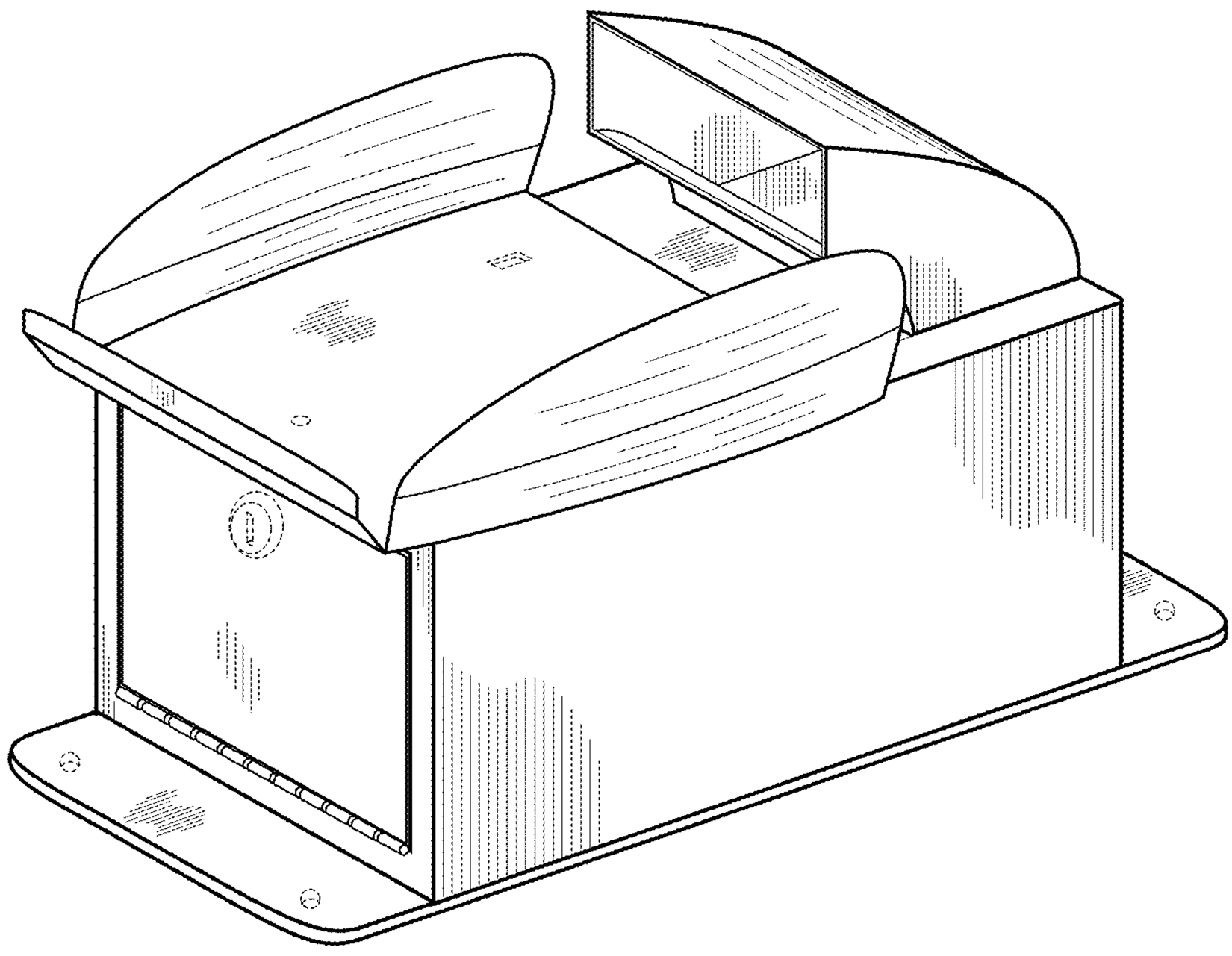

Fig. 6