US00D767810S

(12) United States Design Patent

Li

(10) Patent No.: US D767,810 S
(45) Date of Patent: ** Sep. 27, 2016

(54) **ELECTRONIC FLAMELESS CANDLE**

(71) Applicant: **Xiaofeng Li**, Shenzhen (CN)

(72) Inventor: **Xiaofeng Li**, Shenzhen (CN)

(**) Term: **14 Years**

(21) Appl. No.: **29/492,072**

(22) Filed: **May 28, 2014**

(51) **LOC (10) Cl.** **26-03**

(52) **U.S. Cl.**
USPC **D26/96**

(58) **Field of Classification Search**
USPC D26/96, 4–7, 9; 362/392, 810, 161, 183
CPC F21S 10/04; F21S 9/02; F21K 9/58; A61L 9/03; A61L 2209/12; F21V 23/0442; F21W 2121/00
See application file for complete search history.

(56) **References Cited**

U.S. PATENT DOCUMENTS

3,315,497	A *	4/1967	MacDonald	F23Q 2/32 362/161
D301,749	S *	6/1989	Comstock	D26/9
D488,582	S *	4/2004	Connelly	D26/96
D490,547	S *	5/2004	Clarkson	D26/9
6,785,939	B1 *	9/2004	James	A61G 17/08 27/1
8,002,429	B2 *	8/2011	Ambroggio	C11C 5/008 362/154
8,215,789	B2 *	7/2012	Howard	F21S 19/00 362/157
8,556,476	B2 *	10/2013	Ding	F21S 6/001 362/161
8,783,888	B2 *	7/2014	McCavit	A61L 9/122 362/162
8,956,001	B2 *	2/2015	Ng	F21L 27/00 362/161
9,039,233	B2 *	5/2015	Fournier	F21V 33/0056 362/202
9,080,762	B2 *	7/2015	Ray	F21V 33/00
D739,069	S *	9/2015	Bologeorges	D26/13
2006/0120080	A1	6/2006	Sipinski et al.	
2009/0059596	A1	3/2009	Lederer	
2011/0317403	A1	12/2011	Fournier et al.	

FOREIGN PATENT DOCUMENTS

CN	1530142	9/2004
CN	1646177	7/2005
CN	200940808	8/2007
CN	201235095	5/2009
CN	201418887	3/2010
CN	201533921	7/2010
CN	201643048	11/2010
EP	0855189	7/1998
JP	1057464	3/1998
WO	03011349	2/2003
WO	2013020263	2/2013

OTHER PUBLICATIONS

Translation of CN200940808 provided via Third-Party Submission filed on Mar. 19, 2015 in related U.S. Appl. No. 14/297,862 (11 pages).

* cited by examiner

Primary Examiner — David Muller
(74) *Attorney, Agent, or Firm* — Perkins Coie LLP

(57) **CLAIM**

The ornamental design for an electronic flameless candle, as shown and described.

DESCRIPTION

FIG. **1** is a top perspective view of the electronic flameless candle;
FIG. **2** is a front elevation view thereof;
FIG. **3** is a rear elevation view thereof;
FIG. **4** is a right side elevation view thereof;
FIG. **5** is a left side elevation view thereof;
FIG. **6** is a top plan view thereof; and,
FIG. **7** is a bottom plan view.
The features shown in broken lines depict environmental structure only and form no part of the claimed design.

1 Claim, 7 Drawing Sheets

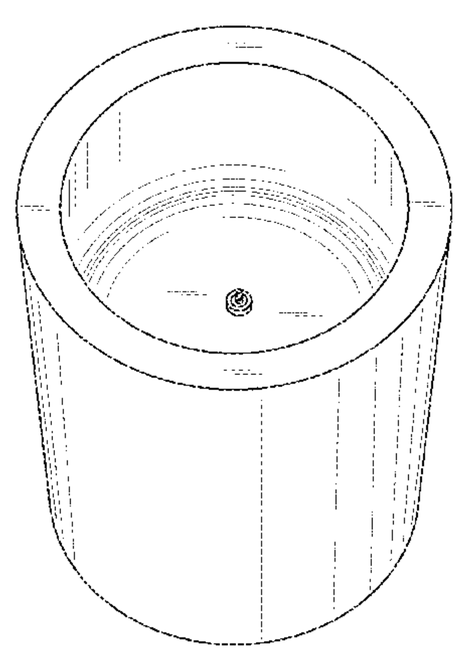

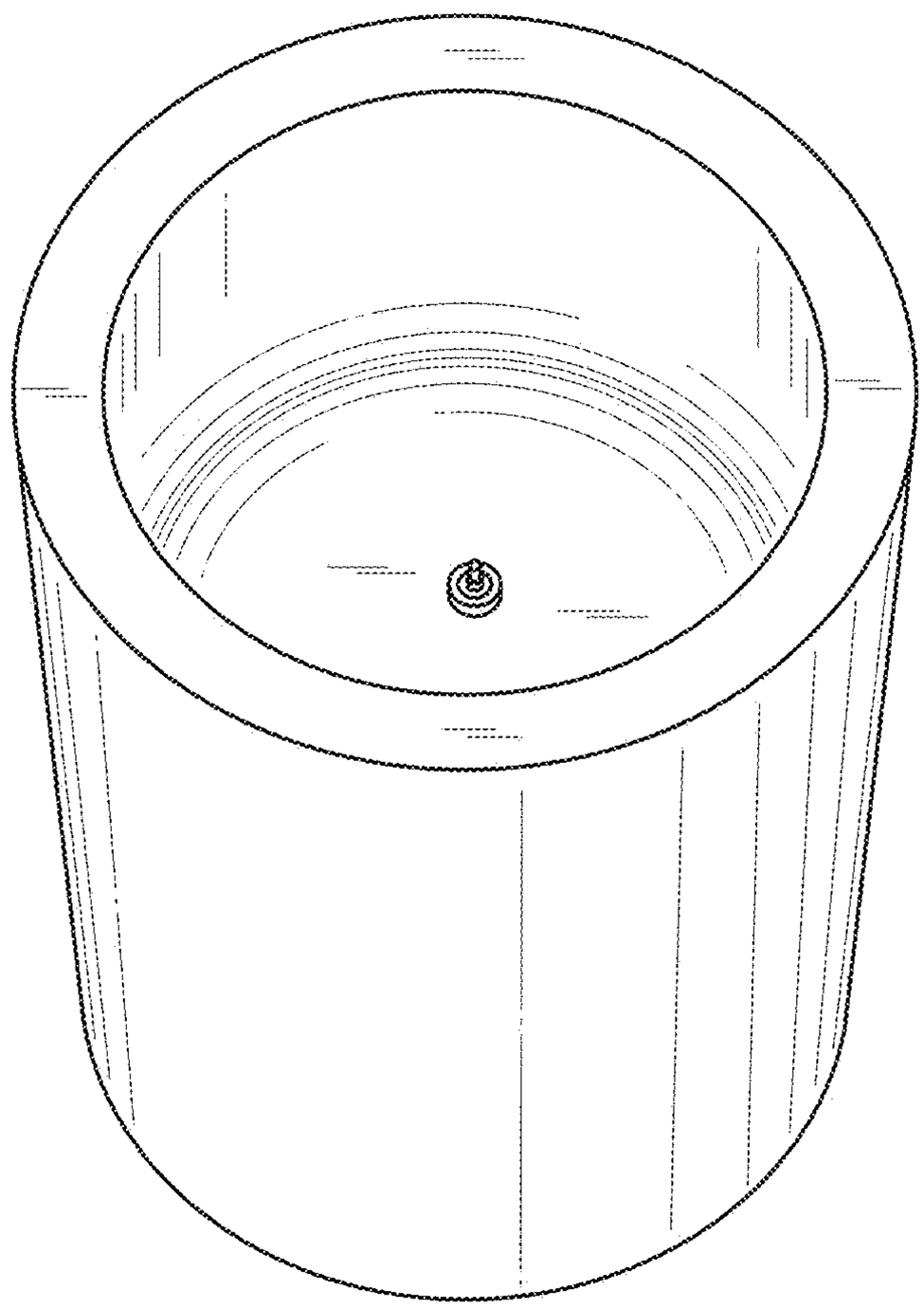

Fig. 1

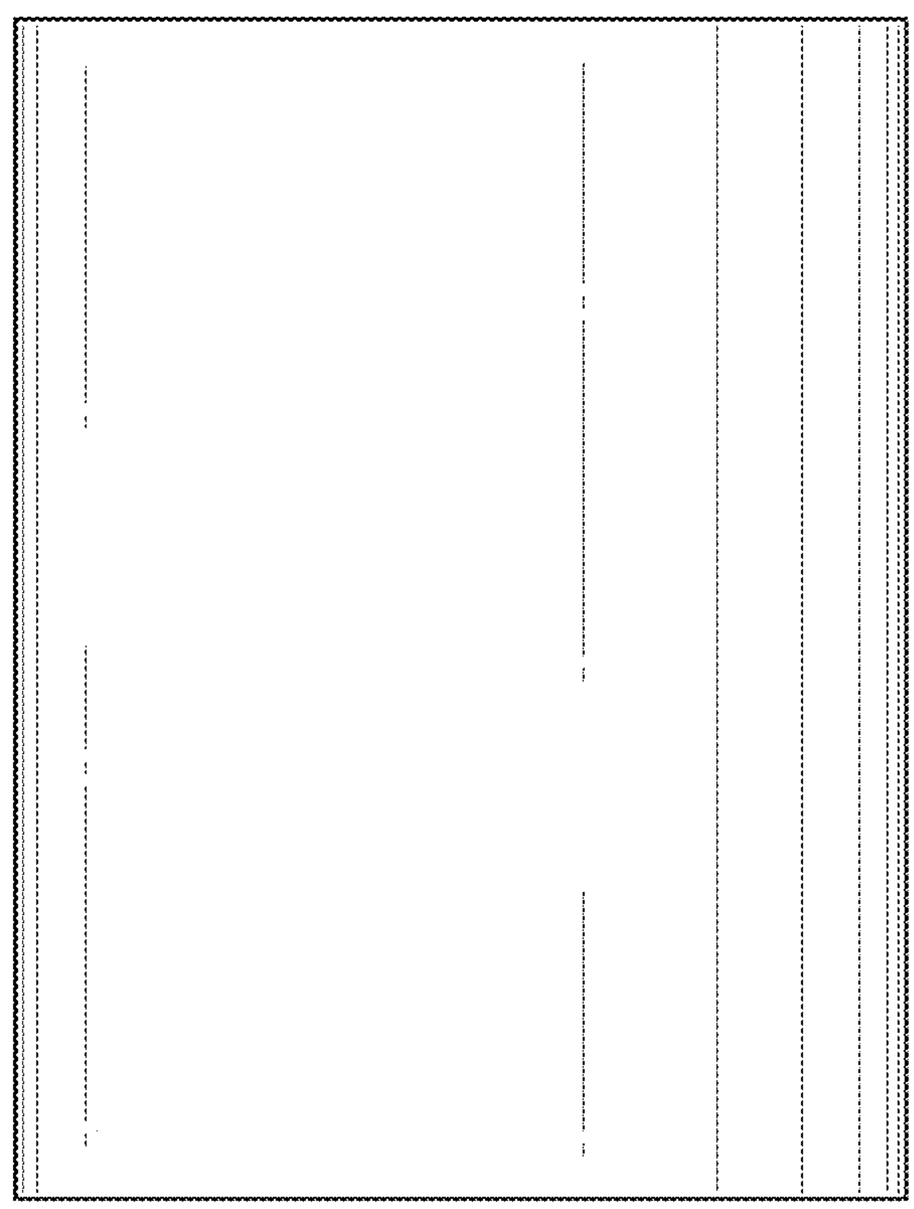

Fig. 2

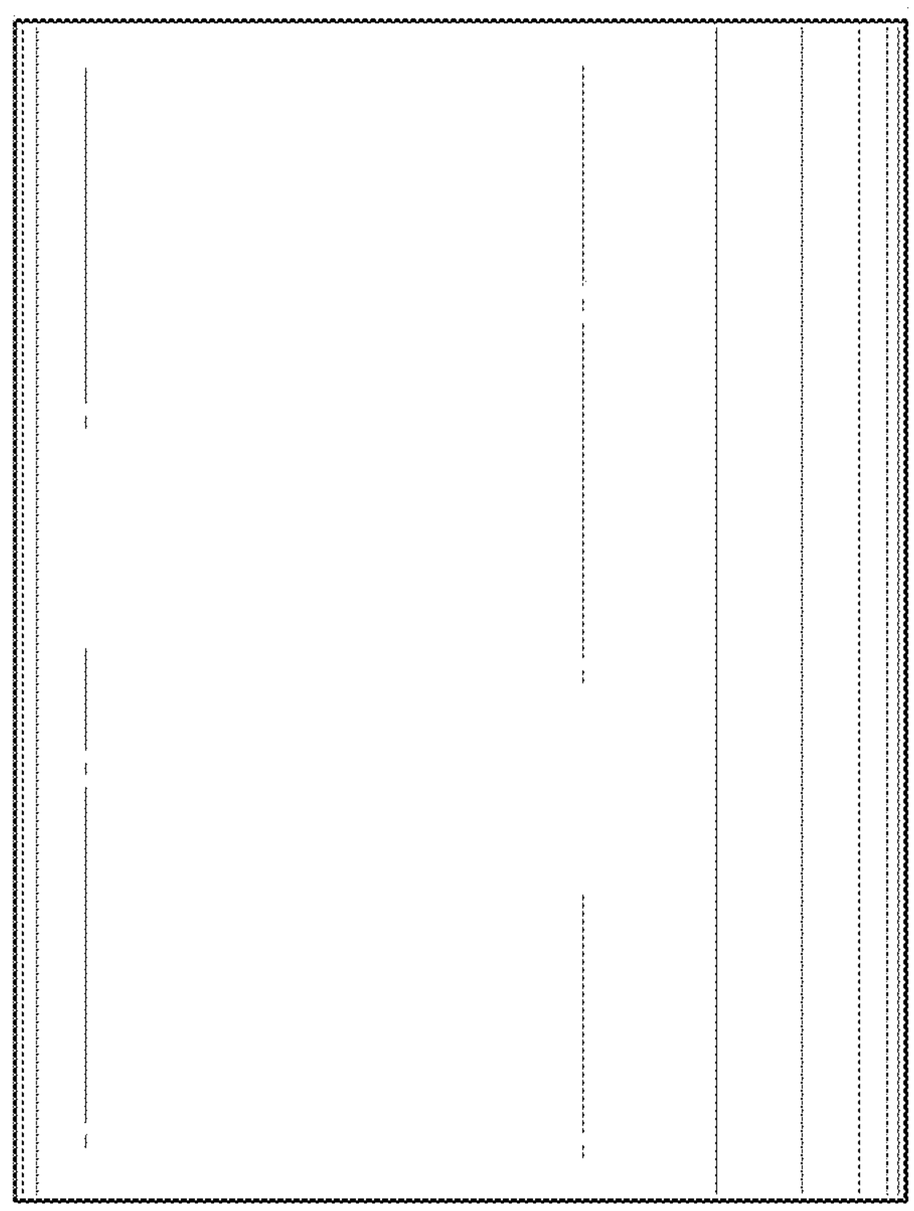

Fig. 3

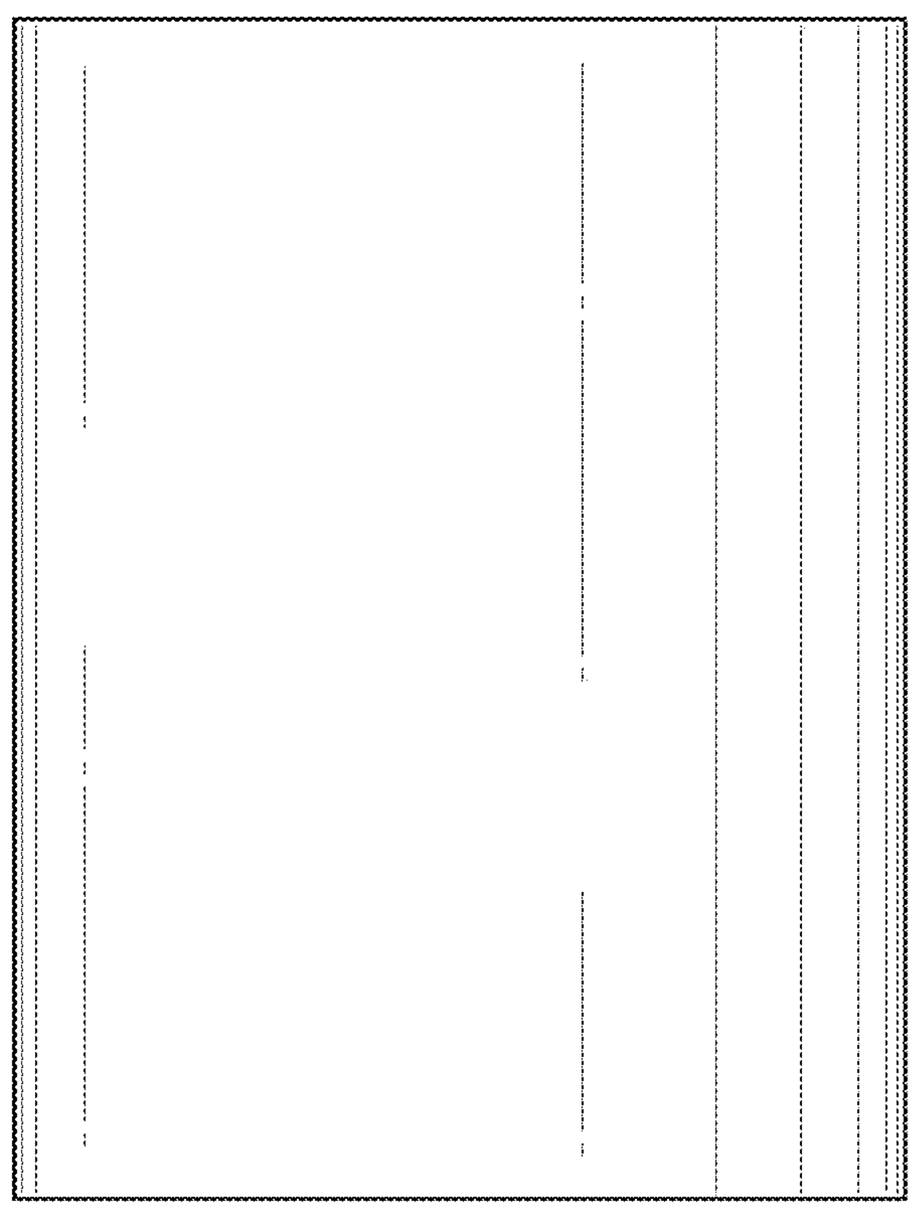

Fig. 4

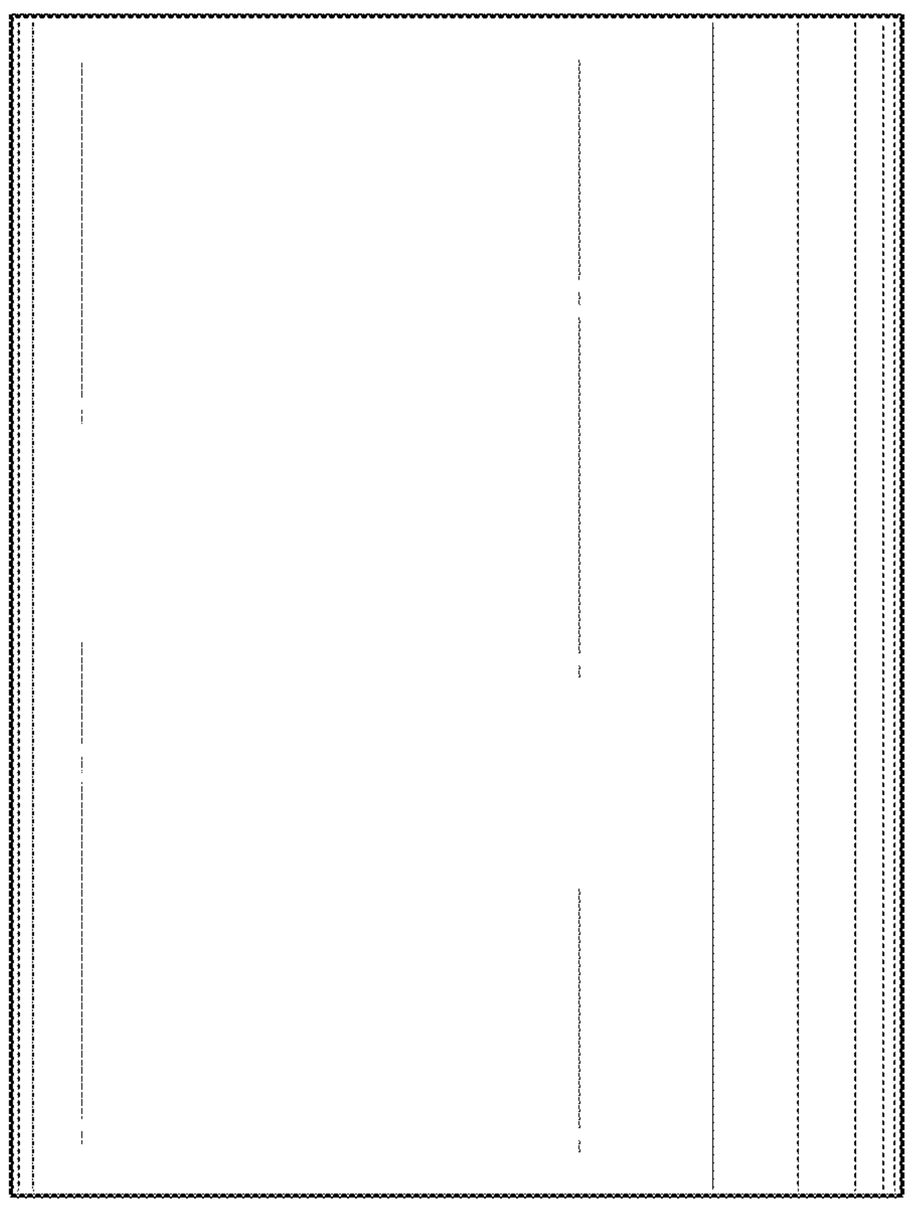

Fig. 5

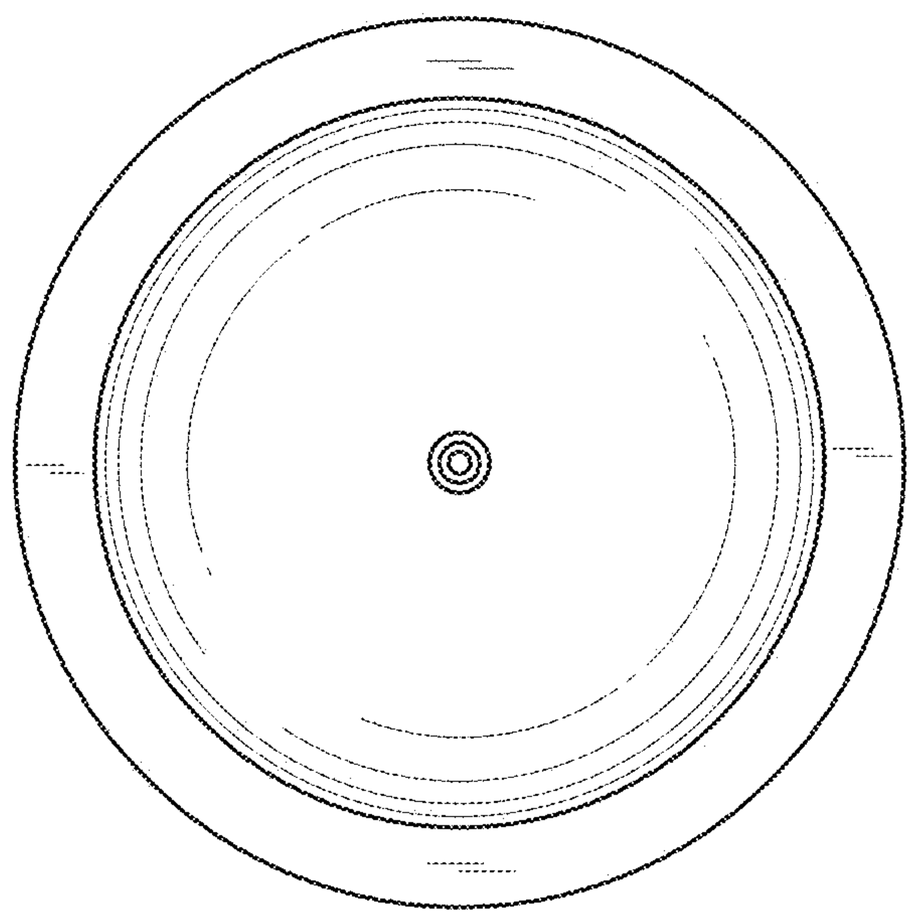

Fig. 6

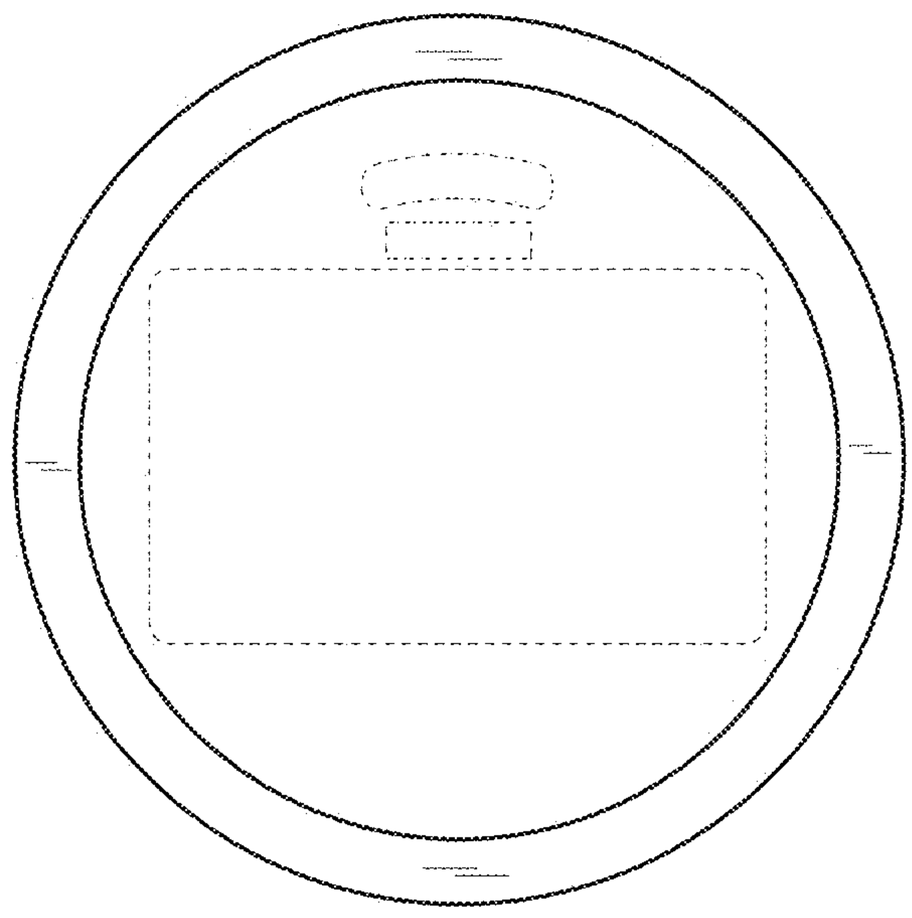

Fig. 7