US00D767217S

(12) United States Design Patent

Hickling

(10) Patent No.: US D767,217 S
(45) Date of Patent: ** Sep. 20, 2016

(54) **LEASH ANCHOR CARRIER**

(71) Applicant: **Derik Eugene Hickling**, Seattle, WA (US)

(72) Inventor: **Derik Eugene Hickling**, Seattle, WA (US)

(**) Term: **15 Years**

(21) Appl. No.: **29/529,120**

(22) Filed: **Jun. 3, 2015**

Related U.S. Application Data

(63) Continuation of application No. 14/694,882, filed on Apr. 23, 2015.

(51) **LOC (10) Cl.** **30-09**

(52) **U.S. Cl.**
USPC **D30/154**; D8/349

(58) **Field of Classification Search**
USPC D30/154; D8/349, 354; D21/840; 119/747, 769, 780, 786, 787, 788, 791, 119/795, 797; 135/118; 248/519, 521, 523, 248/530, 545, 546; 52/155, 158, 159, 162
CPC A01K 1/04
See application file for complete search history.

(56) **References Cited**

U.S. PATENT DOCUMENTS

3,139,163 A * 6/1964 Haller E02D 5/803 D8/376
D363,755 S * 10/1995 Diederich D30/154
6,092,342 A * 7/2000 Sharapata E04H 12/2269 248/519
6,932,164 B1 * 8/2005 Williston B23B 31/107 173/128
6,938,384 B1 * 9/2005 Hodge E04H 15/62 D8/391
D667,913 S * 9/2012 Finnigan D21/840
8,944,399 B2 * 2/2015 Sutherland B63B 17/00 248/222.13
D738,191 S * 9/2015 Nas D8/349
D757,520 S * 5/2016 Pratt D8/349
2005/0127264 A1 * 6/2005 Mettler E04H 12/2246 248/519
2013/0206954 A1 * 8/2013 Wells E04H 12/2269 248/523
2013/0295803 A1 * 11/2013 Pietsch B63B 35/7933 441/75
2015/0327509 A1 * 11/2015 Hickling A01K 1/04 119/786

OTHER PUBLICATIONS

"The SUREswivel Pet Tether Safely Keeps Your Pet to One Spot". Found online Jun. 17, 2016 at trendhunter.com. Page dated Aug. 28, 2013. Retrieved from http://www.trendhunter.com/trends/pet-tether.*

"Bodyboard Flat Top Leash Anchor". Found online Jun. 17, 2016 at surfmorexm.com. Page dated Oct. 6, 2014. Retrieved from https://web.archive.org/web/20141006073021/http://www.surfmorexm.com/content/bodyboard-flat-top-leash-anchor.*

"Core Trax Tie Down Accessories". Found online Jun. 17, 2016 at realtruck.com. Page dated Mar. 20, 2008. Retrieved from https://www.realtruck.com/core-trax-tie-down-accessories/.*

* cited by examiner

Primary Examiner — Robert M Spear
Assistant Examiner — Kendra L Hamilton
(74) *Attorney, Agent, or Firm* — Michelle E. Carey; Telekta Law, P.S.

(57) **CLAIM**

The ornamental design for a leash anchor carrier, as shown and described.

DESCRIPTION

FIG. **1** is a top right perspective view of a leash anchor carrier showing my new design, the bottom left perspective view being a mirror image thereof;
FIG. **2** is a right elevational view thereof;
FIG. **3** is a left elevational view thereof;
FIG. **4** is a front elevational view thereof;
FIG. **5** is a rear elevational view thereof;
FIG. **6** is a top plan view thereof; and,
FIG. **7** is a bottom plan view thereof.

1 Claim, 3 Drawing Sheets

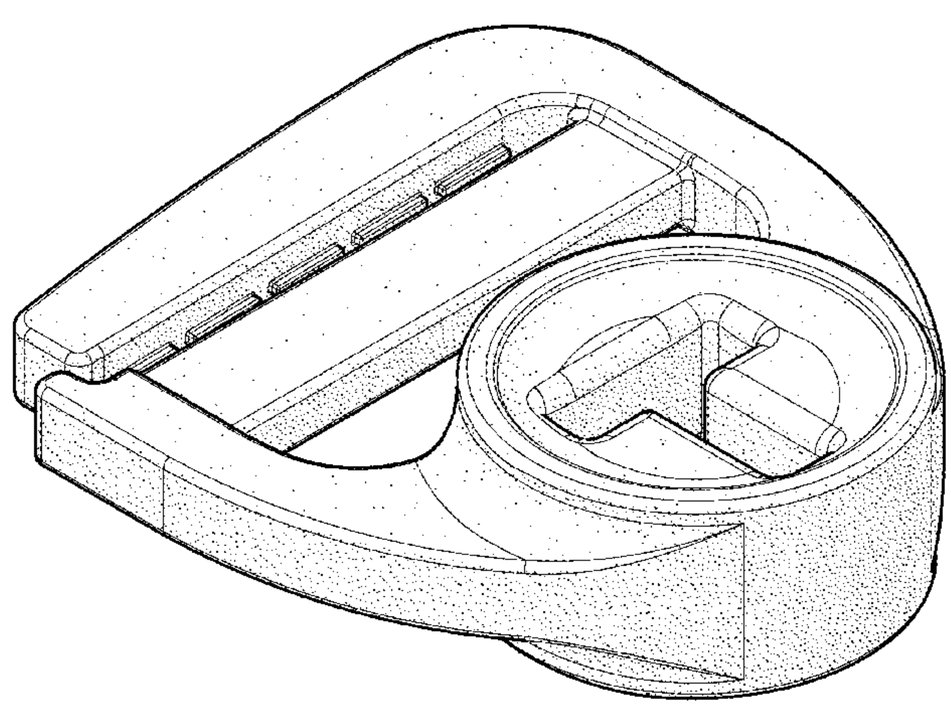

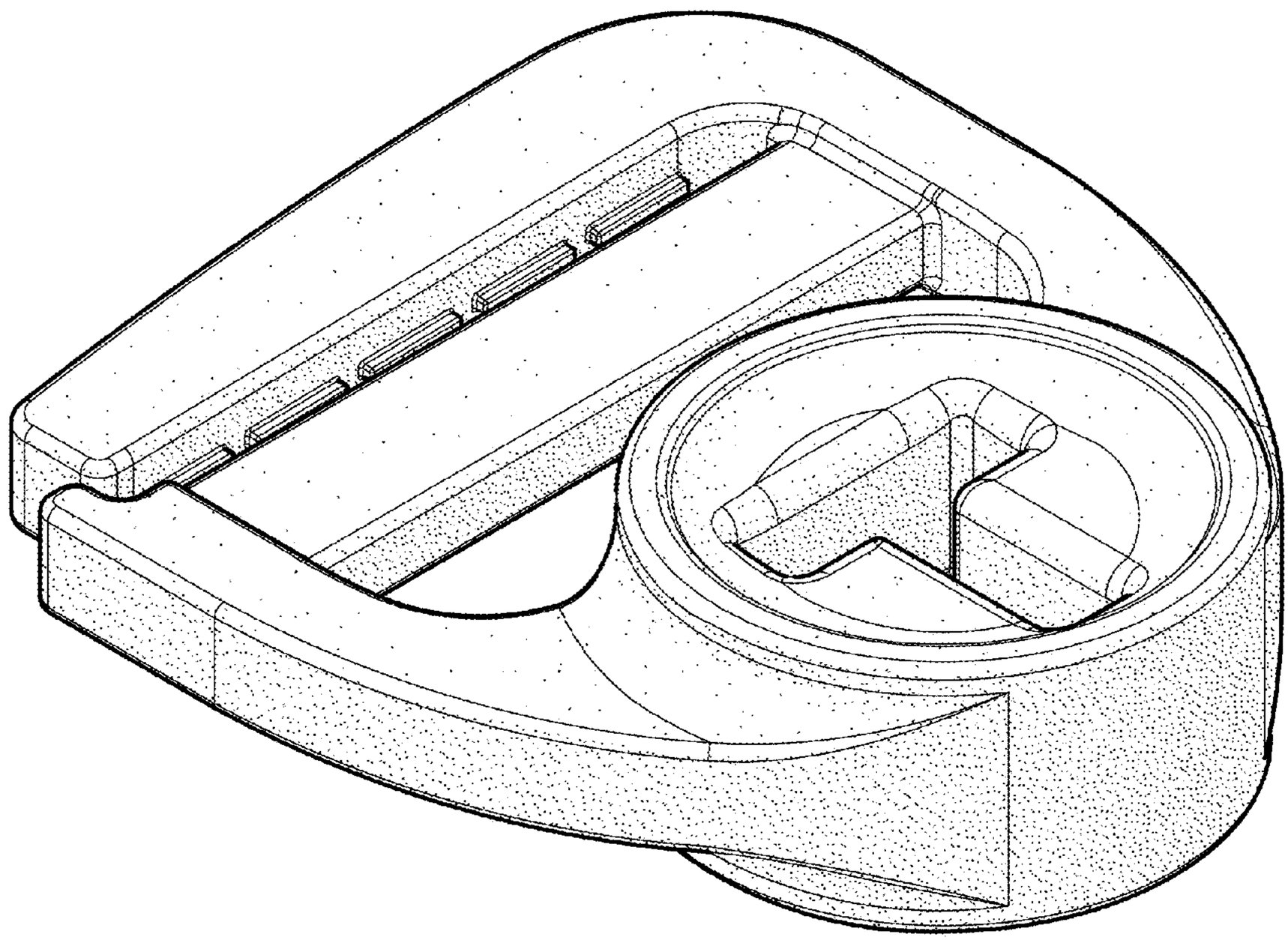

FIG. 1

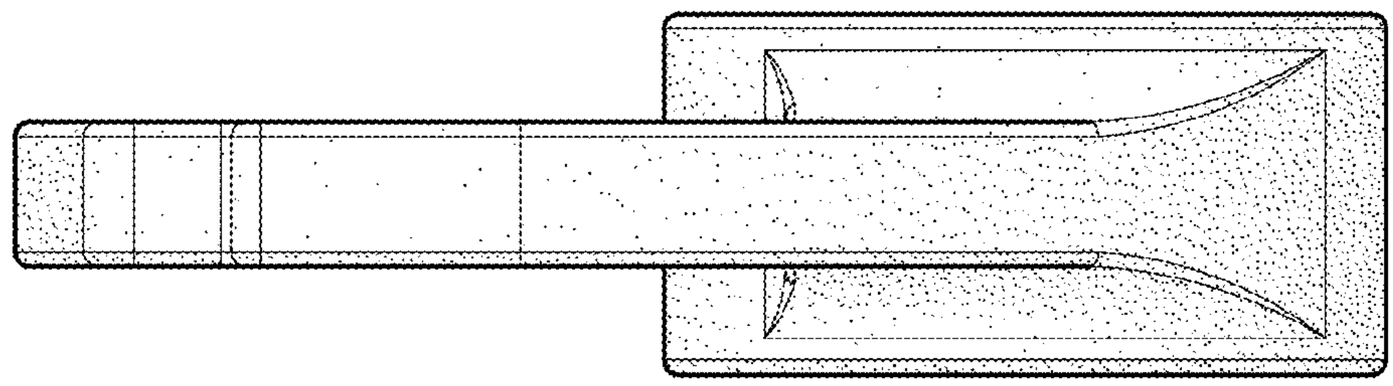

FIG.2

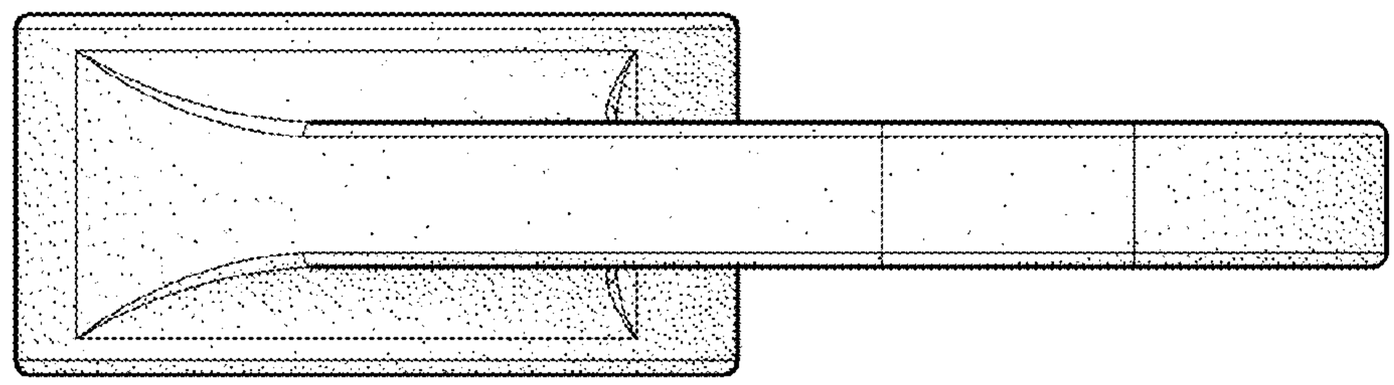

FIG.3

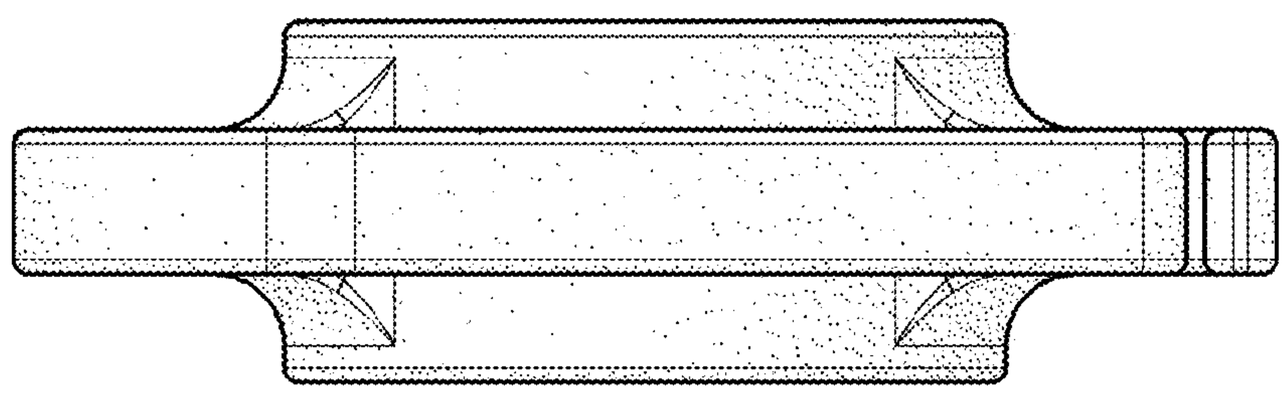

FIG.4

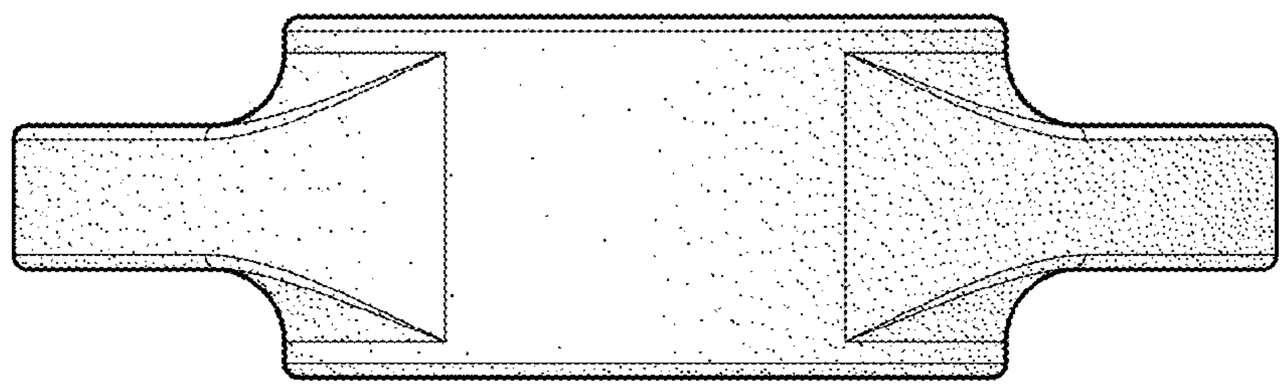

FIG.5

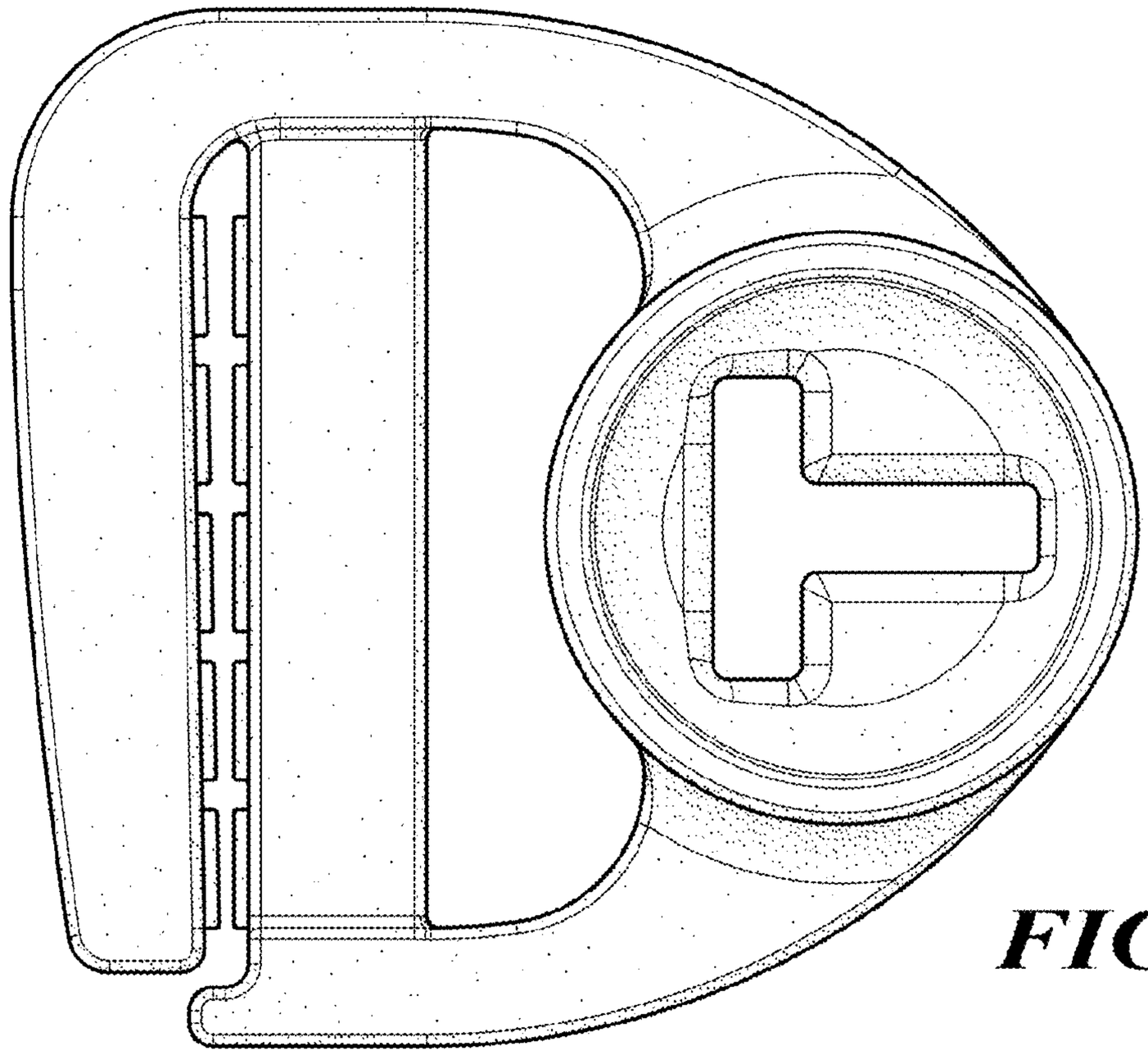

FIG. 6

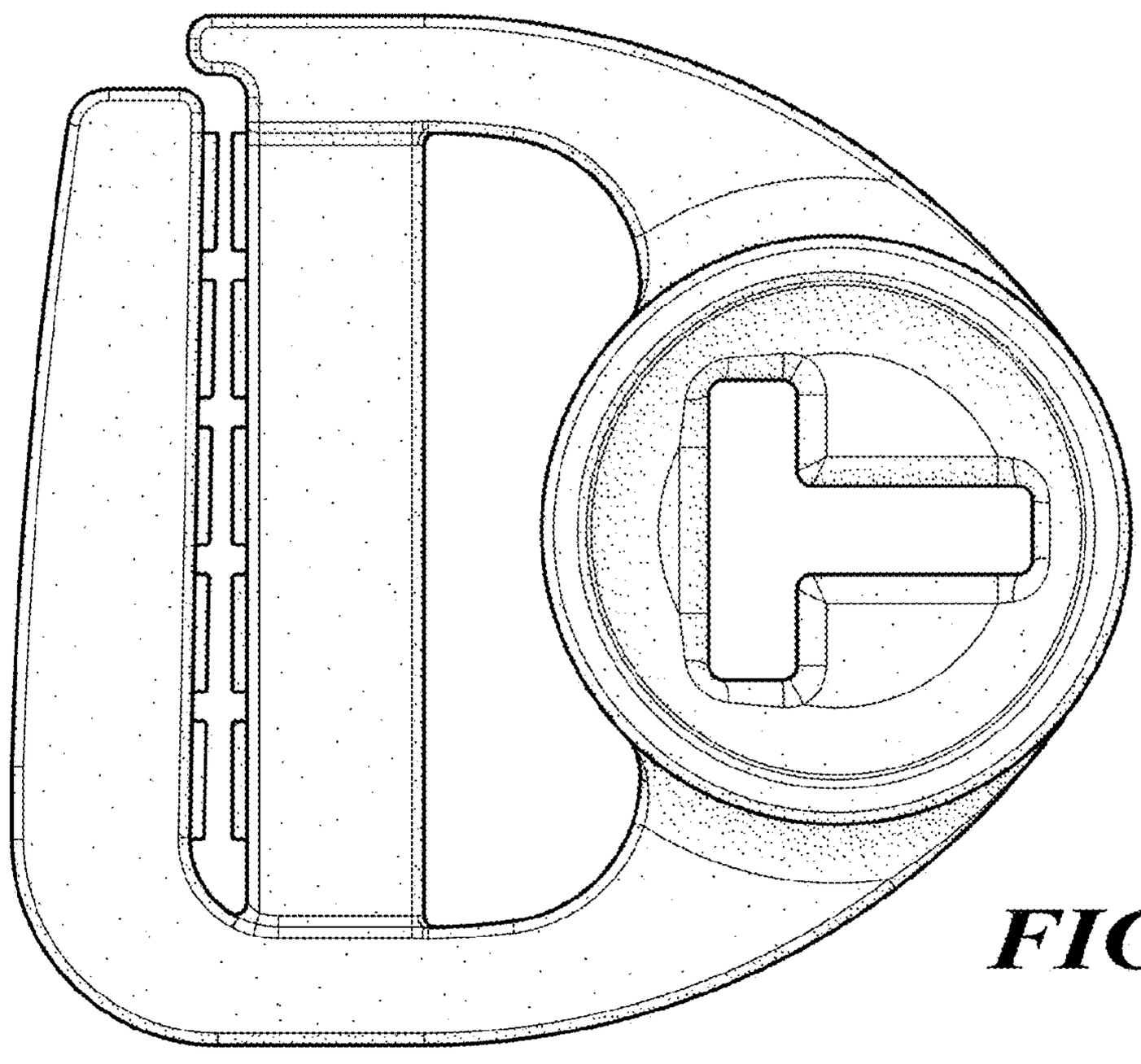

FIG. 7