US00D766616S

(12) United States Design Patent
Citterio

(10) Patent No.: US D766,616 S
(45) Date of Patent: ** Sep. 20, 2016

(54) **TOWEL HOLDER**

(71) Applicant: **HANSGROHE SE**, Schiltach (DE)

(72) Inventor: **Antonio Citterio**, Milan (IT)

(73) Assignee: **Hansgrohe SE**, Schiltach (DE)

(**) Term: **14 Years**

(21) Appl. No.: **29/492,166**

(22) Filed: **May 29, 2014**

(30) **Foreign Application Priority Data**

Dec. 3, 2013 (EM) 001391742-0003

(51) **LOC (10) Cl.** **06-04**

(52) **U.S. Cl.**
USPC **D6/549**

(58) **Field of Classification Search**
USPC D6/546–550, 512–525; D8/300, D8/315–321, 354, 363, 373, 380; 108/28–29; 211/13.1, 16, 85.5, 86.01, 211/87.01, 88.04, 100, 105.1, 105.2, 106, 211/113, 123, 181.1, 182–183; 248/49, 248/175, 176.1, 200, 201, 205.1, 251, 302, 248/309.1, 315; 242/570, 590, 595–598; D25/45
CPC A47K 10/3836; A47K 10/38
See application file for complete search history.

(56) **References Cited**

U.S. PATENT DOCUMENTS

D264,407	S	*	5/1982	Thompson	D6/548
D274,026	S	*	5/1984	Boroch	D6/548
5,125,586	A	*	6/1992	Whitethorn	A47K 10/3836 242/573.9
D338,125	S	*	8/1993	Sample	D6/548
5,373,950	A	*	12/1994	Marc	D06F 57/12 211/105.1
D410,580	S	*	6/1999	Kaffenberger, Sr.	D34/38
D422,171	S	*	4/2000	Mahlmann	D6/548
6,076,777	A	*	6/2000	Farm	A61K 8/418 248/205.1
D450,510	S	*	11/2001	Gottwald	D6/548
D571,592	S	*	6/2008	Bickler	D6/548
7,490,809	B2	*	2/2009	Liang	F16M 11/00 248/146
D590,645	S	*	4/2009	Weststrate	D6/548
D698,629	S	*	2/2014	Hansen	D8/370

FOREIGN PATENT DOCUMENTS

CN	302280791	1/2013
CN	302579720	9/2013
CN	302579722	9/2013
EM	002051797-0003	6/2012
EM	002307595-0003	9/2013

OTHER PUBLICATIONS

Hansgrohe USA website, Axor Universal Dual Towel Bar, Jun. 3, 2016, http://www.hansgrohe-usa.com/articledetail-axor-universal-accessories-axor-universal-dual-towel-bar-42821000.html?fsid=&pageid=&q=towel%20bar.*

* cited by examiner

Primary Examiner — David Muller
Assistant Examiner — Nathan Johnston
(74) *Attorney, Agent, or Firm* — Lora J. Graentzdoerffer

(57) **CLAIM**

The ornamental design for a towel holder, as shown and described.

DESCRIPTION

FIG. **1** is a perspective view of a towel holder showing my new design;
FIG. **2** is a front elevation view;
FIG. **3** is a rear elevation view;
FIG. **4** is a left side elevation view;
FIG. **5** is a right side elevation view;
FIG. **6** is a top plan view; and,
FIG. **7** is a bottom plan view.
The broken lines in the drawings represent unclaimed portions of the design and form no part of the claimed design.

1 Claim, 7 Drawing Sheets

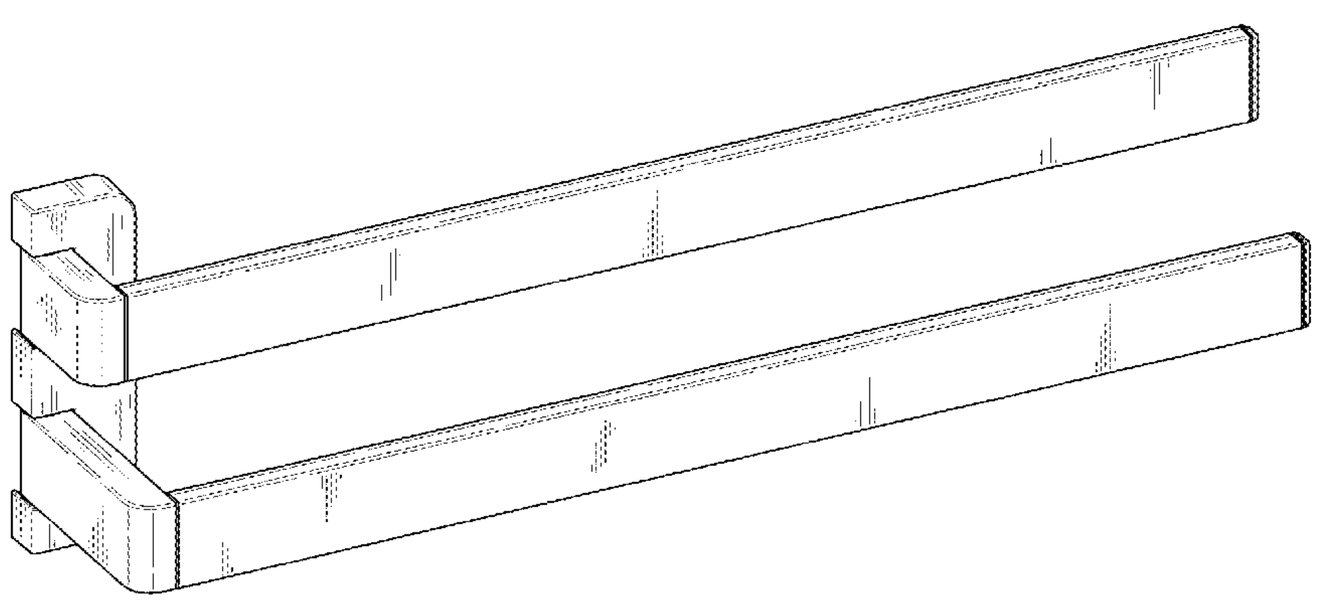

FIG. 1

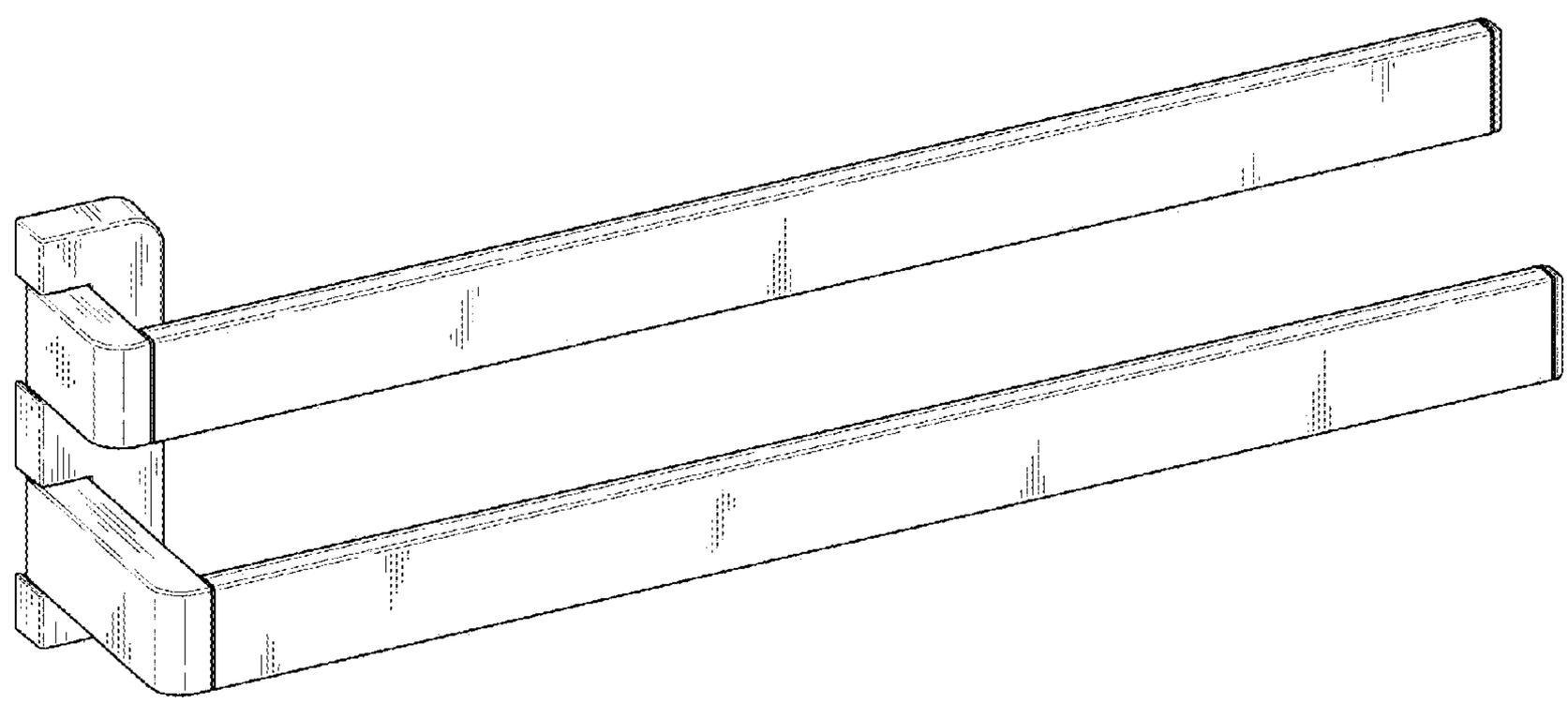

FIG. 2

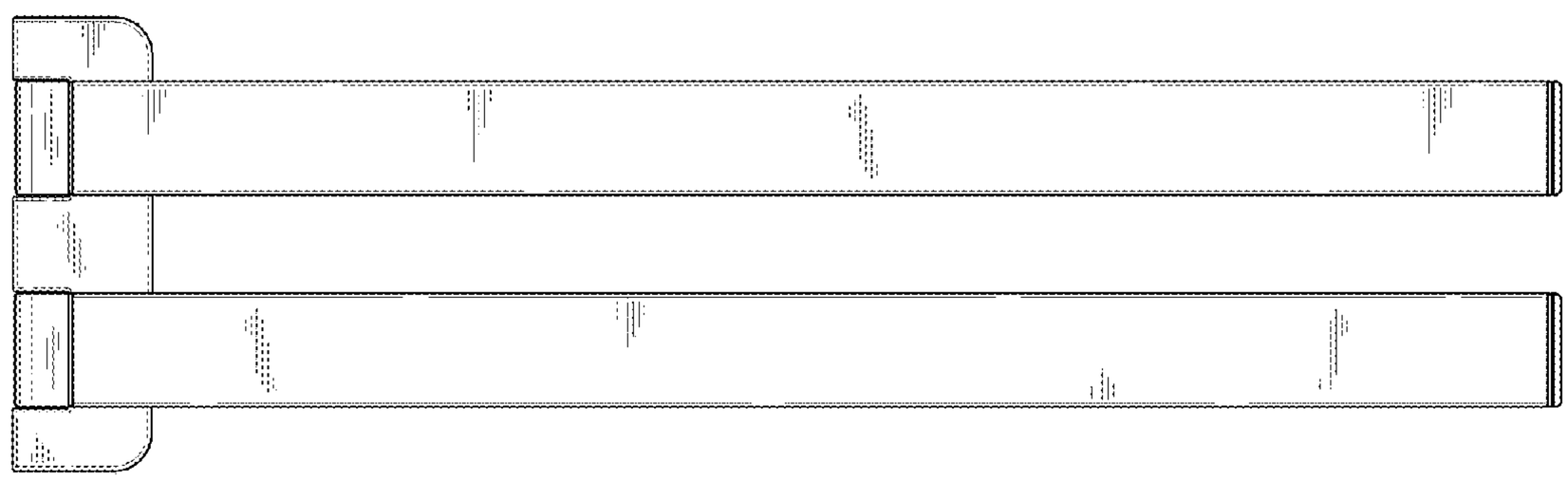

FIG. 3

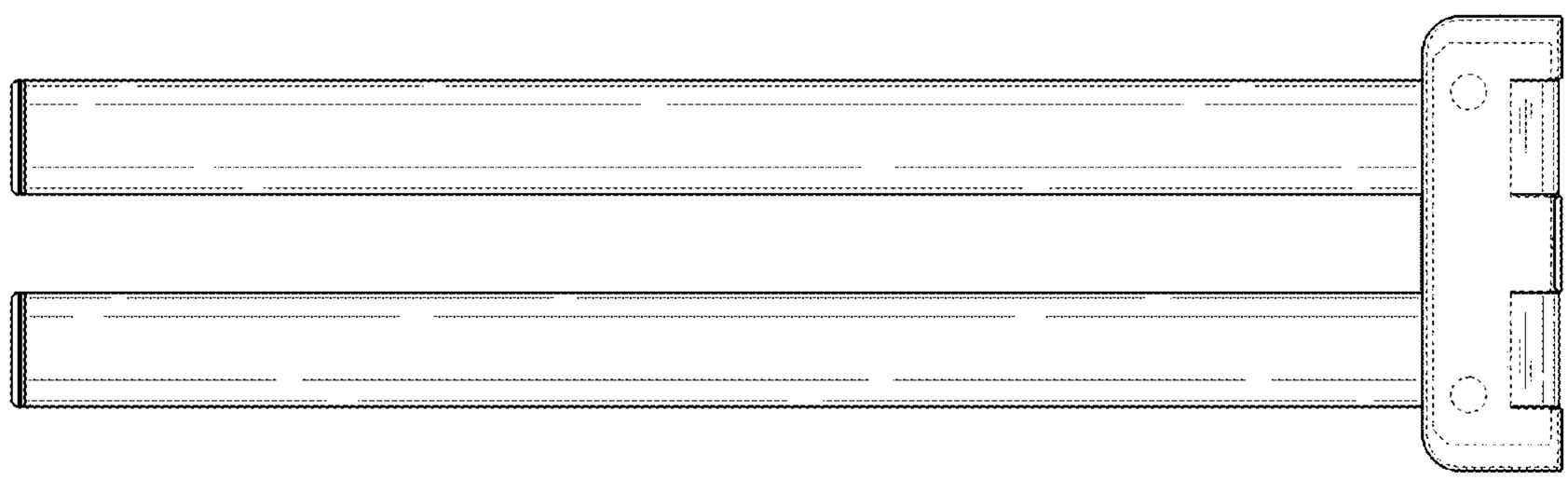

FIG. 4

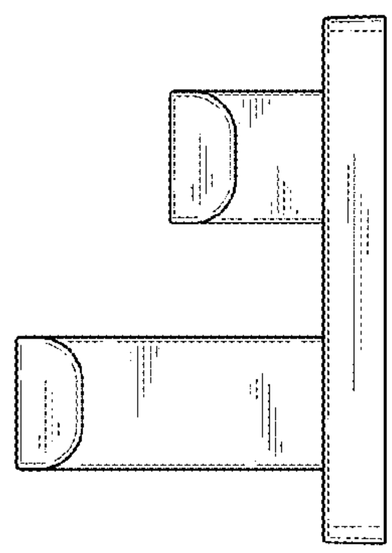

FIG. 5

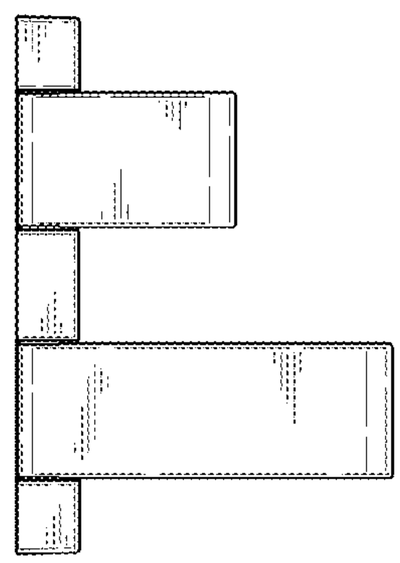

FIG. 6

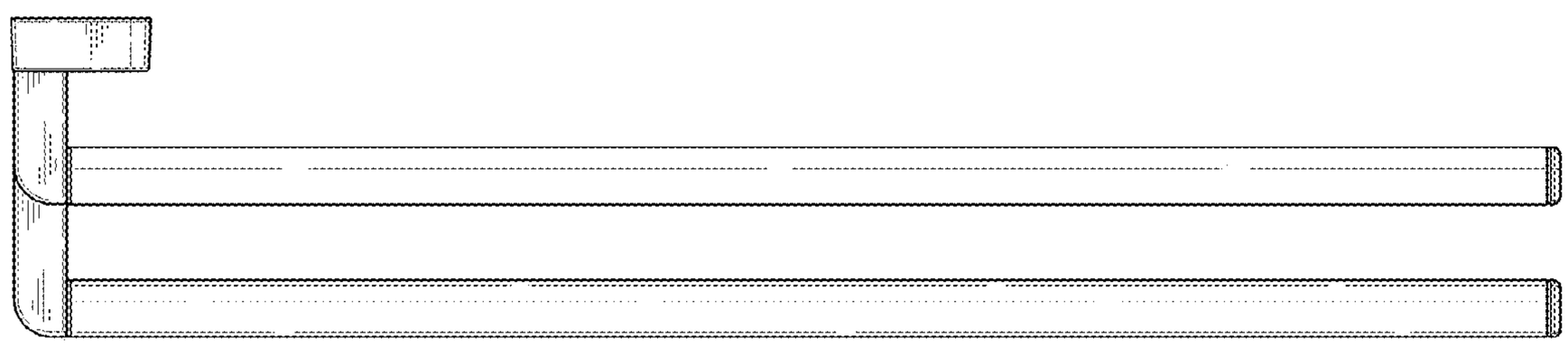
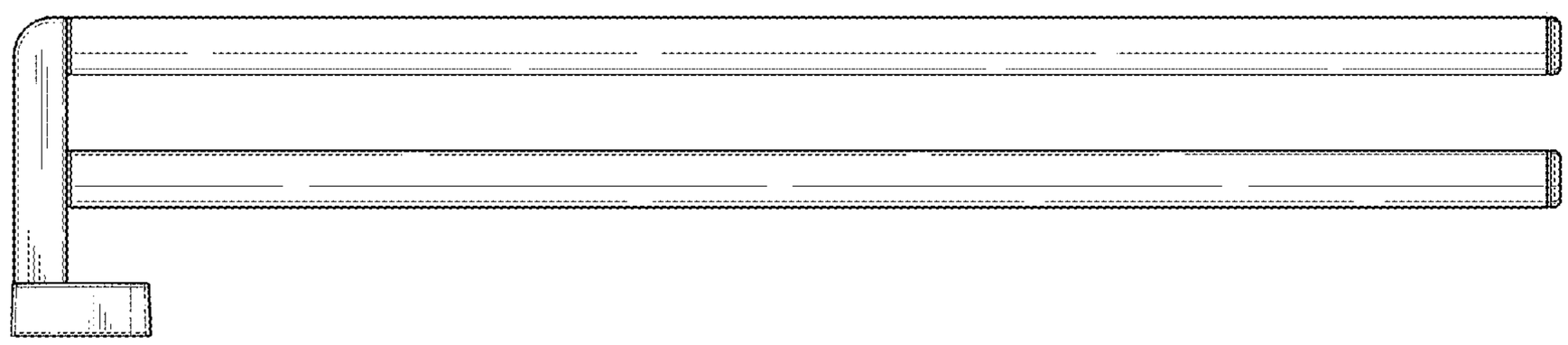
FIG. 7