US00D766411S

(12) United States Design Patent

Lee et al.

(10) Patent No.: US D766,411 S
(45) Date of Patent: ** Sep. 13, 2016

(54) **AIR CONDITIONER**

(71) Applicant: **Samsung Electronics Co., Ltd.**, Suwon-si, Gyeonggi-do (KR)

(72) Inventors: **Dae Kyun Lee**, Suwon-si (KR); **Jin Sook Park**, Uiwang-si (KR); **Hee Jae Jeong**, Seoul (KR)

(73) Assignee: **SAMSUNG ELECTRONICS CO., LTD.** (KR)

(**) Term: **14 Years**

(21) Appl. No.: **29/506,604**

(22) Filed: **Oct. 17, 2014**

(30) **Foreign Application Priority Data**

Apr. 21, 2014 (KR) 30-2014-0020123

(51) **LOC (10) Cl.** **23-04**

(52) **U.S. Cl.**
USPC **D23/351**

(58) **Field of Classification Search**
USPC D23/314, 317, 324, 328, 329, 330, 332, D23/333, 335, 341, 342, 351, 353, 354, 355, D23/356, 359, 364, 365, 370, 385, 386, 388, D23/393
CPC F24F 1/00; F24F 1/0007; F24F 1/02; F24F 1/08; F24F 1/42; F24F 1/56; F24F 1/60; F24F 3/044; F24F 3/048; F24F 3/16; F24F 7/00; F24F 7/04; F24F 12/001; F24F 12/006
See application file for complete search history.

(56) **References Cited**

U.S. PATENT DOCUMENTS

D556,880	S	*	12/2007	Choi	D23/351
D569,962	S	*	5/2008	Nishio	D23/393
D605,266	S	*	12/2009	Nakamura	D23/351
D605,267	S	*	12/2009	Nakamura	D23/351
D613,842	S	*	4/2010	Yamashita	D23/351
D621,018	S	*	8/2010	Nagahori	D23/351
D621,920	S	*	8/2010	Yamana	D23/351
D700,307	S	*	2/2014	Seki	D23/351

* cited by examiner

Primary Examiner — George D Kirschbaum
Assistant Examiner — Natasha Vujcic
(74) *Attorney, Agent, or Firm* — Cantor Colburn LLP

(57) **CLAIM**

We claim, the ornamental design for air conditioner, as shown and described.

DESCRIPTION

FIG. **1** is the front perspective view of air conditioner showing our new design;
FIG. **2** is the front view thereof;
FIG. **3** is the rear view thereof;
FIG. **4** is the left view thereof;
FIG. **5** is the right view thereof;
FIG. **6** is the top plan view thereof; and,
FIG. **7** is the bottom plan view thereof.
The broken lines in the drawings illustrate portions of the air conditioner which form no part of the claimed design.

1 Claim, 7 Drawing Sheets

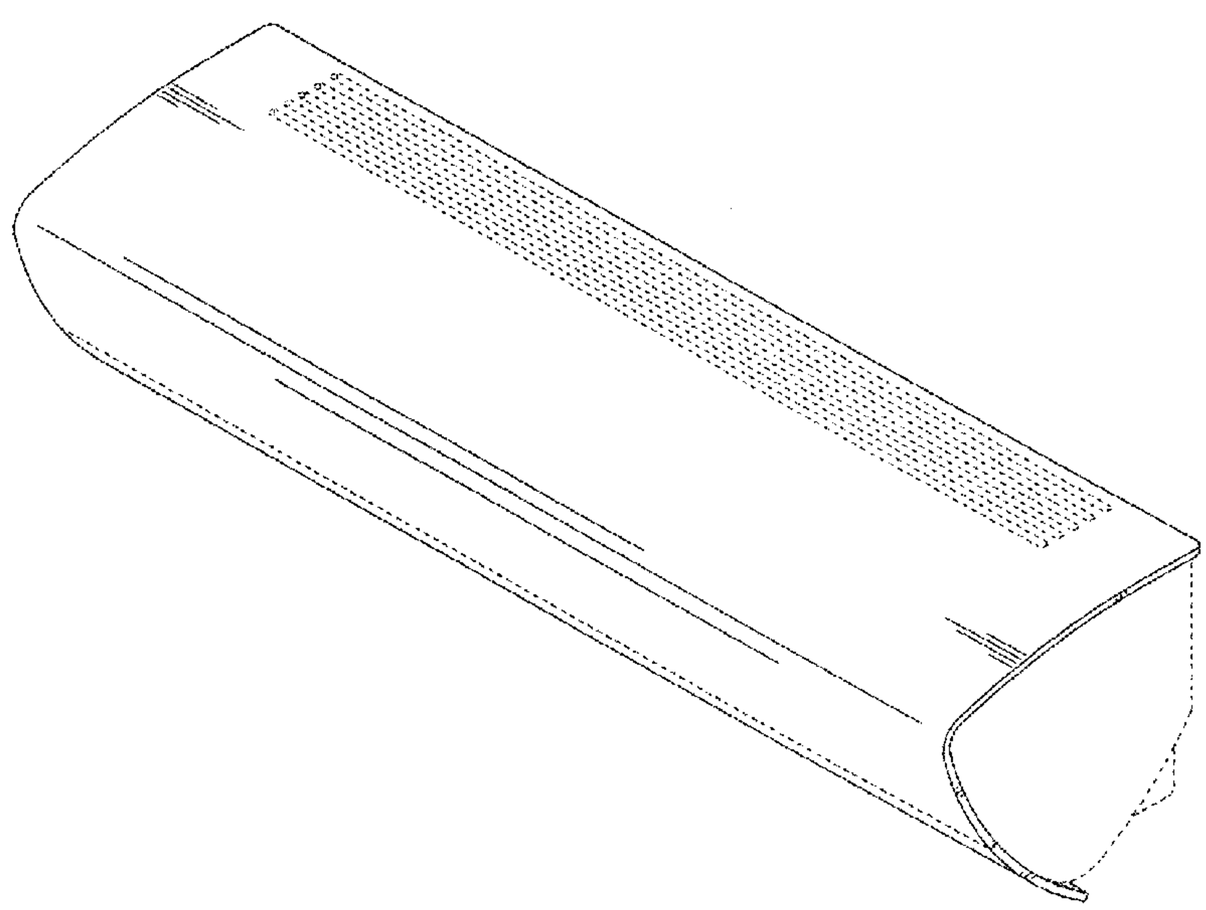

Fig. 1

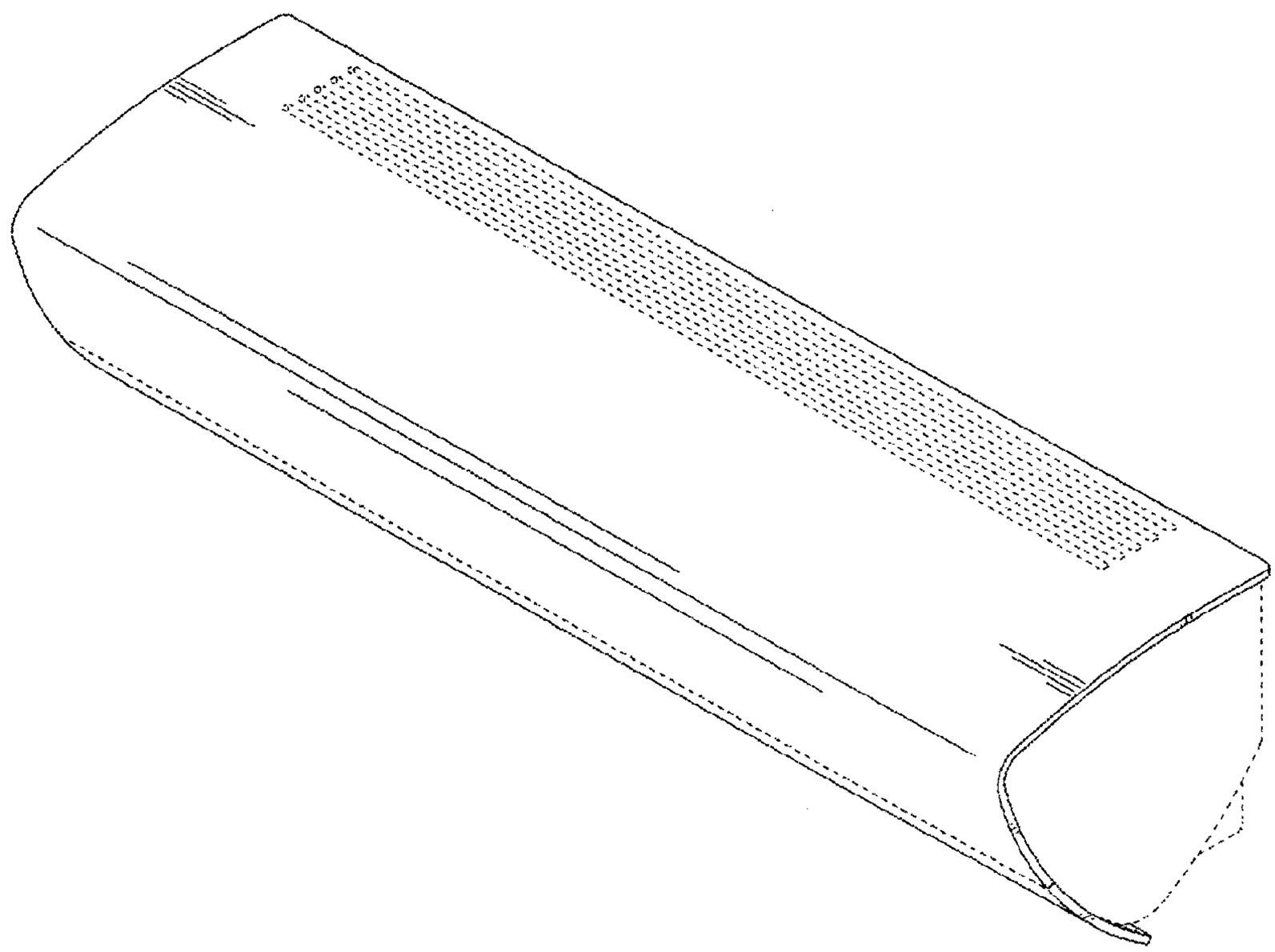

Fig. 2

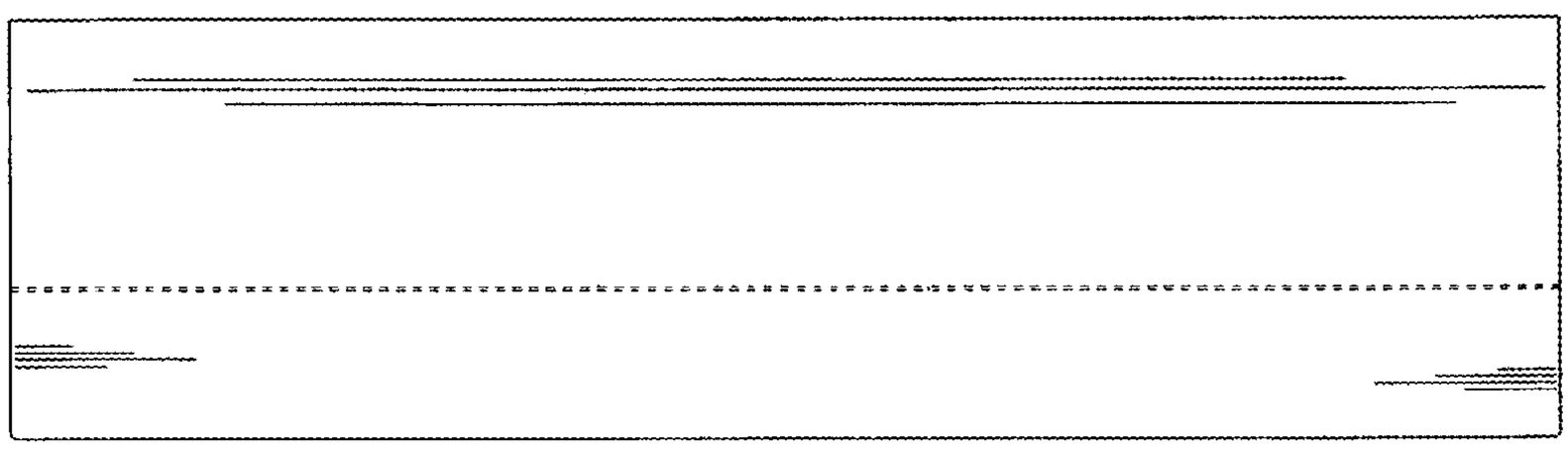

Fig. 3

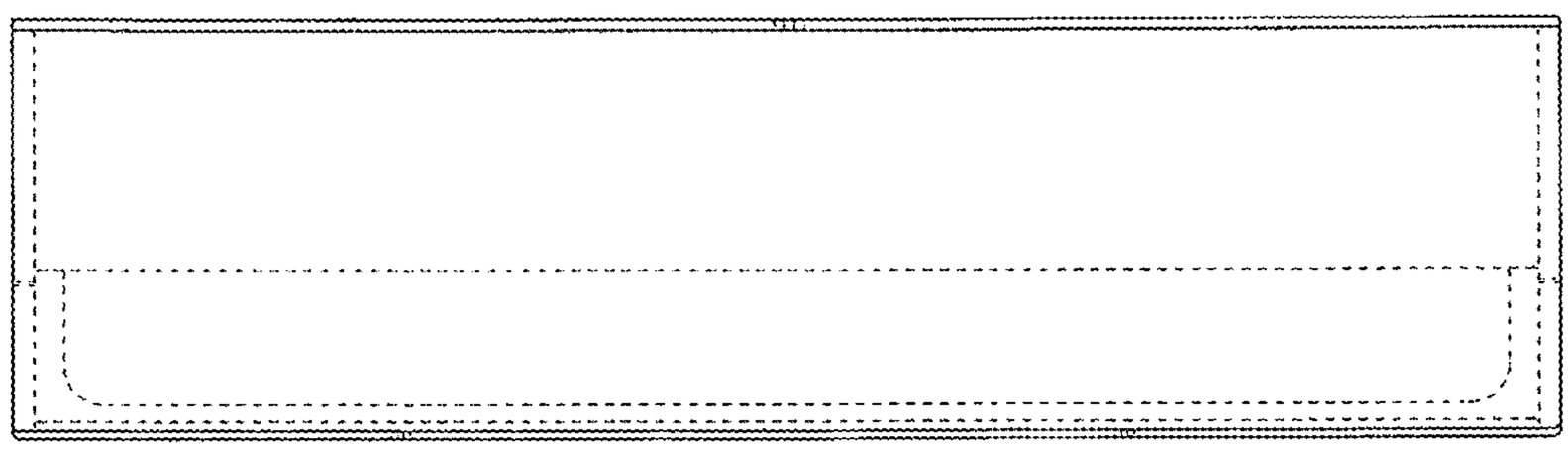

Fig. 4

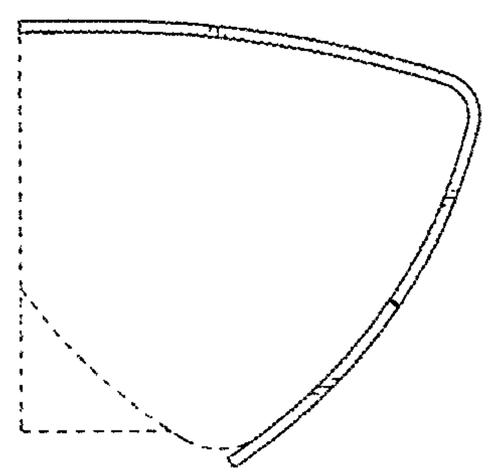

Fig. 5

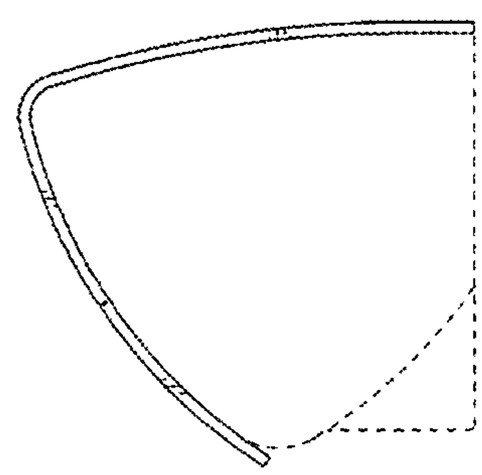

Fig. 6

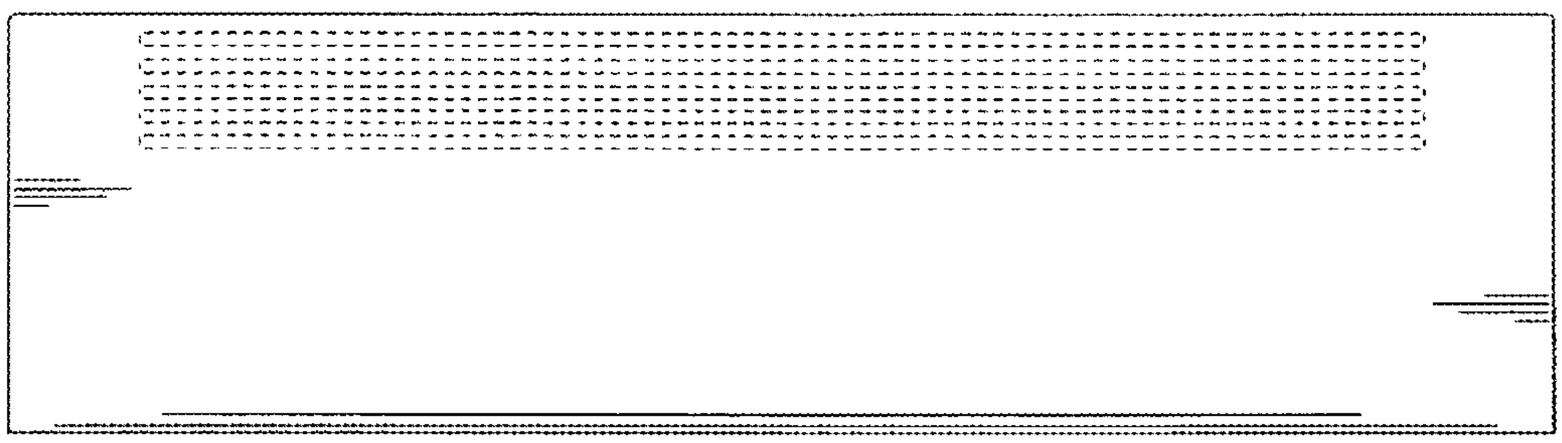
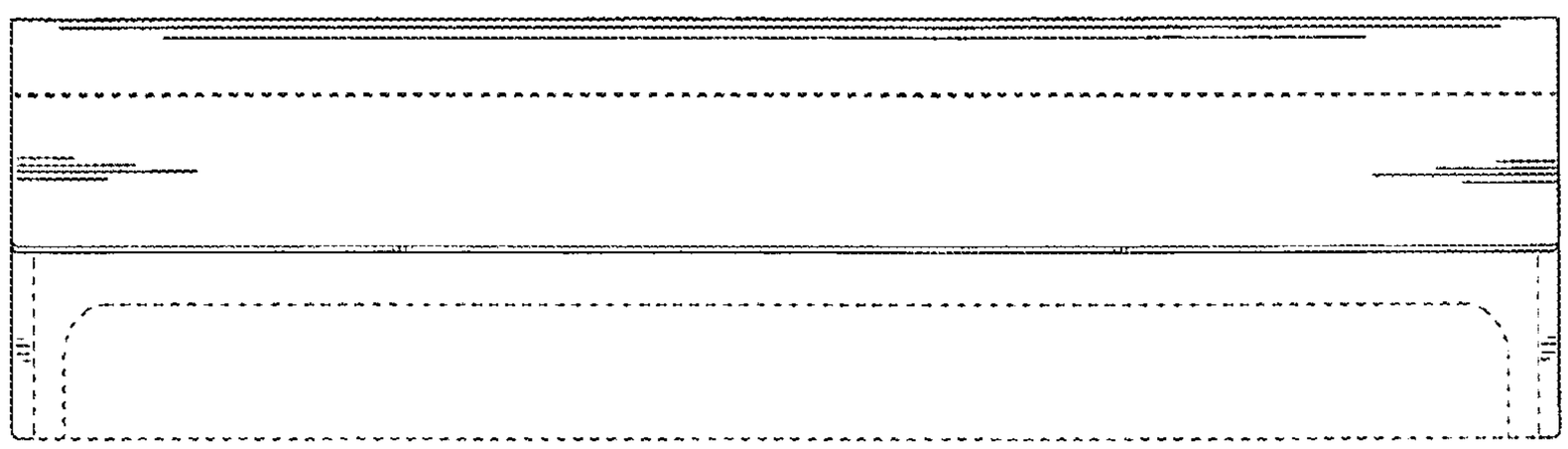
Fig. 7