US00D766254S

(12) United States Design Patent

Kawakami et al.

(10) Patent No.: US D766,254 S
(45) Date of Patent: ** Sep. 13, 2016

(54) **DIGITAL CAMERA DISPLAY SCREEN WITH TRANSITIONAL GRAPHICAL USER INTERFACE**

(71) Applicant: **OLYMPUS CORPORATION**, Shibuya-ku, Tokyo (JP)

(72) Inventors: **Maki Kawakami**, Tokyo (JP); **Hidefumi Nishi**, Kokubunji (JP)

(73) Assignee: **OLYMPUS CORPORATION**, Tokyo (JP)

(**) Term: **14 Years**

(21) Appl. No.: **29/471,103**

(22) Filed: **Oct. 28, 2013**

(30) **Foreign Application Priority Data**

Aug. 9, 2013 (JP) 2013-018440

(51) **LOC (10) Cl.** **14-04**

(52) **U.S. Cl.**
USPC **D14/485**

(58) **Field of Classification Search**
USPC D14/485–495; D18/26, 31, 32, 33; D20/11, 12, 23, 24, 25, 29, 30, 31, 32, D20/36, 37, 38; 715/702, 764, 838
CPC G06F 3/048; G06F 3/0481; G06F 3/0482; G06F 3/04817; G06F 3/04812
See application file for complete search history.

(56) **References Cited**

U.S. PATENT DOCUMENTS

D588,151 S * 3/2009 Okada D14/488
D596,646 S * 7/2009 Wani D14/488
D651,613 S * 1/2012 Ouilhet D14/491
D687,045 S * 7/2013 Plitkins et al. D14/485
D689,904 S * 9/2013 Aoshima D14/489
D697,076 S * 1/2014 Oda et al. D14/486
D699,750 S * 2/2014 Pearson et al. D14/488
D700,197 S * 2/2014 Akcasu et al. D14/486
D700,207 S * 2/2014 Pearson et al. D14/488
D714,813 S * 10/2014 Oda et al. D14/485
D715,810 S * 10/2014 Tsukamoto D14/485
D715,826 S * 10/2014 Sakuma D14/487
D715,828 S * 10/2014 Aoshima D14/488
D715,829 S * 10/2014 Aoshima D14/488
D715,830 S * 10/2014 Aoshima D14/488
D717,334 S * 11/2014 Sakuma D14/487
D725,133 S * 3/2015 Smirin et al. D14/486
D727,928 S * 4/2015 Allison et al. D14/485
D731,539 S * 6/2015 Omata D14/489
D731,543 S * 6/2015 Aoshima D14/491
D731,547 S * 6/2015 Kim et al. D14/492
2009/0096910 A1 * 4/2009 Yasuda et al. 348/333.01

* cited by examiner

Primary Examiner — Philip S Hyder
Assistant Examiner — Darlington Ly
(74) *Attorney, Agent, or Firm* — Holtz, Holtz & Volek PC

(57) **CLAIM**

The ornamental design for a digital camera display screen with graphical user interface, as shown and described.

DESCRIPTION

FIG. **1** is a front view of a first image of the digital camera display screen with transitional graphical user interface showing our new design;
FIG. **2** is a front view of a second image thereof; and,
FIG. **3** is a front view of an alternate second image thereof in accordance to an alternate embodiment.
Embodiment 1 sequentially transitions between FIGS. **1** and **2**; whereas Embodiment 2 sequentially transitions between FIGS. **1** and **3**. The process or period in which one image transitions to another image forms no part of the claimed design.
The broken line showing of the digital camera is for the purpose of illustrating environmental subject matter and forms no part of the claimed design.

1 Claim, 3 Drawing Sheets

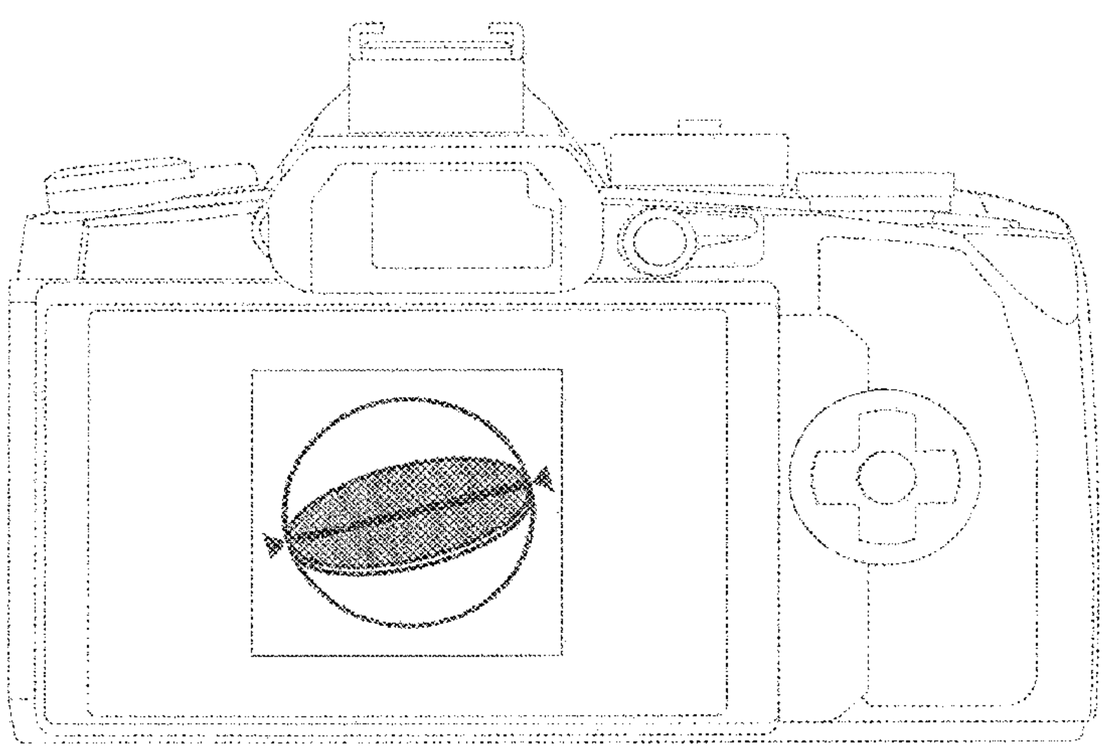

FIG. 1

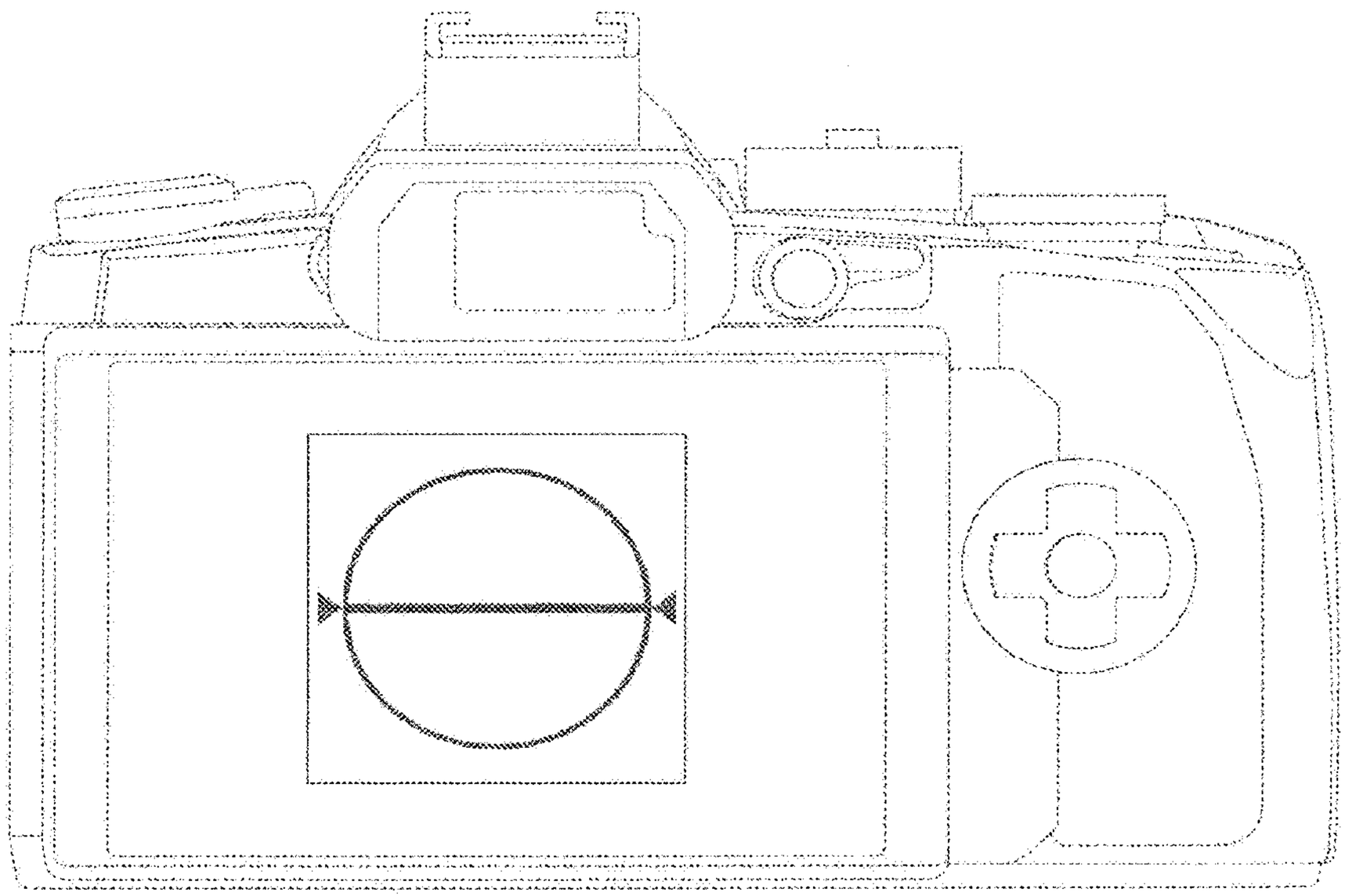

FIG. 2

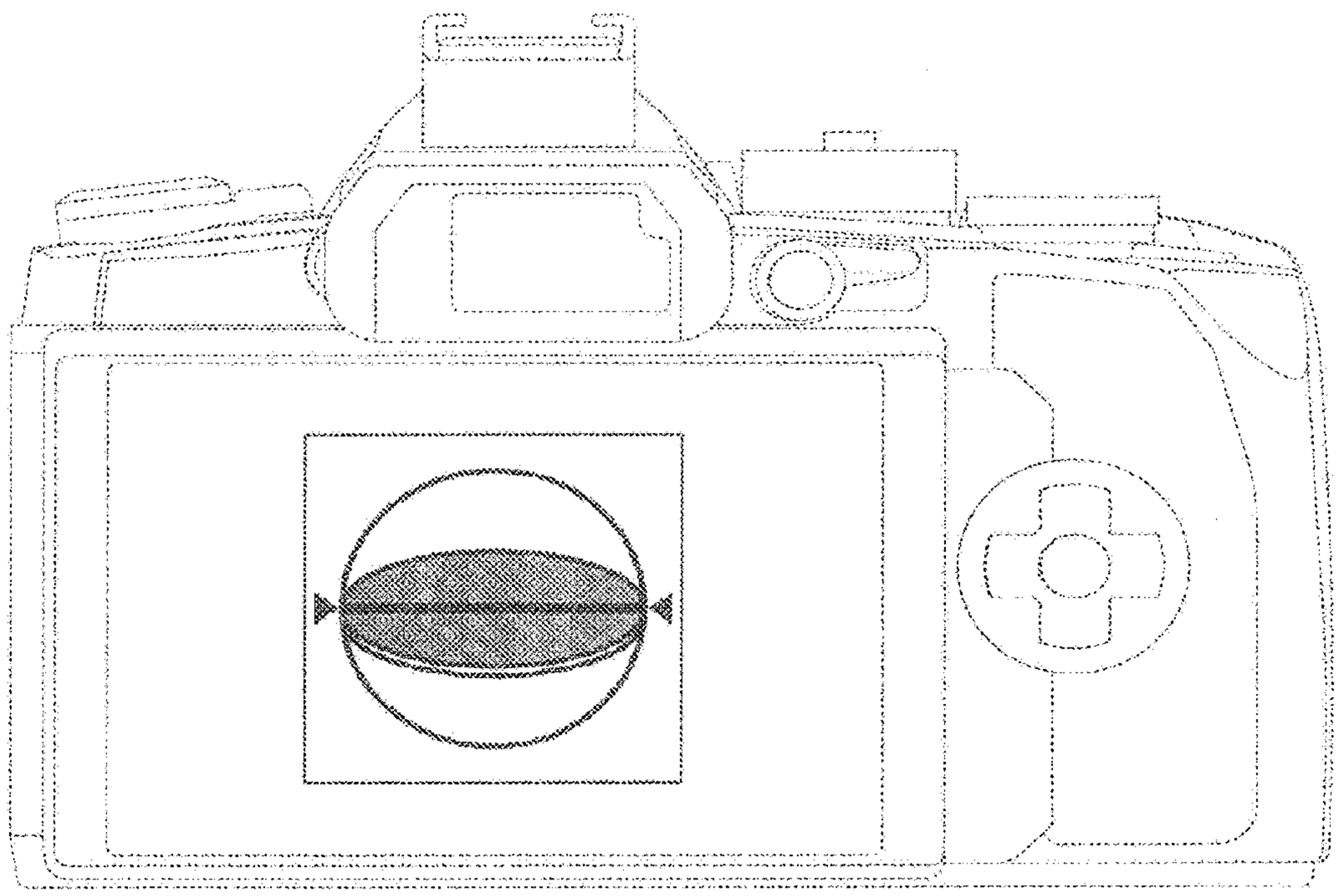
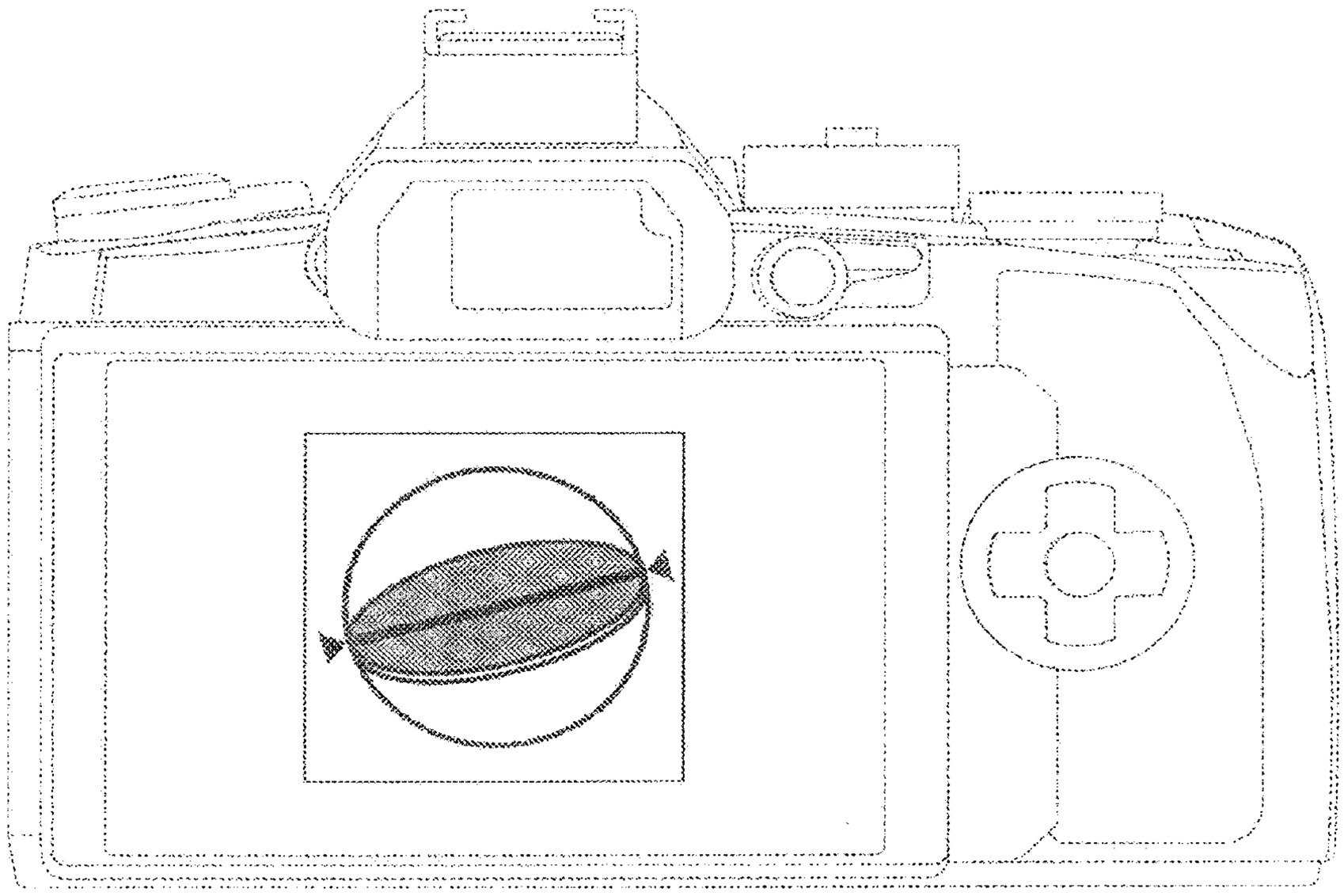
FIG. 3