US00D765016S

(12) United States Design Patent

Azadi et al.

(10) Patent No.: US D765,016 S
(45) Date of Patent: ** Aug. 30, 2016

(54) **MULTI-DEVICE DASH MOUNT FOR VEHICLES**

(71) Applicant: **Omix-Ada, Inc.**, Suwanee, GA (US)
(72) Inventors: **Ali Azadi**, Duluth, GA (US); **Jacob Heaven**, Auburn, GA (US)
(73) Assignee: **Omix-Ada, Inc.**, Suwanee, GA (US)

(**) Term: **14 Years**
(21) Appl. No.: **29/501,447**
(22) Filed: **Sep. 4, 2014**
(51) **LOC (10) Cl.** **12-16**
(52) **U.S. Cl.**
USPC **D12/415**
(58) **Field of Classification Search**
USPC D12/415, 400, 406, 416–420, 424–426
CPC B63B 25/00; B63B 7/085; B63B 17/00; B63B 35/00; B60R 16/04
See application file for complete search history.

(56) **References Cited**

U.S. PATENT DOCUMENTS

2,250,442	A	7/1941	Abell	
4,066,231	A	1/1978	Bahner et al.	
5,086,958	A	2/1992	Nagy	
5,396,556	A	3/1995	Chen	
5,860,573	A	1/1999	Hossack et al.	
5,979,724	A	11/1999	Loewenthal, Jr. et al.	
6,173,933	B1	1/2001	Whiteside et al.	
7,604,275	B2	10/2009	Vitito	
D603,322	S *	11/2009	Nicieja	D12/415
7,690,614	B1	4/2010	Mudd et al.	
7,857,268	B2	12/2010	Chiu	
D656,932	S *	4/2012	Wikel	D12/415
D682,772	S *	5/2013	Massaad	D12/415
D716,215	S *	10/2014	Dunn	D12/415
2001/0042812	A1*	11/2001	Perzewski	B60R 11/02 248/27.1
2010/0001151	A1*	1/2010	Wheatley	B60R 11/00 248/206.2
2012/0097723	A1	4/2012	Khatchatrian	
2015/0122858	A1*	5/2015	Azadi	B60R 7/06 224/483

FOREIGN PATENT DOCUMENTS

EP	0 488 836 A1	6/1992

* cited by examiner

Primary Examiner — Katrina A Betton
(74) *Attorney, Agent, or Firm* — Womble Carlyle Sandridge & Rice LLP

(57) **CLAIM**

The ornamental design for a multi-device dash mount for vehicles, as shown and described.

DESCRIPTION

FIG. **1** is a perspective view of a multi-device dash mount for vehicles showing our new design in a first configuration.
FIG. **2** is a side view thereof.
FIG. **3** is a top view thereof
FIG. **4** is a front view thereof.
FIG. **5** is a bottom view thereof.
FIG. **6** is a rear view thereof.
FIG. **7** is another perspective view thereof, shown with a GPS unit mounted thereto.
FIG. **8** is a perspective view of the multi-device dash mount for vehicles showing our new design in a second configuration.
FIG. **9** is a side view thereof.
FIG. **10** is a top view thereof.
FIG. **11** is a front view thereof.
FIG. **12** is a bottom view thereof.
FIG. **13** is a rear view thereof; and,
FIG. **14** is another perspective view thereof, shown with both a GPS unit and camera unit mounted thereto.
The broken lines illustrate a GPS unit and a camera unit that may be mounted to the multi-device dash mount, which GPS unit and camera unit form no part of the claimed design.

1 Claim, 8 Drawing Sheets

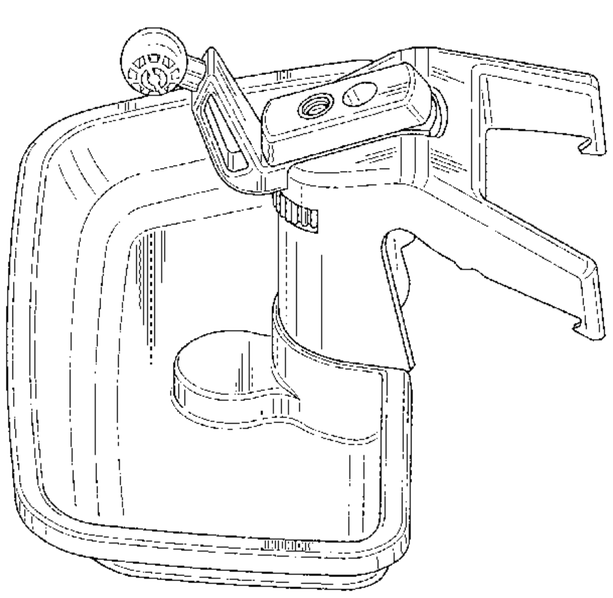

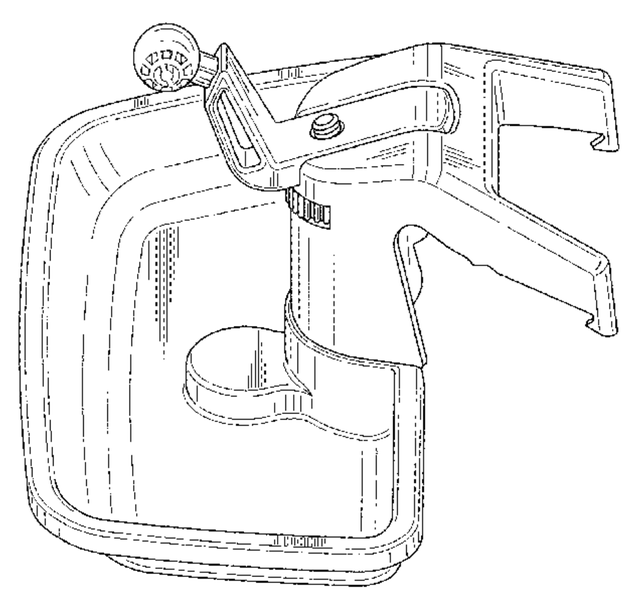

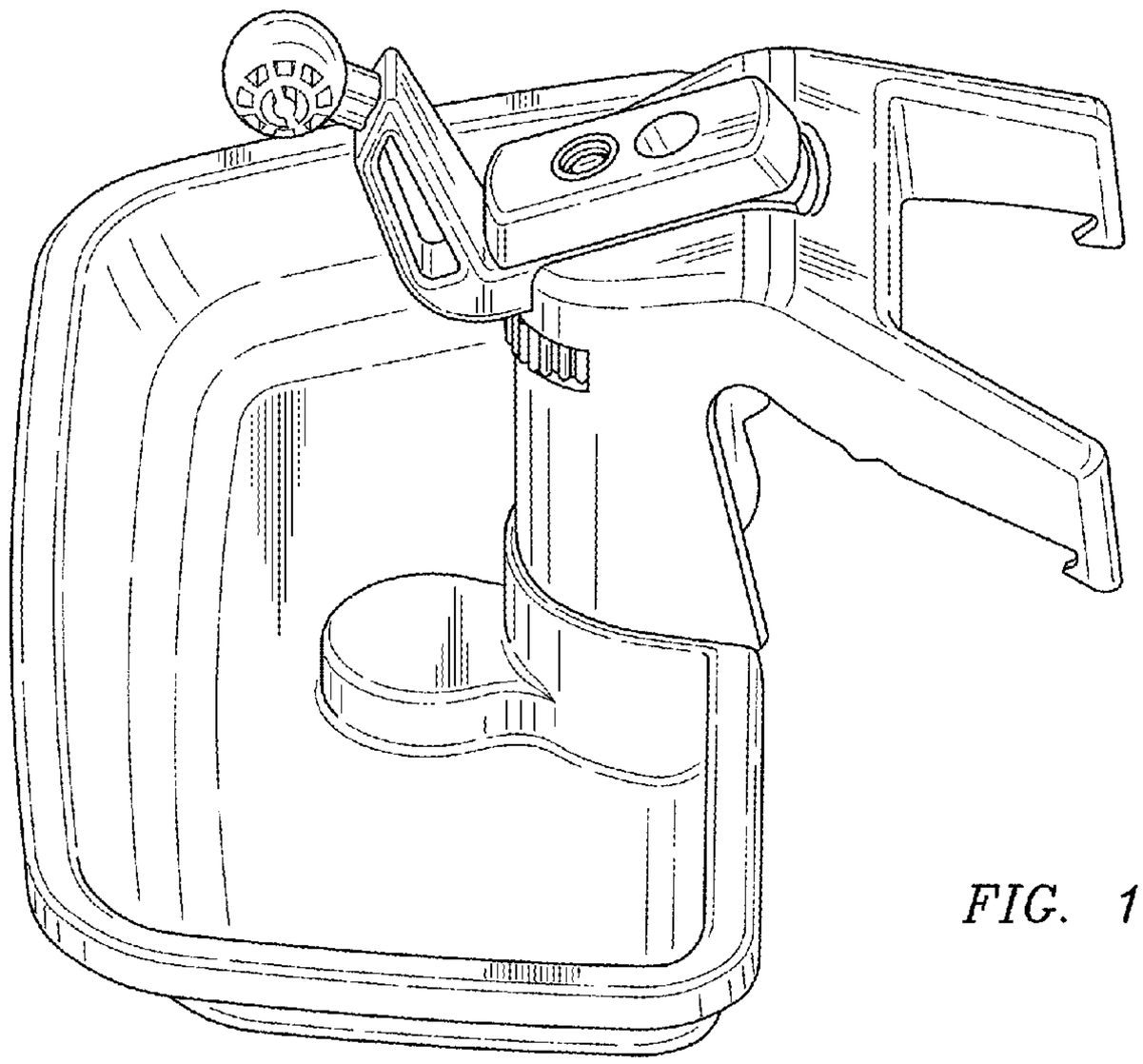

FIG. 1

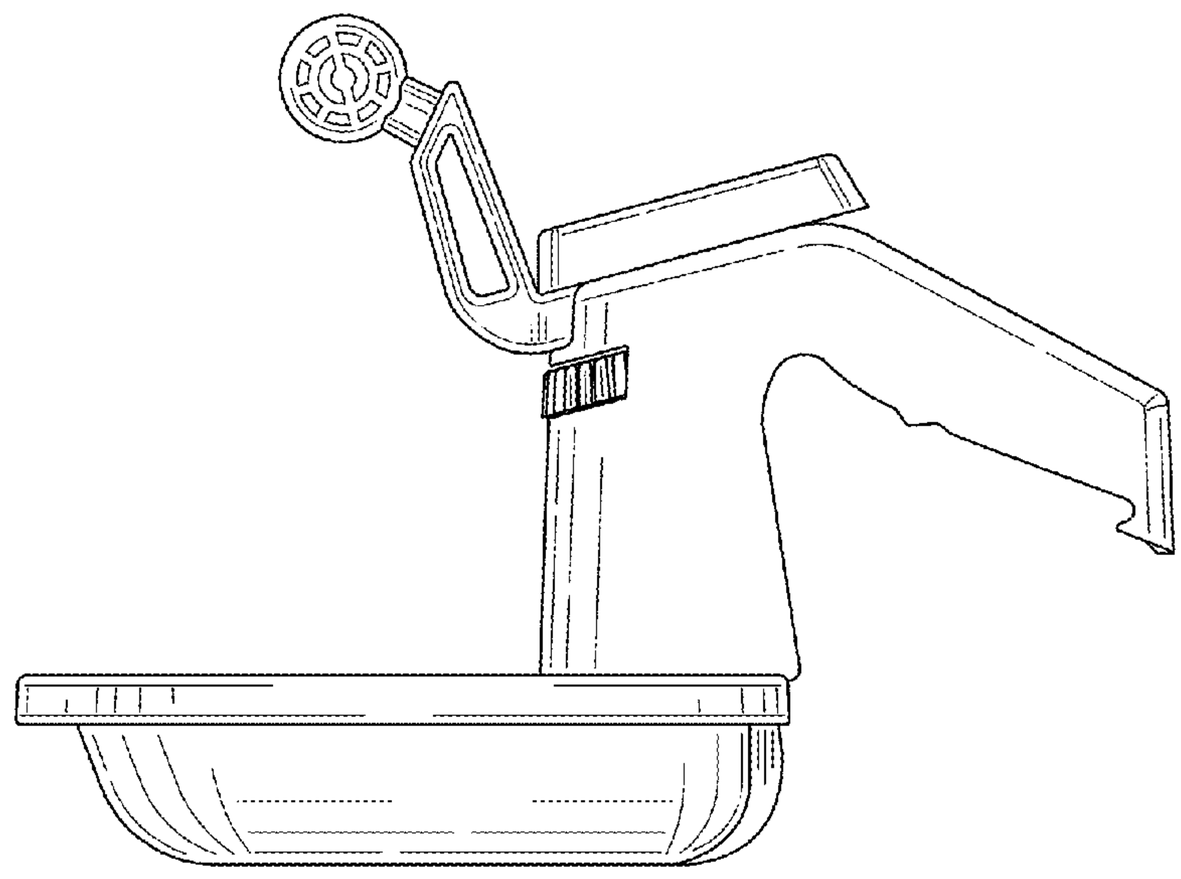

FIG. 2

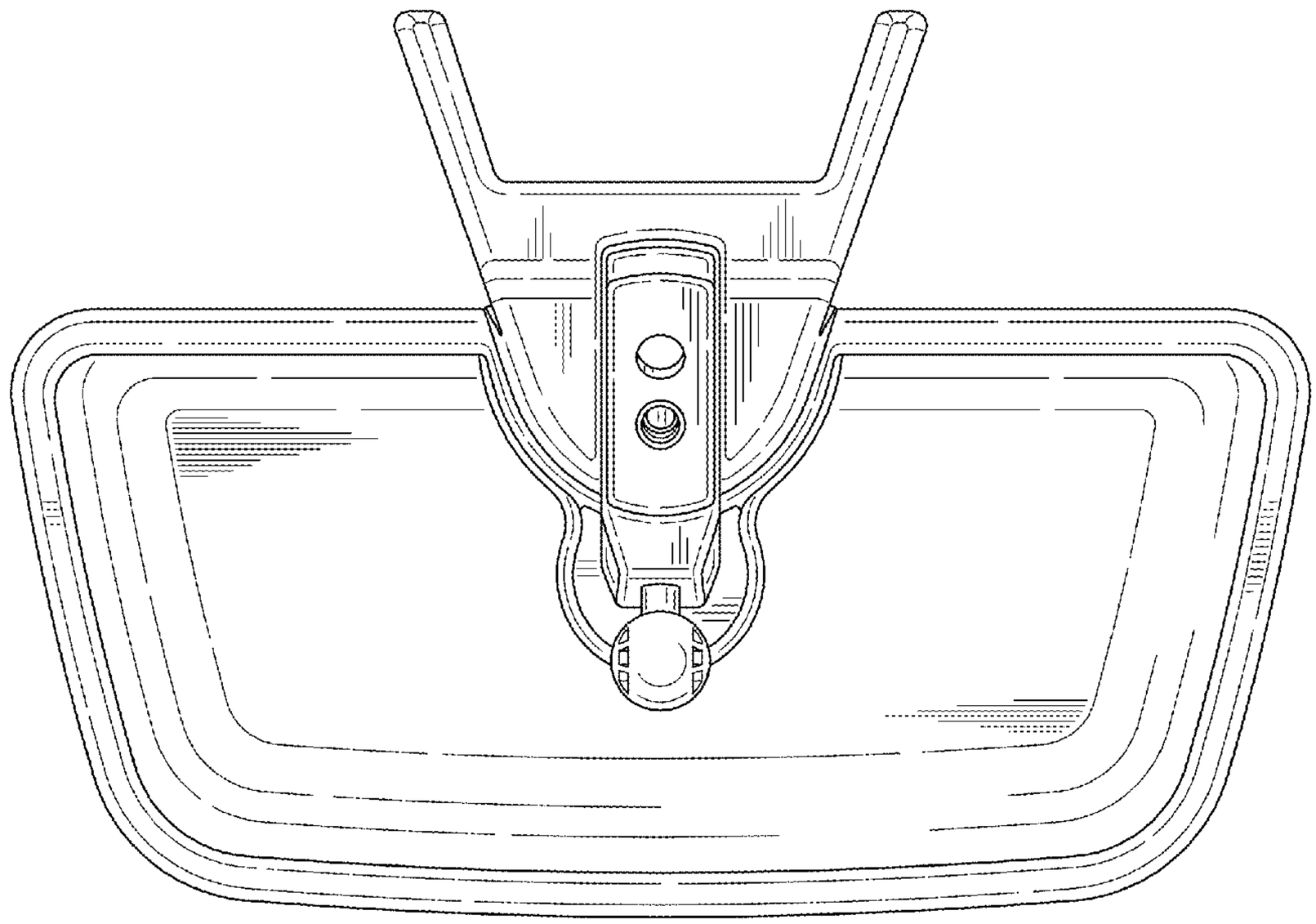

FIG. 3

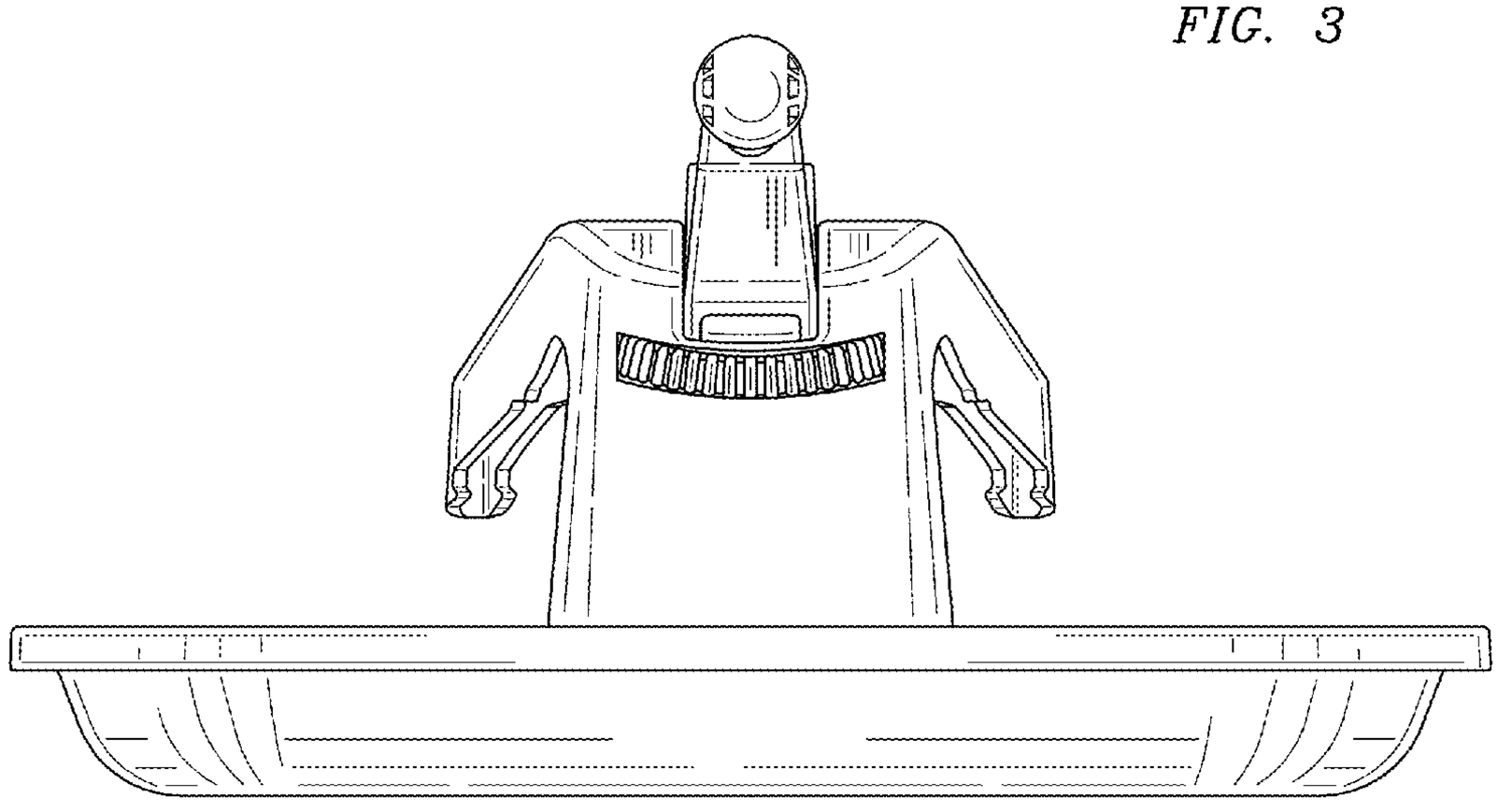

FIG. 4

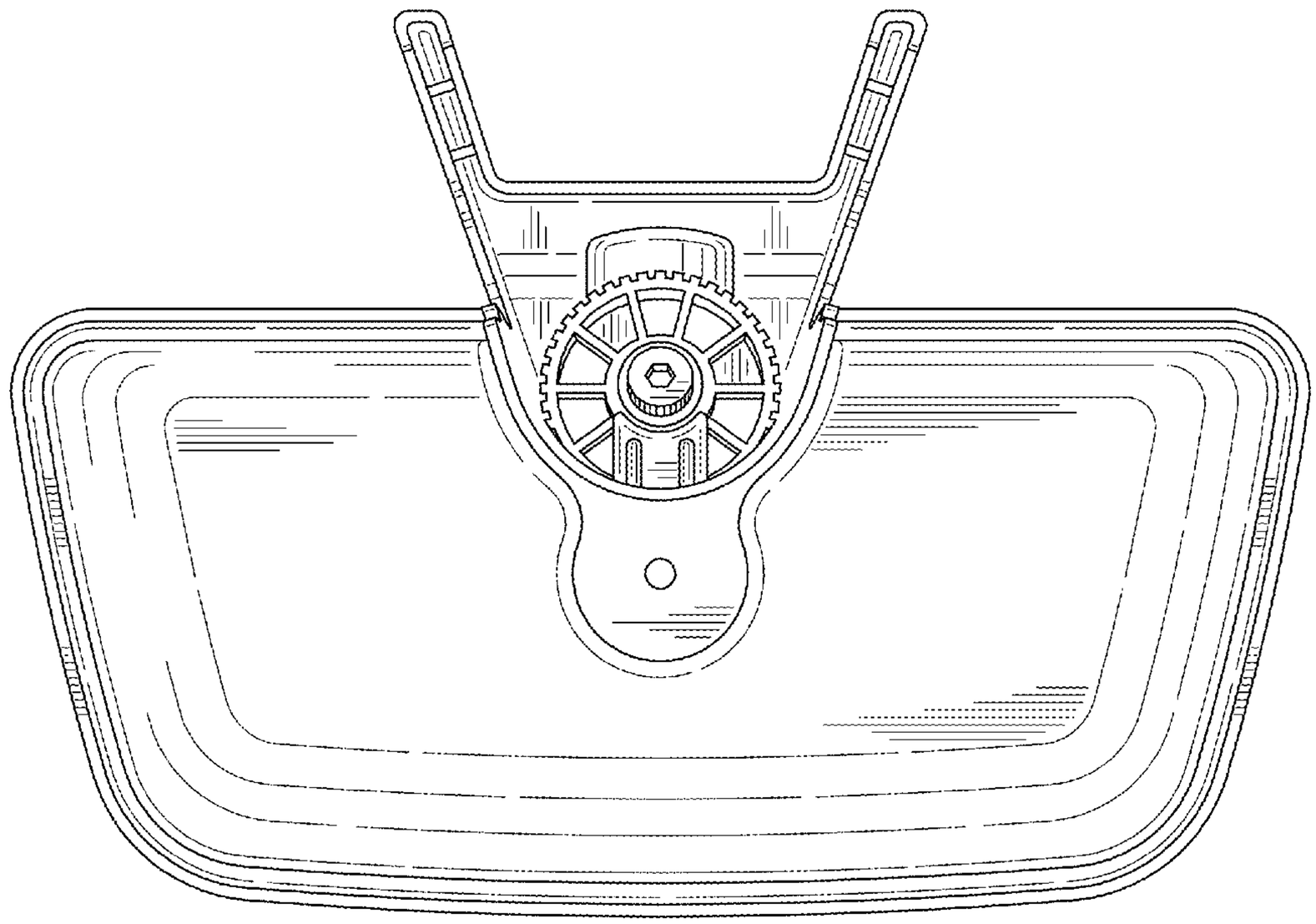

FIG. 5

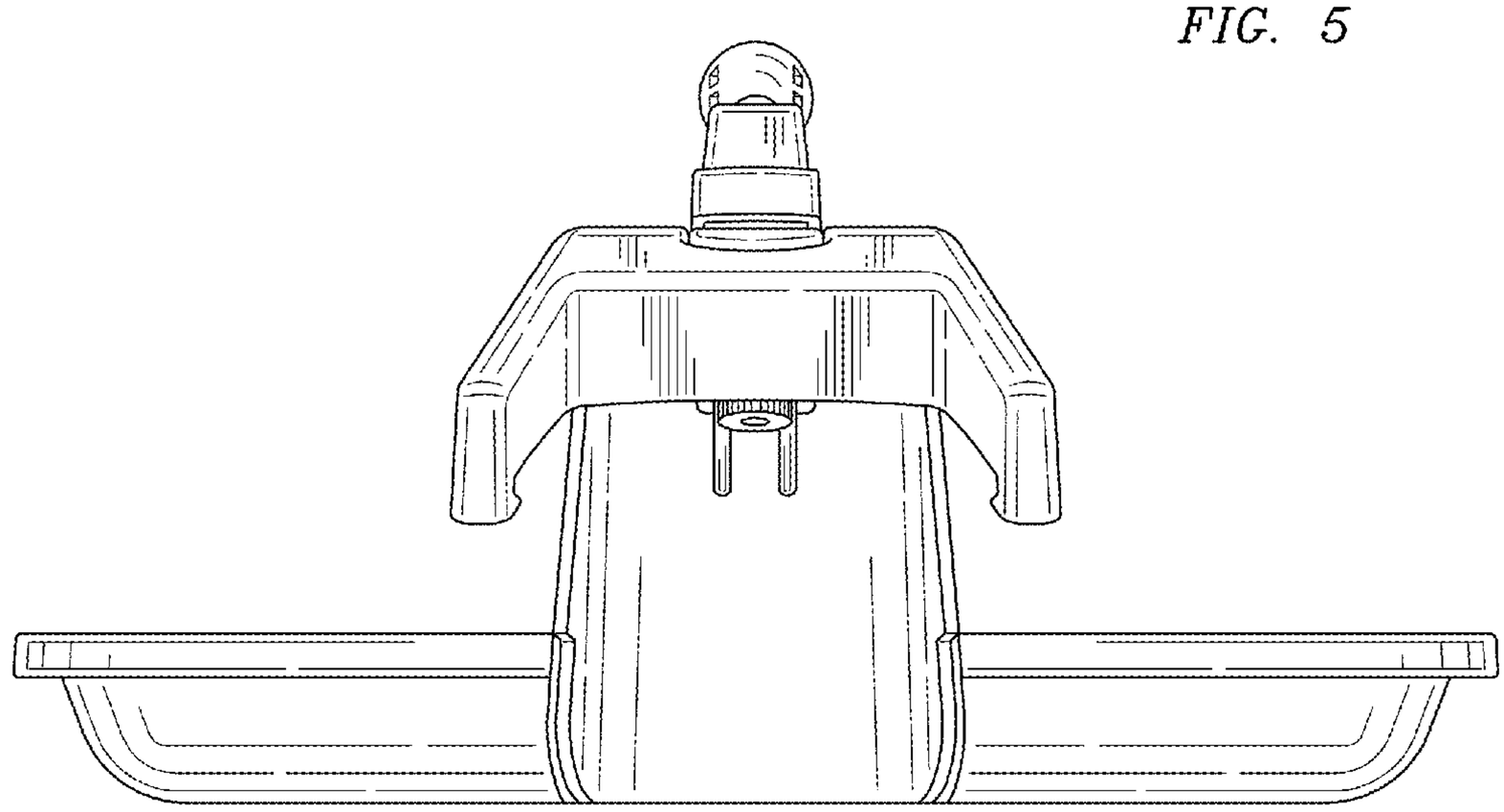

FIG. 6

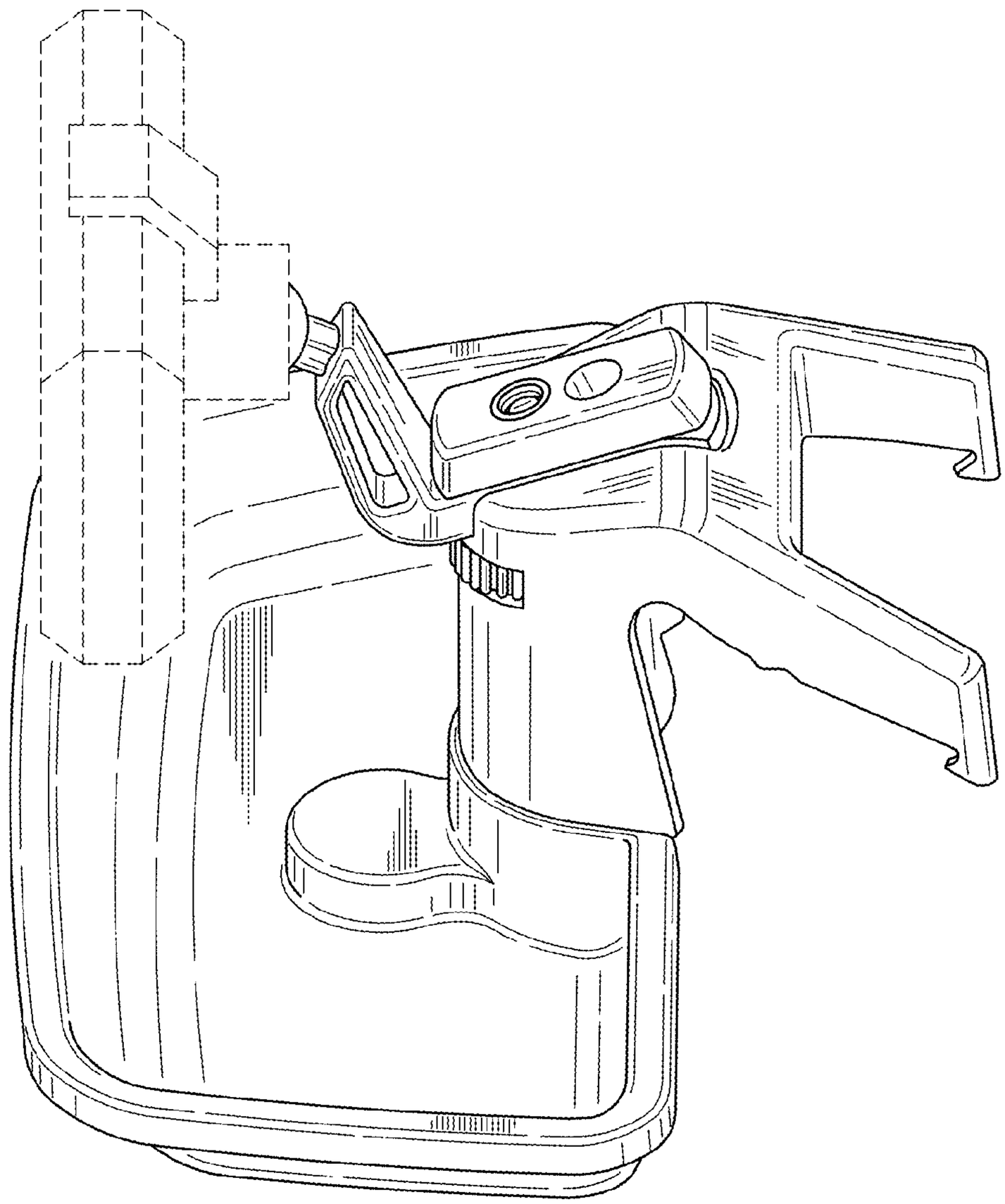

FIG. 7

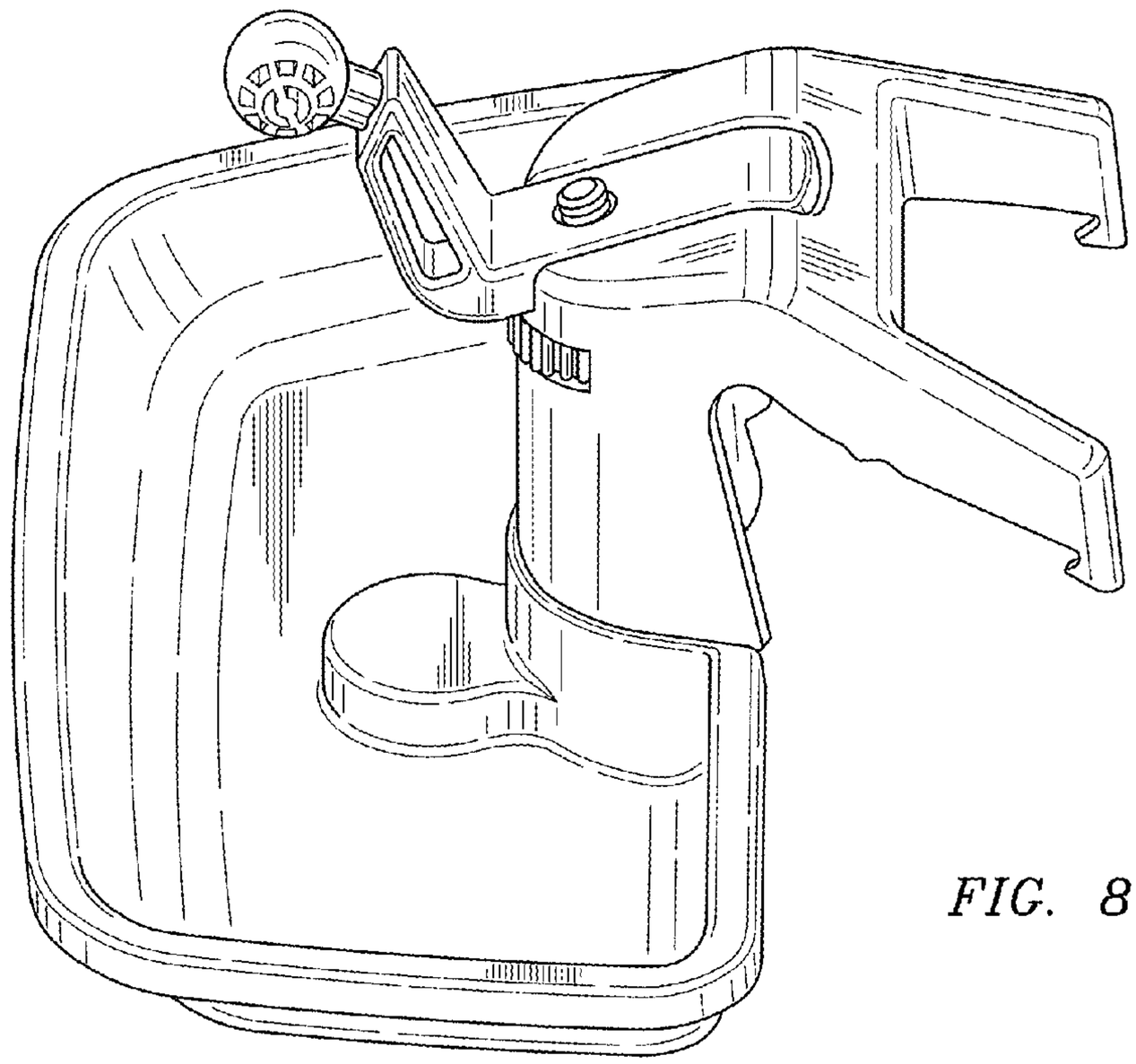

FIG. 8

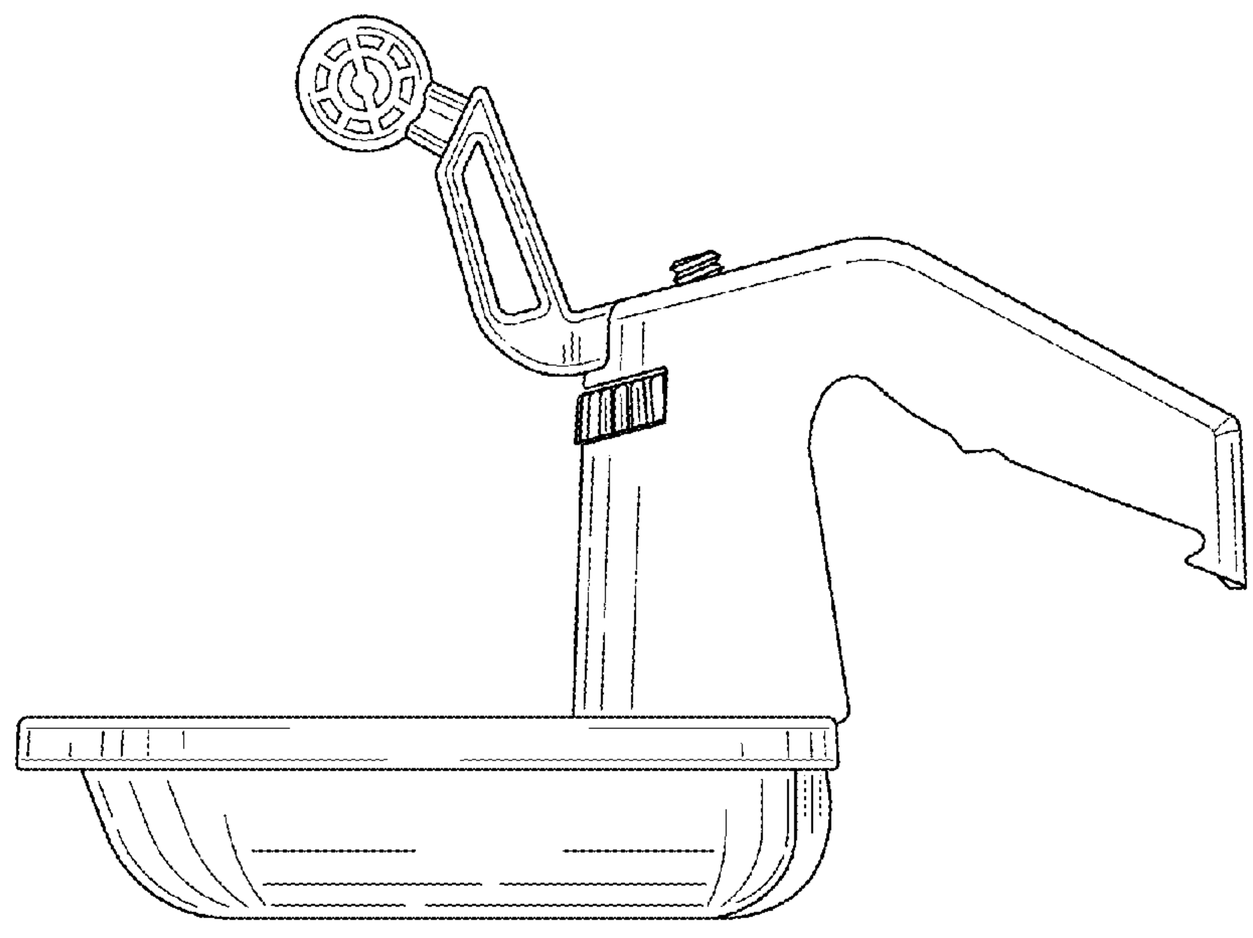

FIG. 9

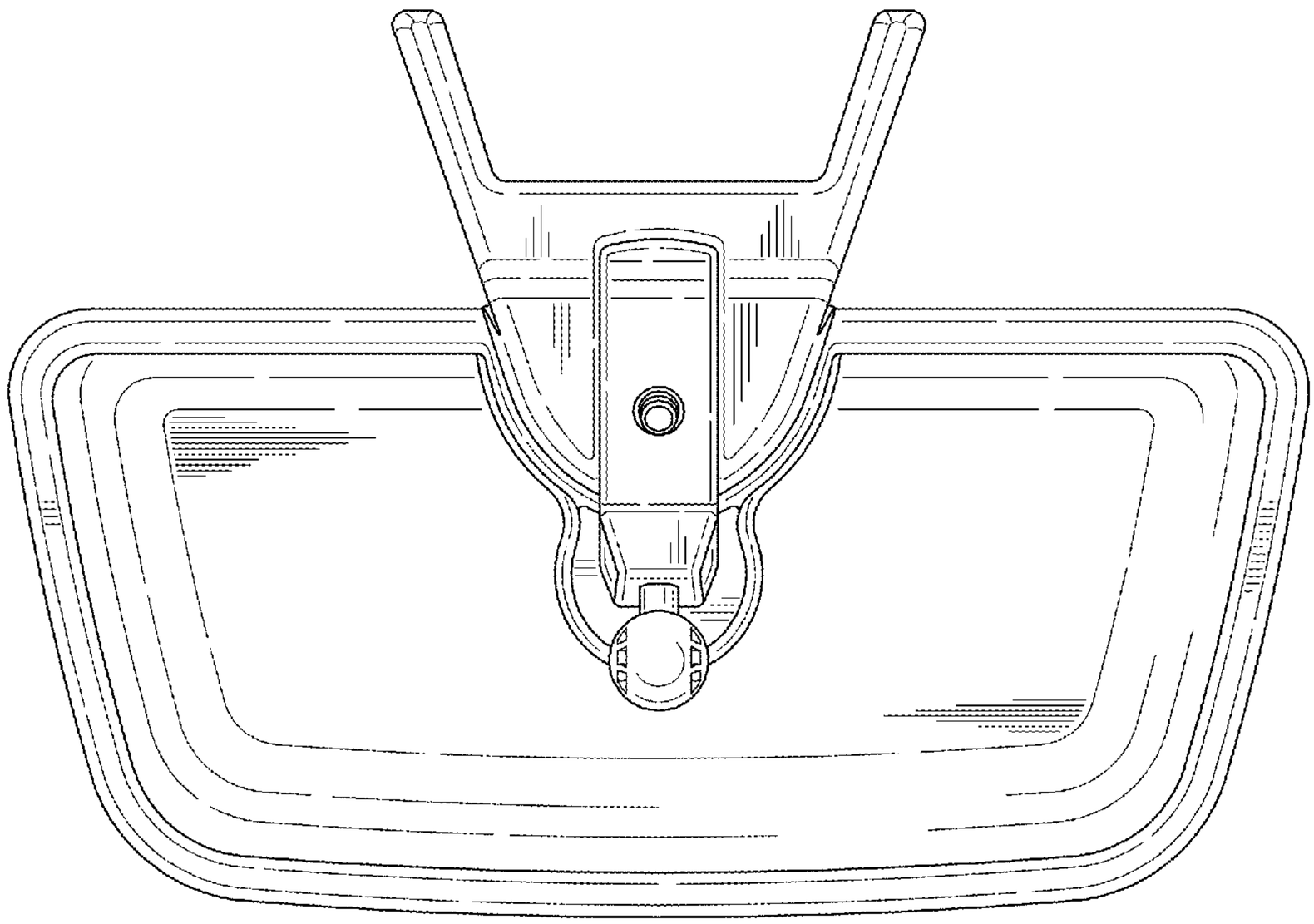

FIG. 10

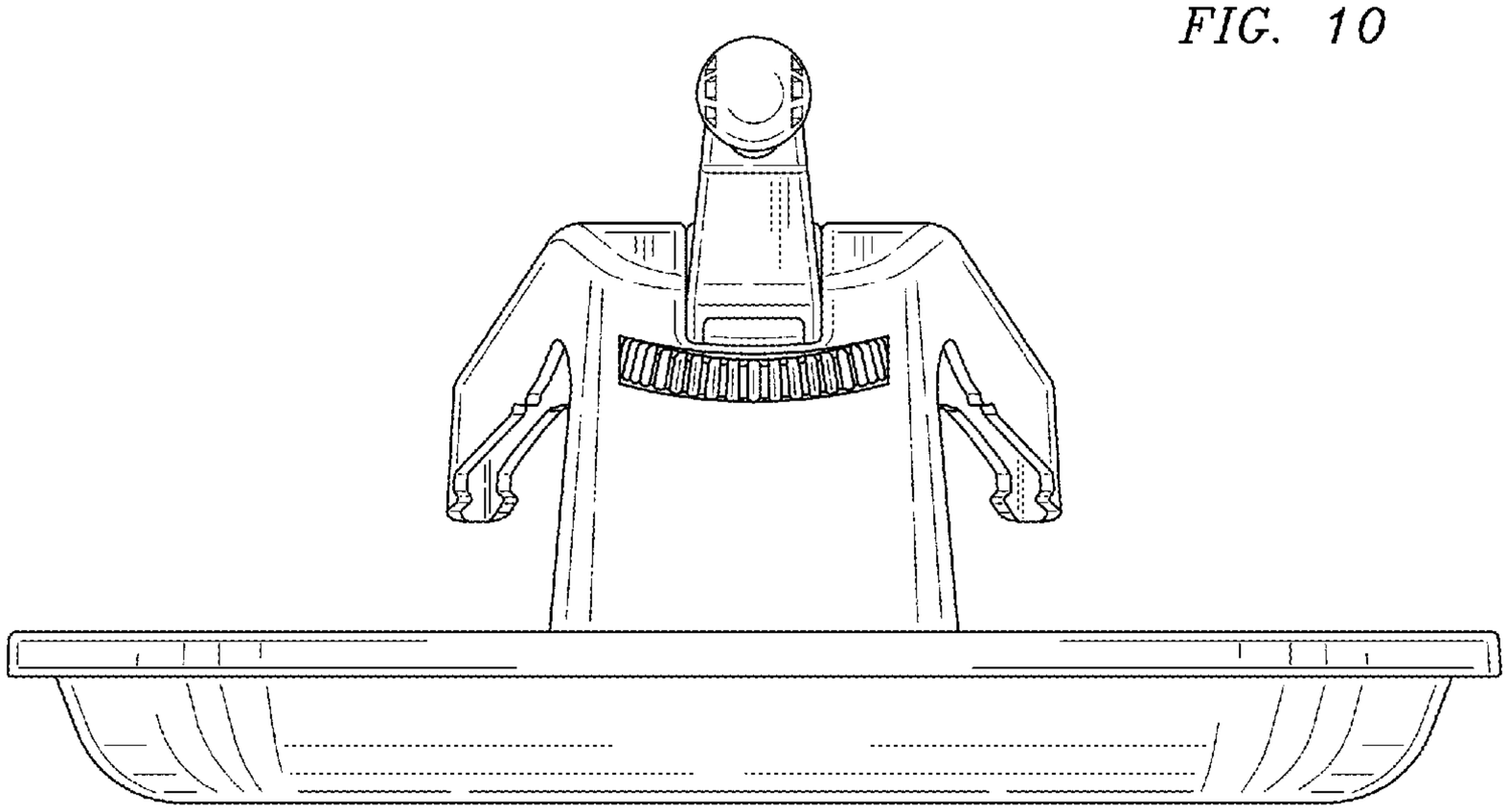

FIG. 11

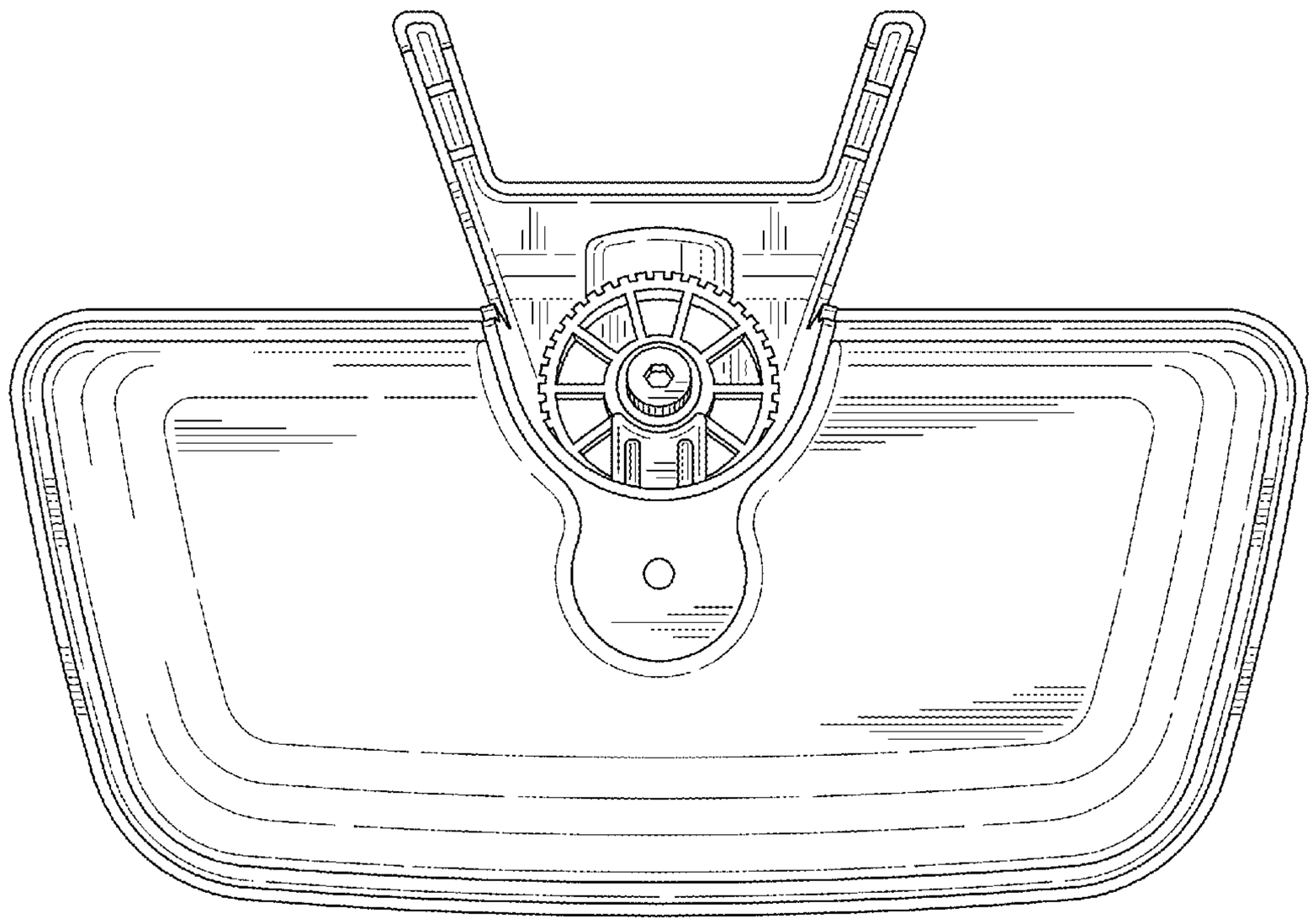

FIG. 12

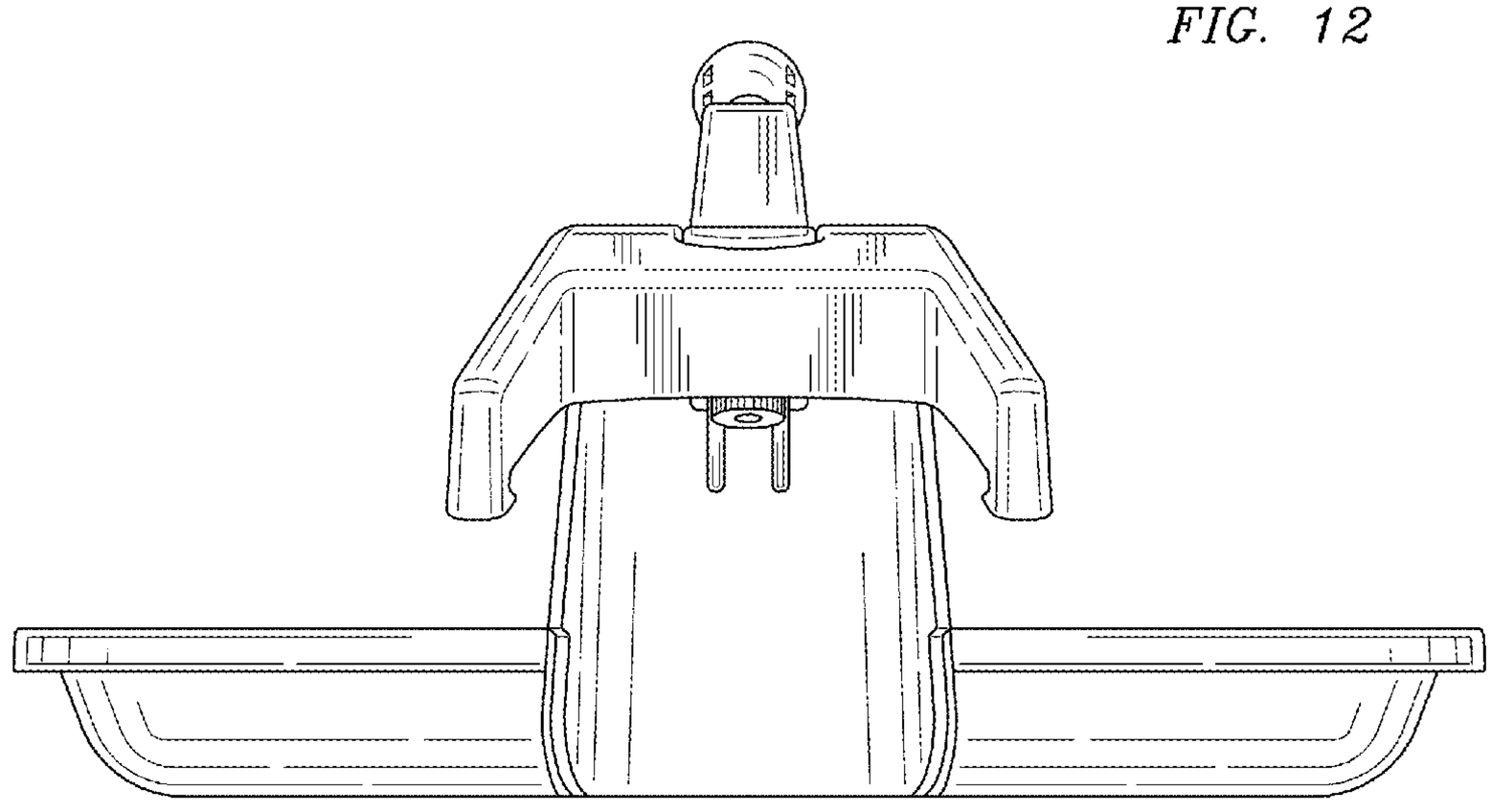

FIG. 13

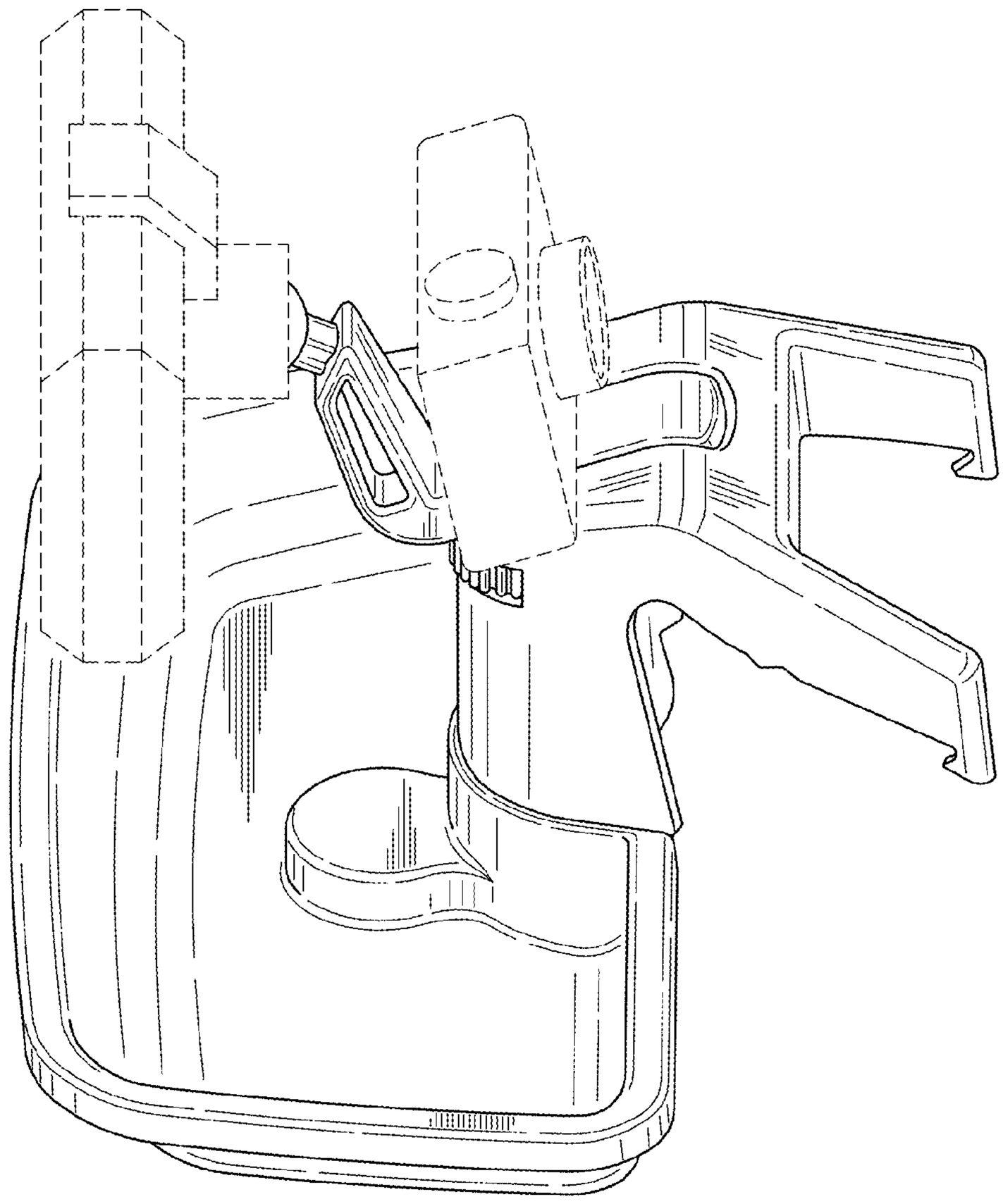

FIG. 14