US00D764229S

(12) United States Design Patent
Chung et al.

(10) Patent No.: US D764,229 S
(45) Date of Patent: ** Aug. 23, 2016

(54) **MICROWAVE OVEN**

(71) Applicant: **LG ELECTRONICS INC.**, Seoul (KR)

(72) Inventors: **Jae Hun Chung**, Seoul (KR); **In Hwan Ryu**, Seoul (KR); **Sang Woo Kim**, Seoul (KR)

(73) Assignee: **LG ELECTRONICS INC.**, Seoul (KR)

(**) Term: **14 Years**

(21) Appl. No.: **29/525,202**

(22) Filed: **Apr. 28, 2015**

(30) **Foreign Application Priority Data**

Nov. 13, 2014 (KR) 30-2014-0054716

(51) **LOC (10) Cl.** **07-02**

(52) **U.S. Cl.**
USPC **D7/405**

(58) **Field of Classification Search**
USPC D7/402, 403–408, 351, 350.4, D7/350.1–350.3, 323, 339–340, 346–349, D7/394
CPC H05B 6/763; H05B 6/6414; H05B 6/6408; Y02B 40/14; Y02B 40/143; Y02B 40/146; F24C 15/02; F24C 1/00; F24C 14/00; F24C 3/00; F24C 5/00; F24C 7/00
See application file for complete search history.

(56) **References Cited**

U.S. PATENT DOCUMENTS

D295,356 S * 4/1988 Nambu D7/351
D352,866 S * 11/1994 Kindley D7/351
D535,141 S * 1/2007 Lee D7/351
D535,516 S * 1/2007 Lee D7/351
D603,210 S * 11/2009 Davis D7/350.1
D646,111 S * 10/2011 Kim D7/348
D651,034 S * 12/2011 Eades D7/323
D651,036 S * 12/2011 Kim D7/349
D653,071 S * 1/2012 Kim D7/349
D708,469 S * 7/2014 Kim D7/351
9,220,362 B2 * 12/2015 Eades A47J 27/004

OTHER PUBLICATIONS

Whirlpool Countertop Microwave, review by—pat, Buzzillions [online], published Nov. 16, 2011, [retrieved on Mar. 8, 2016]. Retrieved from the Internet <URL: http://www.buzzillions.com/reviews/whirlpool-0-5-cu-ft-countertop-microwave-add-30- seconds-option-reviews#readReviews>.*

* cited by examiner

Primary Examiner — Sheryl Lane
Assistant Examiner — Nicole Shiflet
(74) *Attorney, Agent, or Firm* — Birch, Stewart, Kolasch & Birch, LLP

(57) **CLAIM**

We claim the ornamental design for a microwave oven, as shown and described.

DESCRIPTION

FIG. **1** is a perspective view of a microwave oven showing our new design;
FIG. **2** is a front elevation view thereof;
FIG. **3** is a rear elevation view thereof;
FIG. **4** is a left side elevation view thereof;
FIG. **5** is a right side elevation view thereof;
FIG. **6** is a top plan view thereof;
FIG. **7** is a bottom plan view thereof; and,
FIG. **8** is a perspective view of a microwave oven, showing a second embodiment of our new design.
The broken lines in the drawing figures are included for the purpose of illustrating environment and form no part of the claimed design. FIG. **8** is the only view showing the second embodiment. Therefore, the second embodiment includes only what is shown in FIG. **8**.

1 Claim, 5 Drawing Sheets

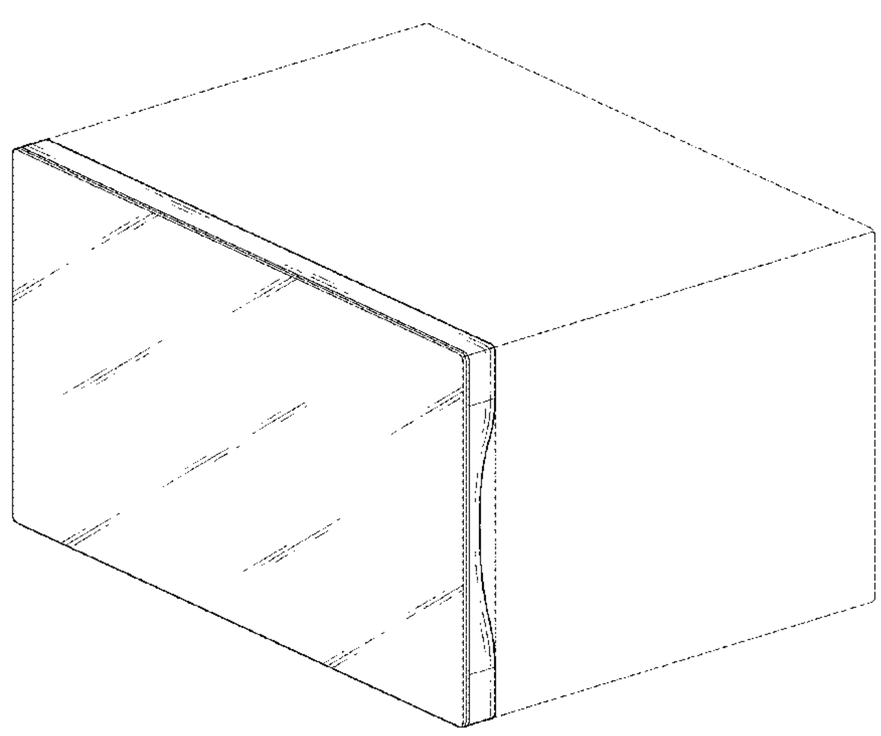

FIG. 1

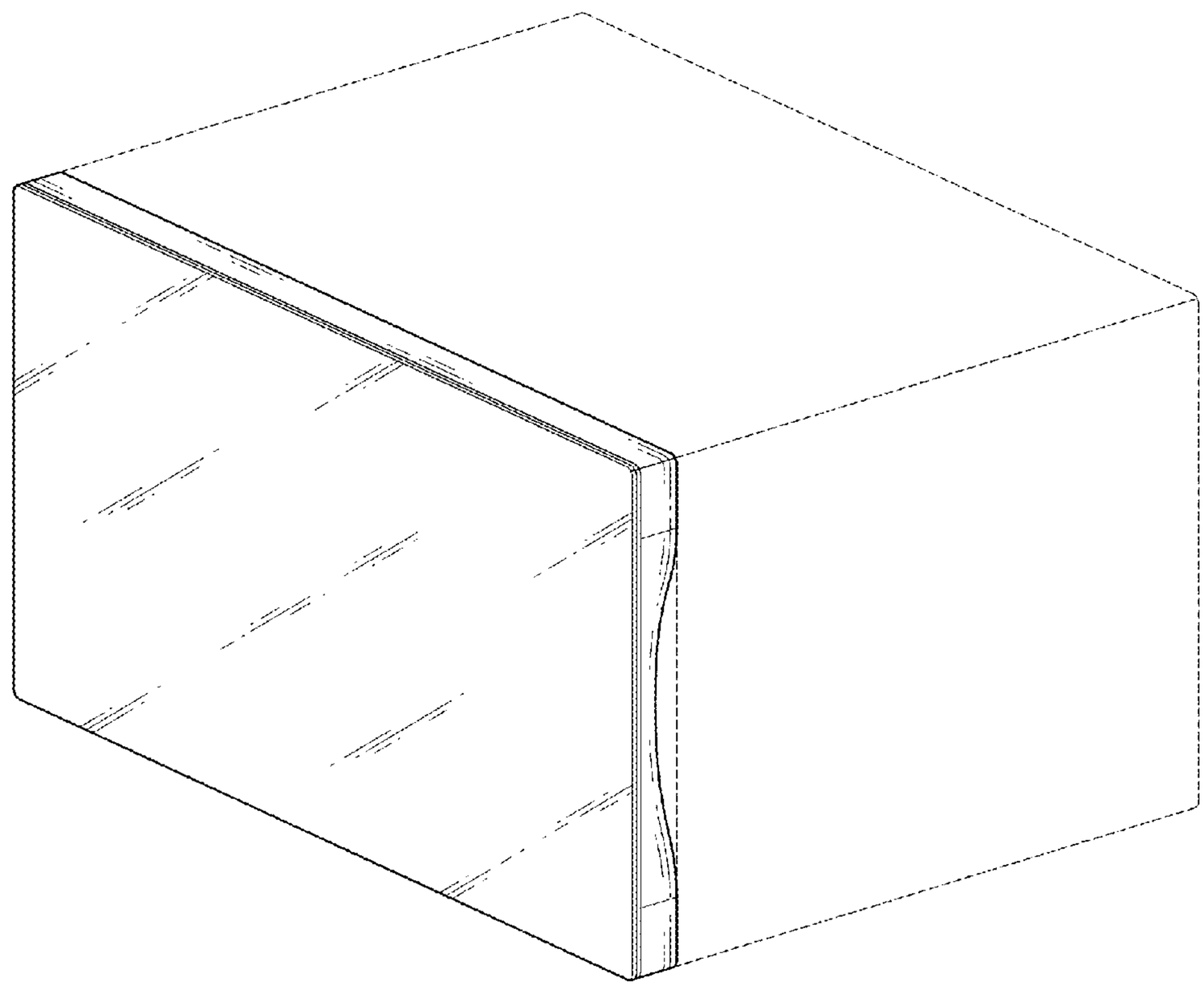

FIG.2

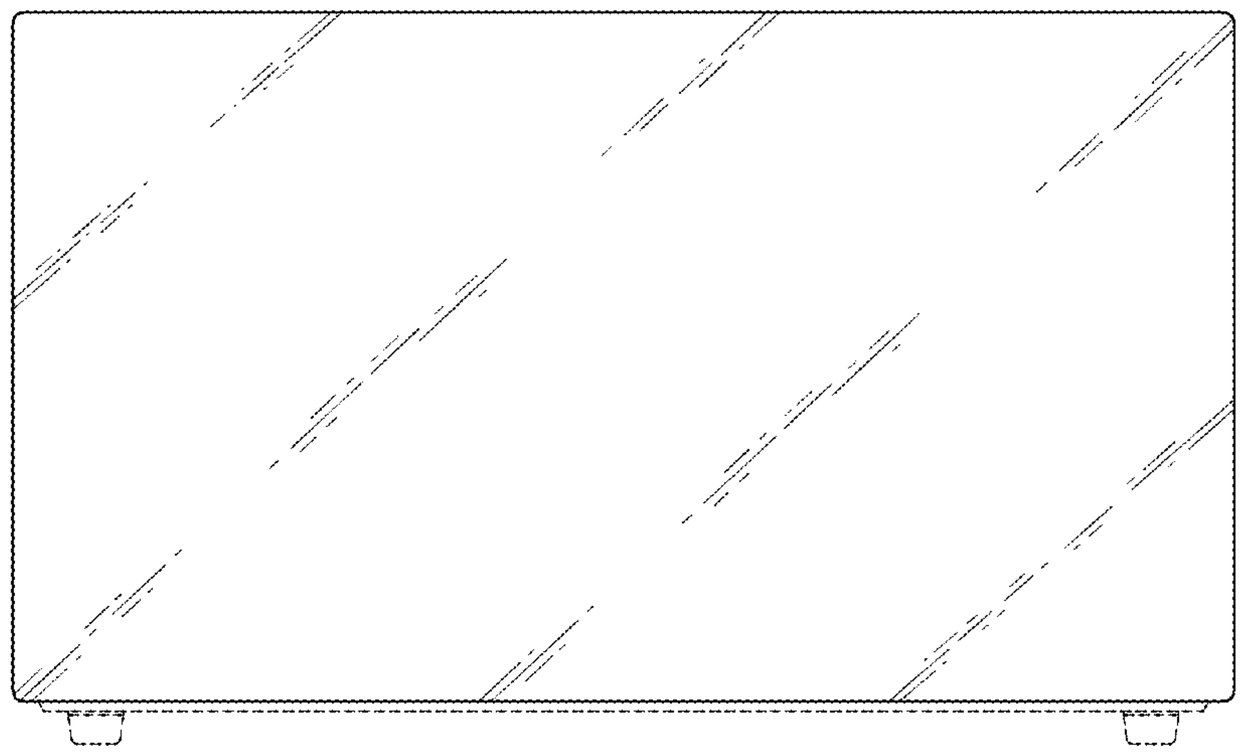

FIG.3

FIG.4

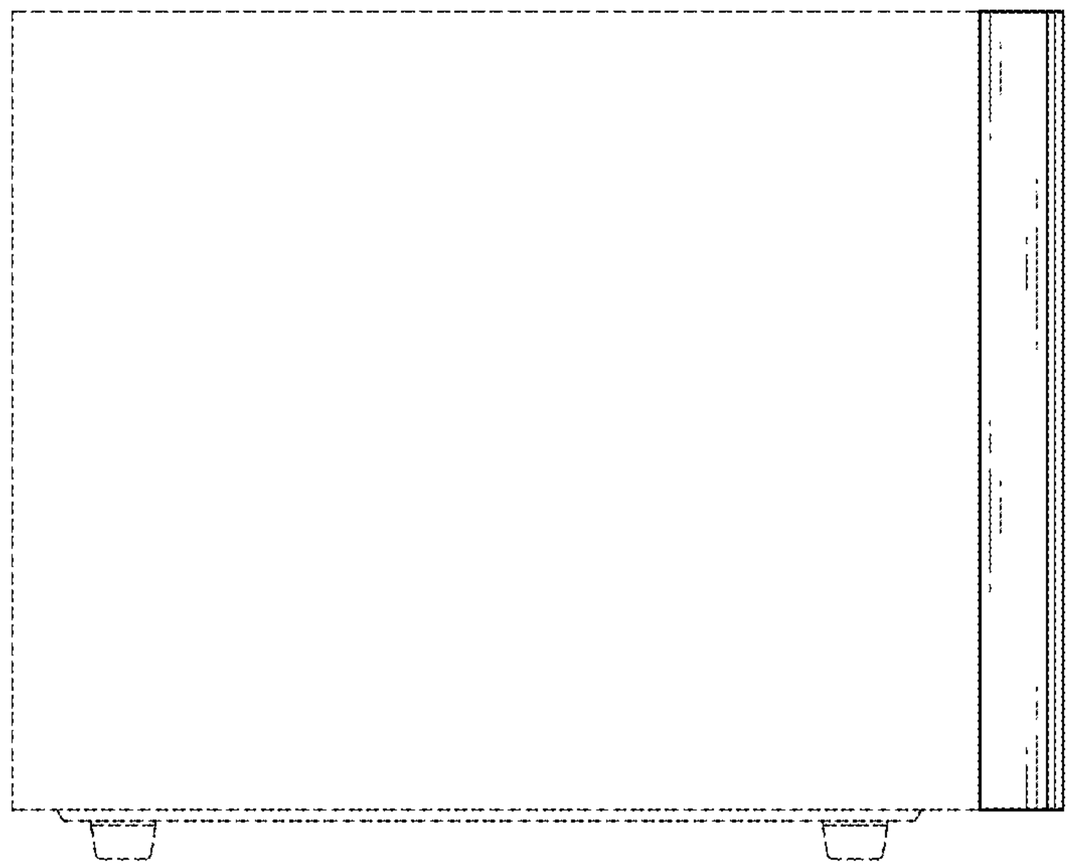

FIG.5

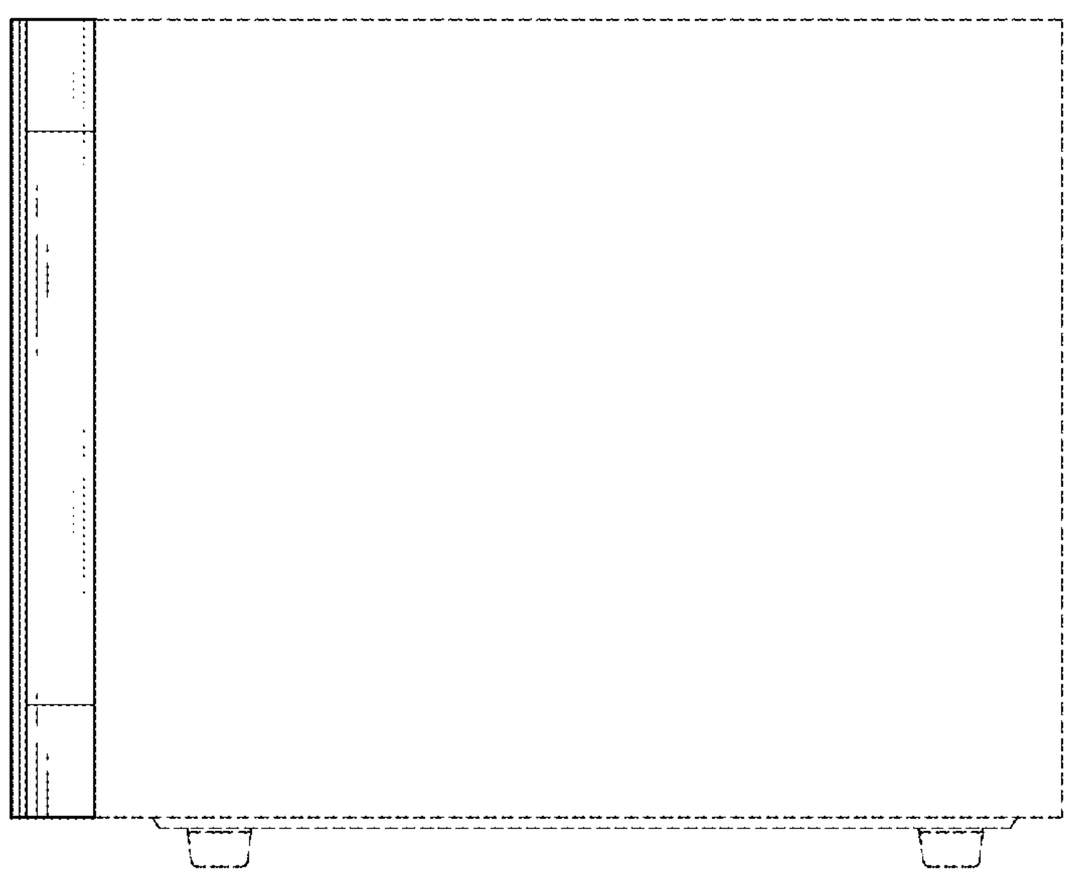

FIG.6

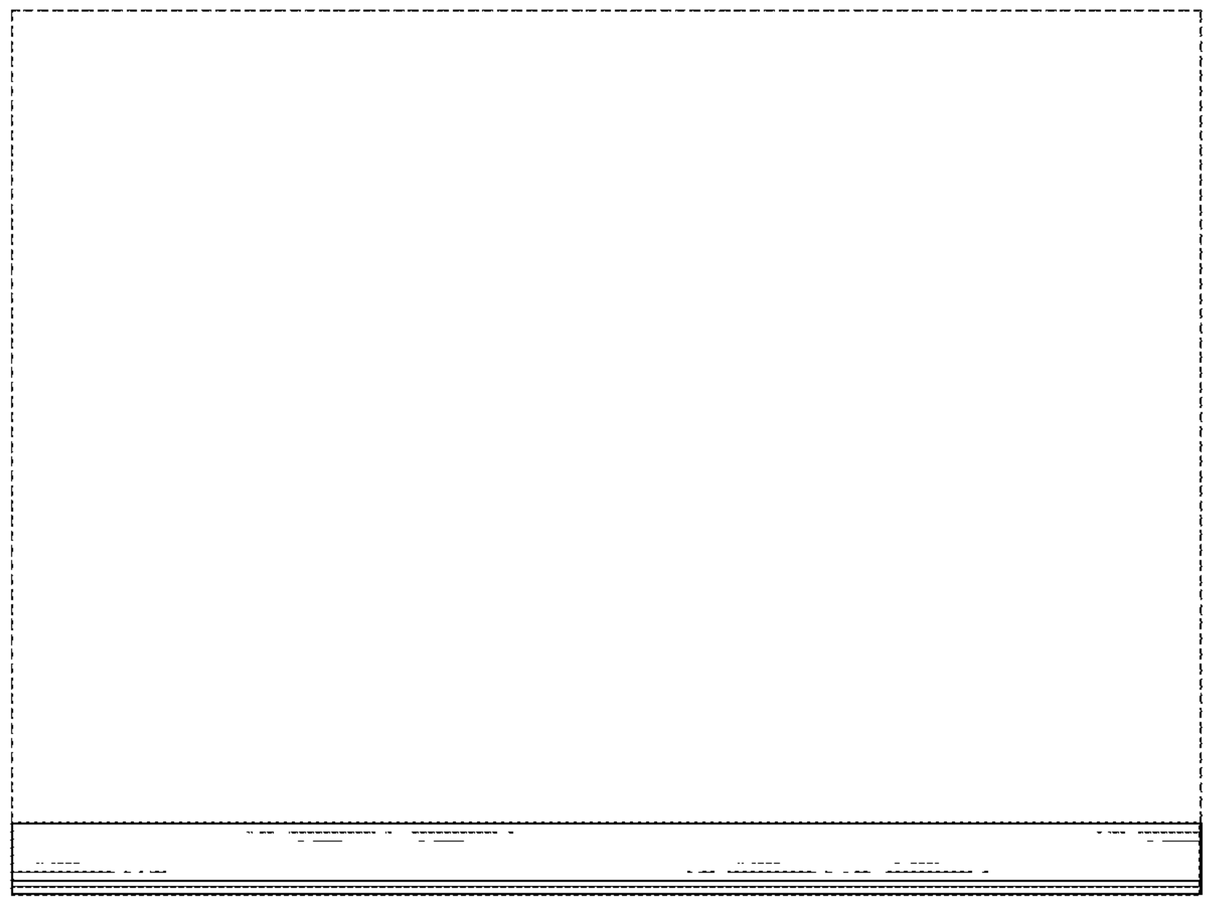

FIG.7

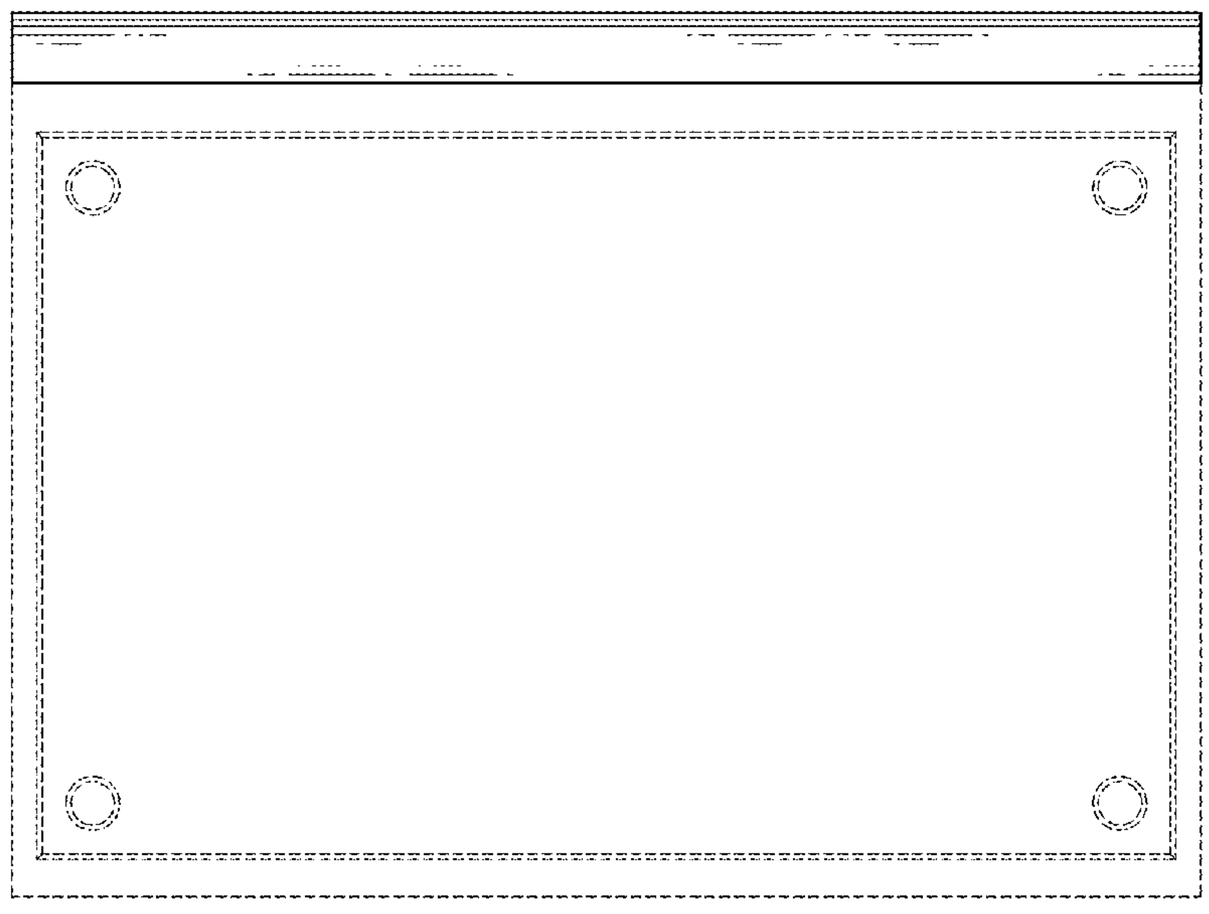
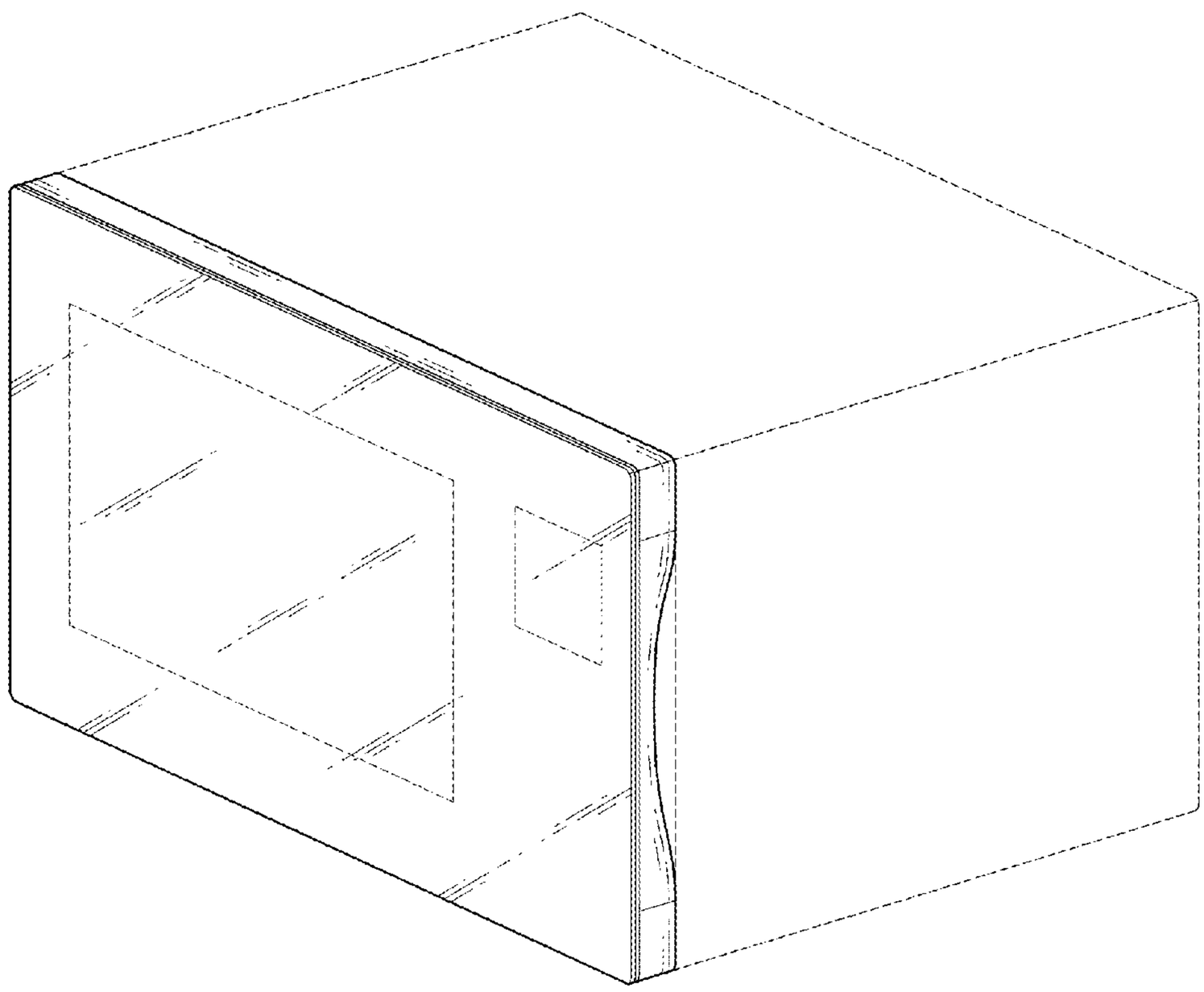
FIG.8