US00D762599S

(12) United States Design Patent

Moon et al.

(10) Patent No.: US D762,599 S
(45) Date of Patent: ** Aug. 2, 2016

(54) **TELEVISION RECEIVER**

(71) Applicant: **Samsung Electronics Co., Ltd.**, Suwon-si (KR)

(72) Inventors: **Sin-Wi Moon**, Seogwipo-Si (KR); **Sung-Jin Ann**, Seoul (KR)

(73) Assignee: **Samsung Electronics Co., Ltd.**, Suwon-si (KR)

(**) Term: **14 Years**

(21) Appl. No.: **29/511,537**

(22) Filed: **Dec. 11, 2014**

(30) **Foreign Application Priority Data**

Jun. 19, 2014 (KR) 30-2014-0030014

(51) **LOC (10) Cl.** **14-03**

(52) **U.S. Cl.**
USPC **D14/126**

(58) **Field of Classification Search**
USPC D14/125–134, 239, 371, 136, 374–377, D14/440, 450, 448, 336, 342, 159; 312/7.2; 348/836, 838, 180, 184, 325, 739; 248/917–924, 465; 345/104, 133, 156, 345/168, 87, 173; D21/329, 515, 577, 622, D21/333, 433, 448, 452, 450, 331, 505; D10/15, 26; 446/484, 175, 356; D6/477, 479, 300; D20/10, 19, 39
CPC ... G06F 1/1601; G06F 1/1643; H05K 5/0004; H05K 5/0017; H05K 5/02; H05K 5/0217; H04N 13/0459
See application file for complete search history.

(56) **References Cited**

U.S. PATENT DOCUMENTS

D564,990	S	*	3/2008	Ueno	D14/126
D615,508	S	*	5/2010	Kumano	D14/126
D615,509	S	*	5/2010	Song	D14/126
D615,542	S	*	5/2010	Oikawa	D14/336
D656,914	S	*	4/2012	Shin	D14/126
D667,008	S	*	9/2012	Oikawa	D14/374
D690,674	S	*	10/2013	Lu	D14/126
D738,339	S	*	9/2015	Seo	D14/126
D742,344	S	*	11/2015	Kim	D14/126
D744,442	S	*	12/2015	Kim	D14/126

* cited by examiner

Primary Examiner — Raphael Barkai
(74) *Attorney, Agent, or Firm* — NSIP Law

(57) **CLAIM**

We claim the ornamental design for a television receiver, as shown and described.

DESCRIPTION

FIG. **1** is a front perspective view of a television receiver showing our new design;
FIG. **2** is a front view thereof;
FIG. **3** is a rear view thereof;
FIG. **4** is a left-side view thereof;
FIG. **5** is a right-side view thereof;
FIG. **6** is a top view thereof;
FIG. **7** is a bottom view thereof;
FIG. **8** is an enlarged cross-sectional view taken through the horizontal center of the dot-dot-dash encircled portion in FIG. **6**;
FIG. **9** is another front perspective view of FIG. **1**; and,
FIG. **10** is an enlarged view of the encircled portion in FIG. **9**.
The broken lines in the figures show portions of the television receiver which form no part of the claimed design.
The dot-dot-dash broken lines encircling portions of the claimed design that are illustrated in enlargements form no part of the claimed design.
The dot-dash lines in the figures represent an unclaimed boundary line and form no part of the claimed design.

1 Claim, 7 Drawing Sheets

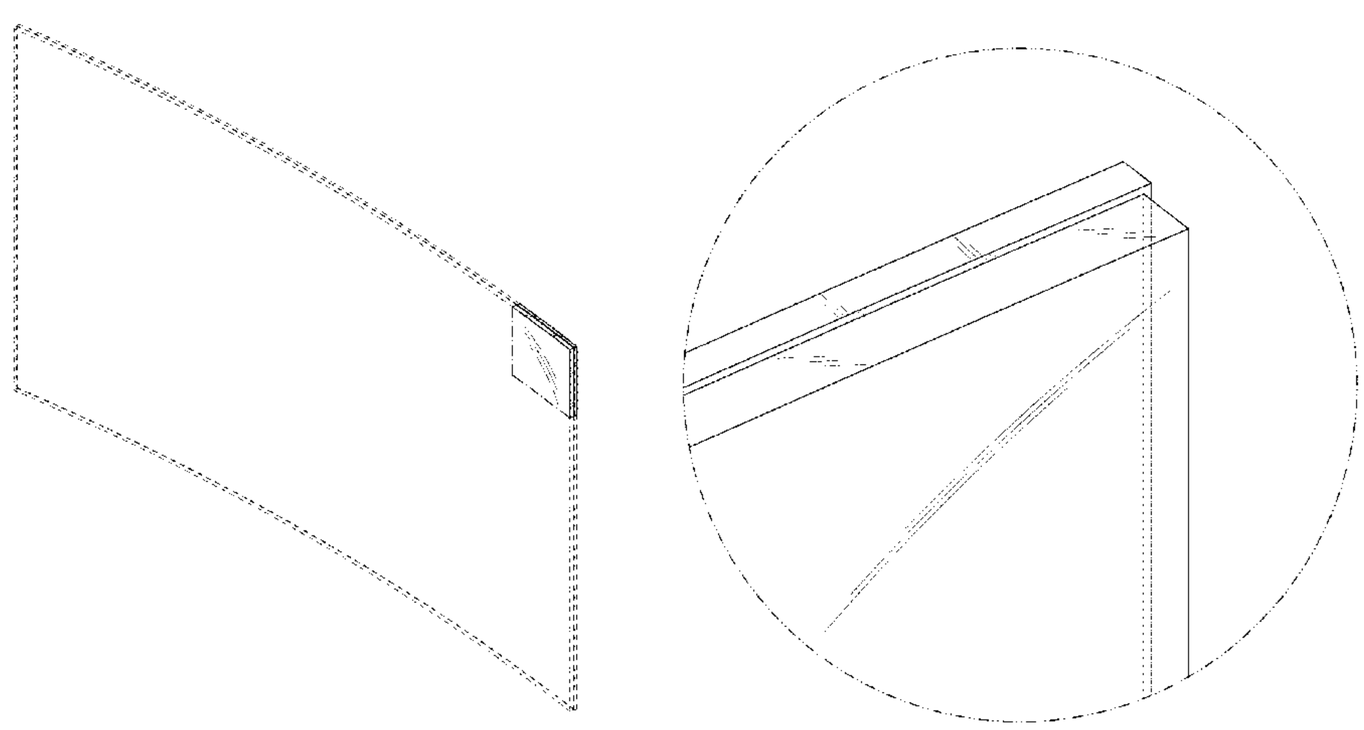

FIG. 1

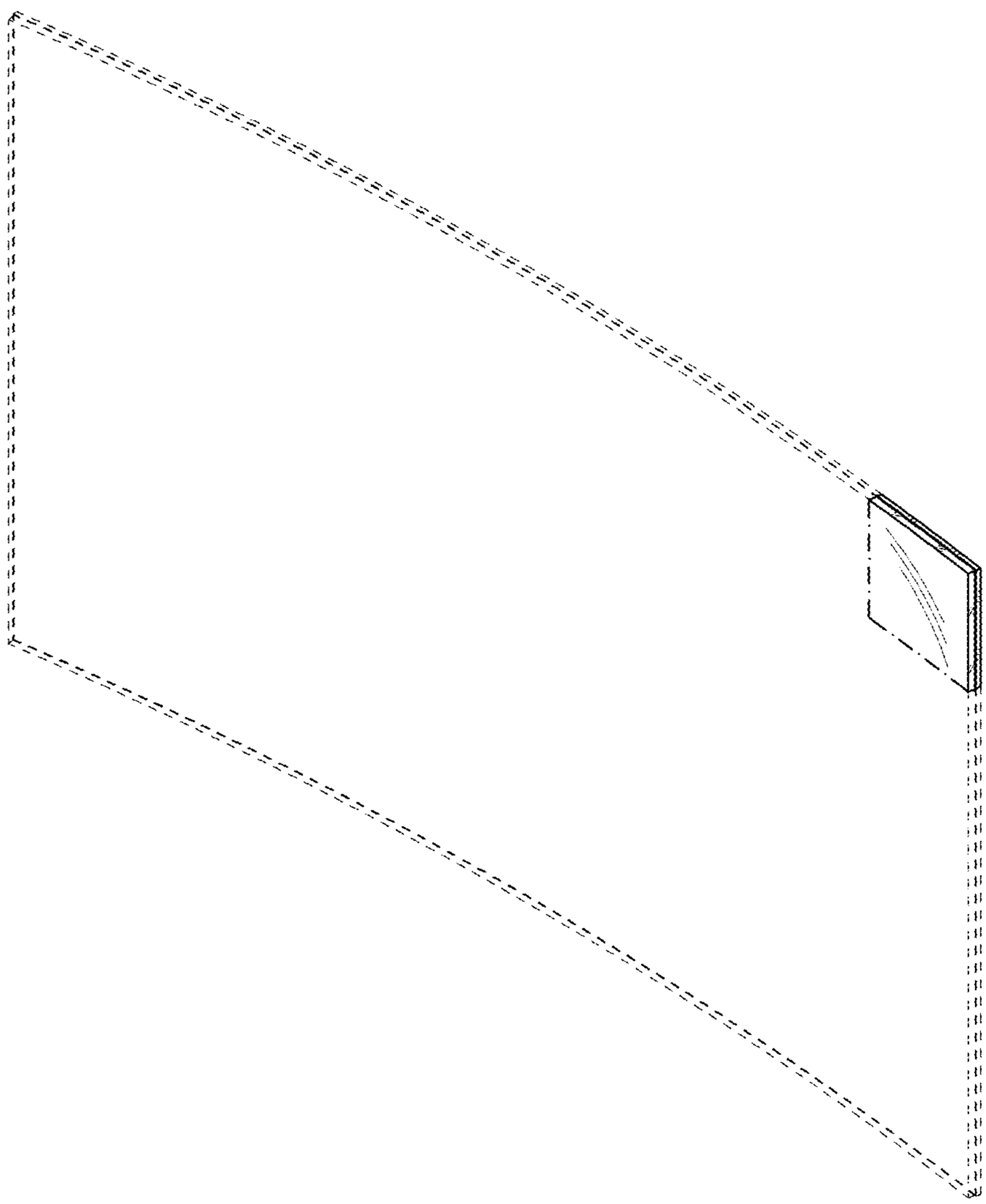

FIG. 2

FIG. 3

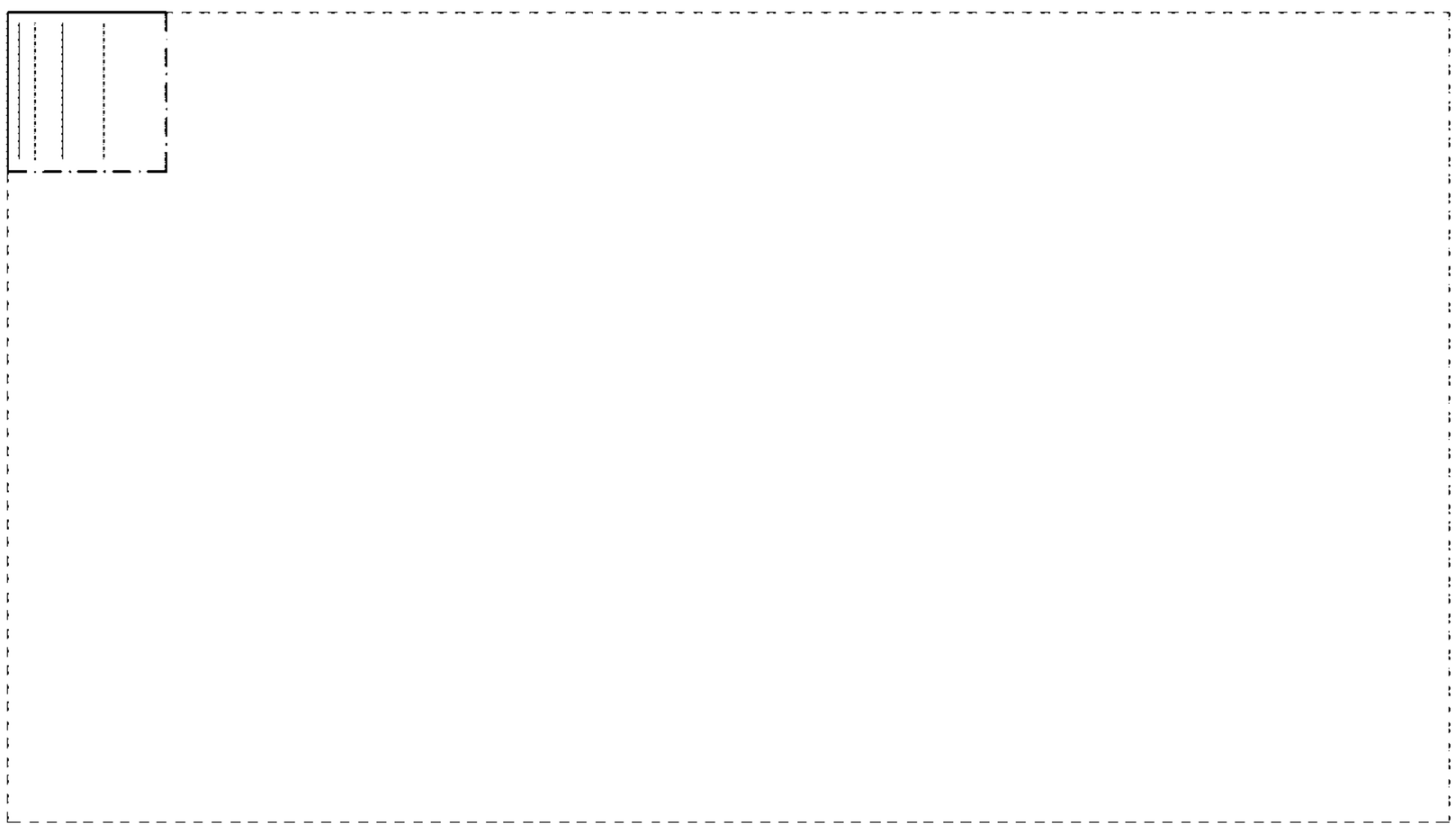

FIG. 4

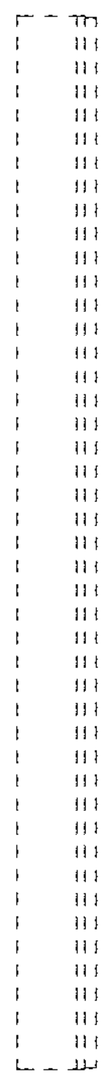

FIG. 5

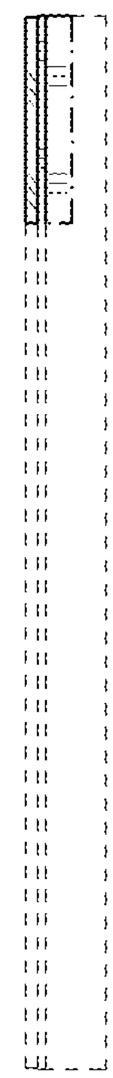

FIG. 6

FIG. 7

FIG. 8

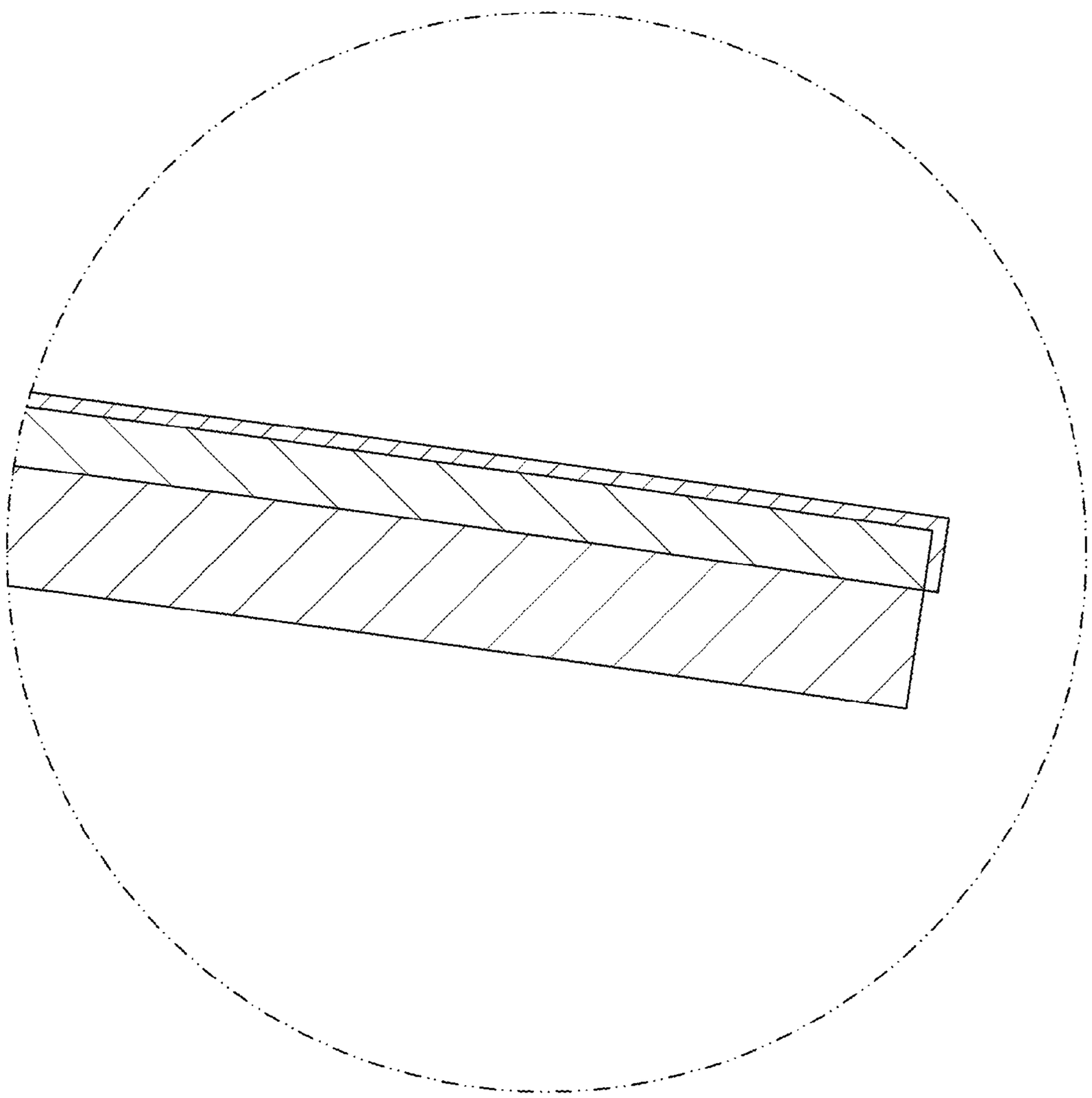

FIG. 9

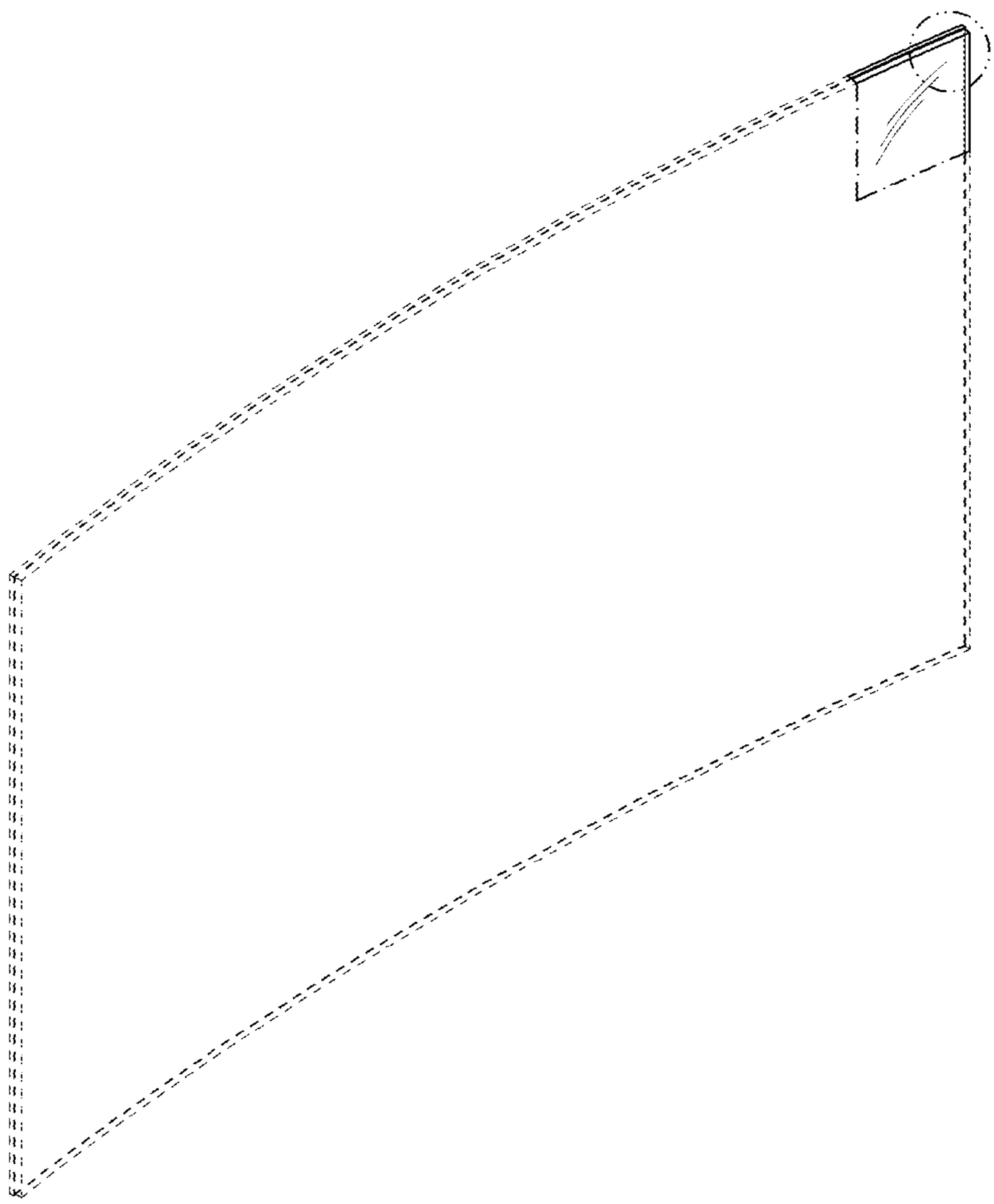
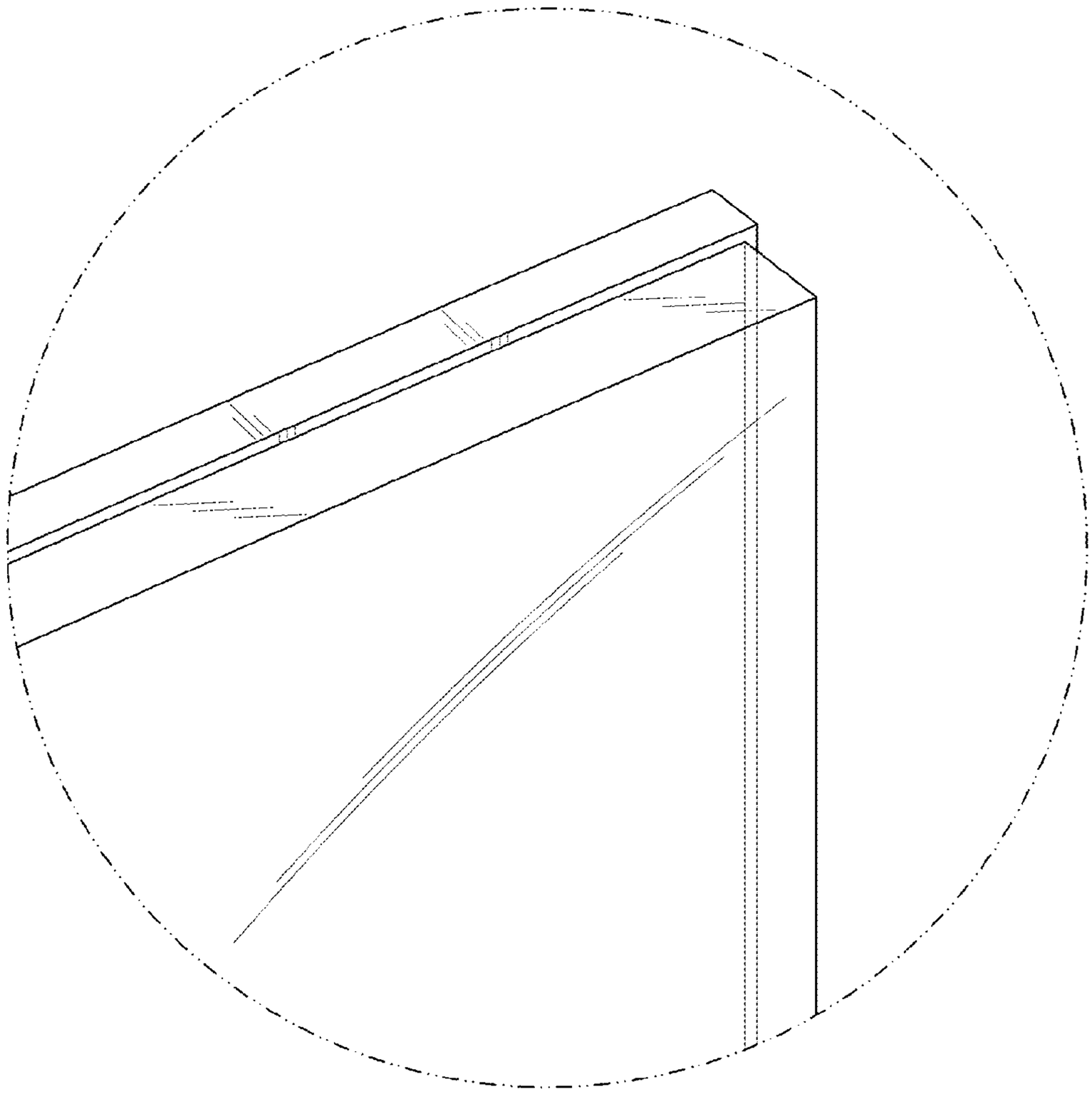
FIG. 10