US00D761629S

(12) United States Design Patent
Suarez

(10) Patent No.: US D761,629 S
(45) Date of Patent: ** Jul. 19, 2016

(54) **CLAM OPENER**

(71) Applicant: **Carlos Suarez**, Hialeah, FL (US)

(72) Inventor: **Carlos Suarez**, Hialeah, FL (US)

(**) Term: **14 Years**

(21) Appl. No.: **29/526,386**

(22) Filed: **May 8, 2015**

(51) **LOC (10) Cl.** **07-04**

(52) **U.S. Cl.**
USPC **D7/693**

(58) **Field of Classification Search**
USPC D7/693, 669, 368; D8/14, 47, 71, 74
CPC .. A22C 29/043; A22C 29/046; A47G 21/062; A47G 21/065
See application file for complete search history.

(56) **References Cited**

U.S. PATENT DOCUMENTS

332,403 A * 12/1885 Leduc A47G 21/062 452/16
2,747,220 A * 5/1956 Thompson A47G 21/062 452/16
3,654,666 A * 4/1972 Lanier A47G 21/062 452/16
3,748,692 A * 7/1973 Valentino A47G 21/062 452/16
4,590,644 A * 5/1986 Maniscalco A47G 21/062 452/16

* cited by examiner

Primary Examiner — Terry Wallace

(57) **CLAIM**

The ornamental design for a clam opener, as shown and described.

DESCRIPTION

FIG. **1** is a perspective view of a clam opener showing my new design;
FIG. **2** is a front elevational view thereof;
FIG. **3** is a rear elevational view thereof;
FIG. **4** is a left side elevational view thereof;
FIG. **5** is a right side elevational view thereof;
FIG. **6** is a top plan view thereof; and,
FIG. **7** is a bottom plan view thereof.

1 Claim, 7 Drawing Sheets

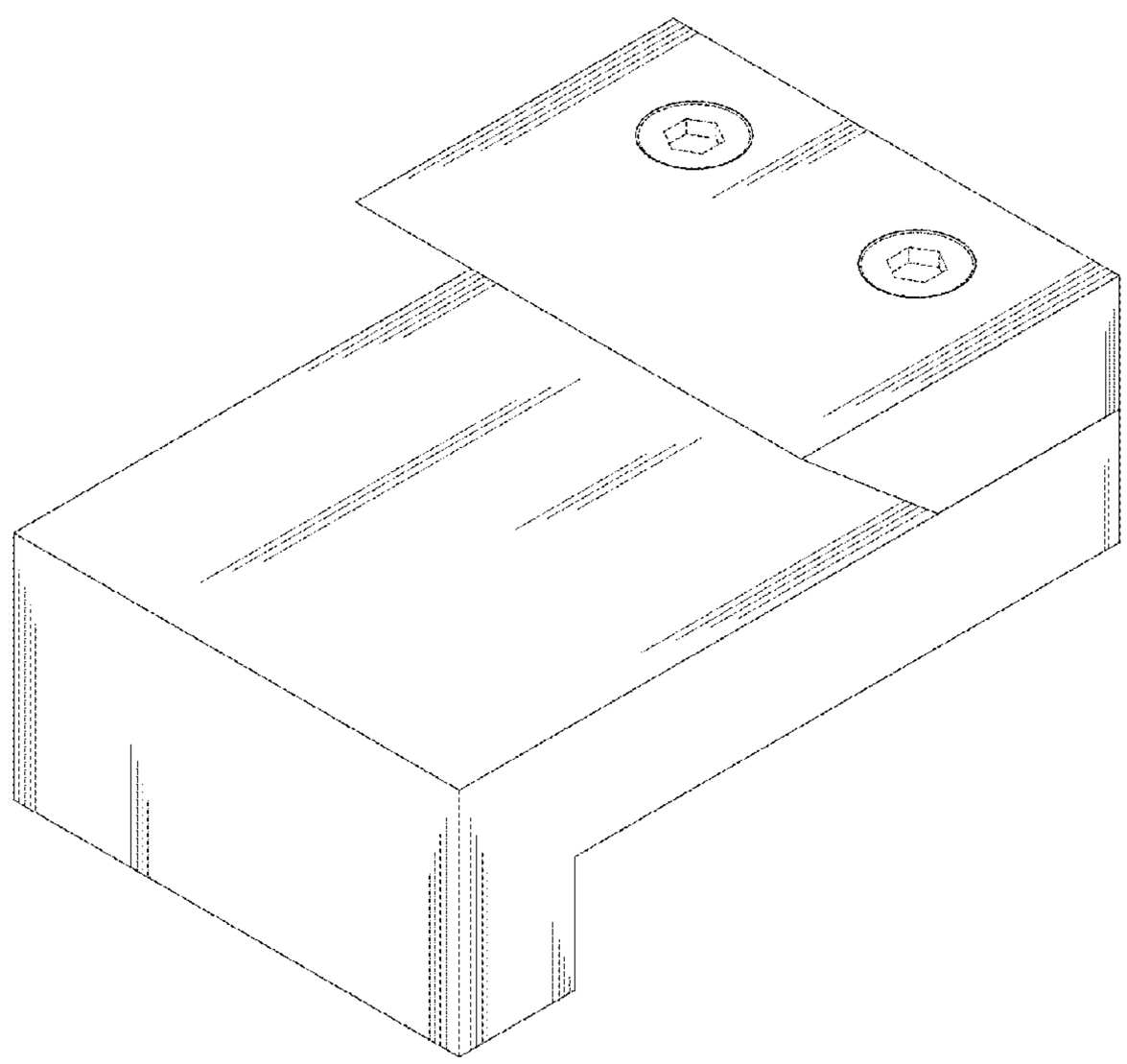

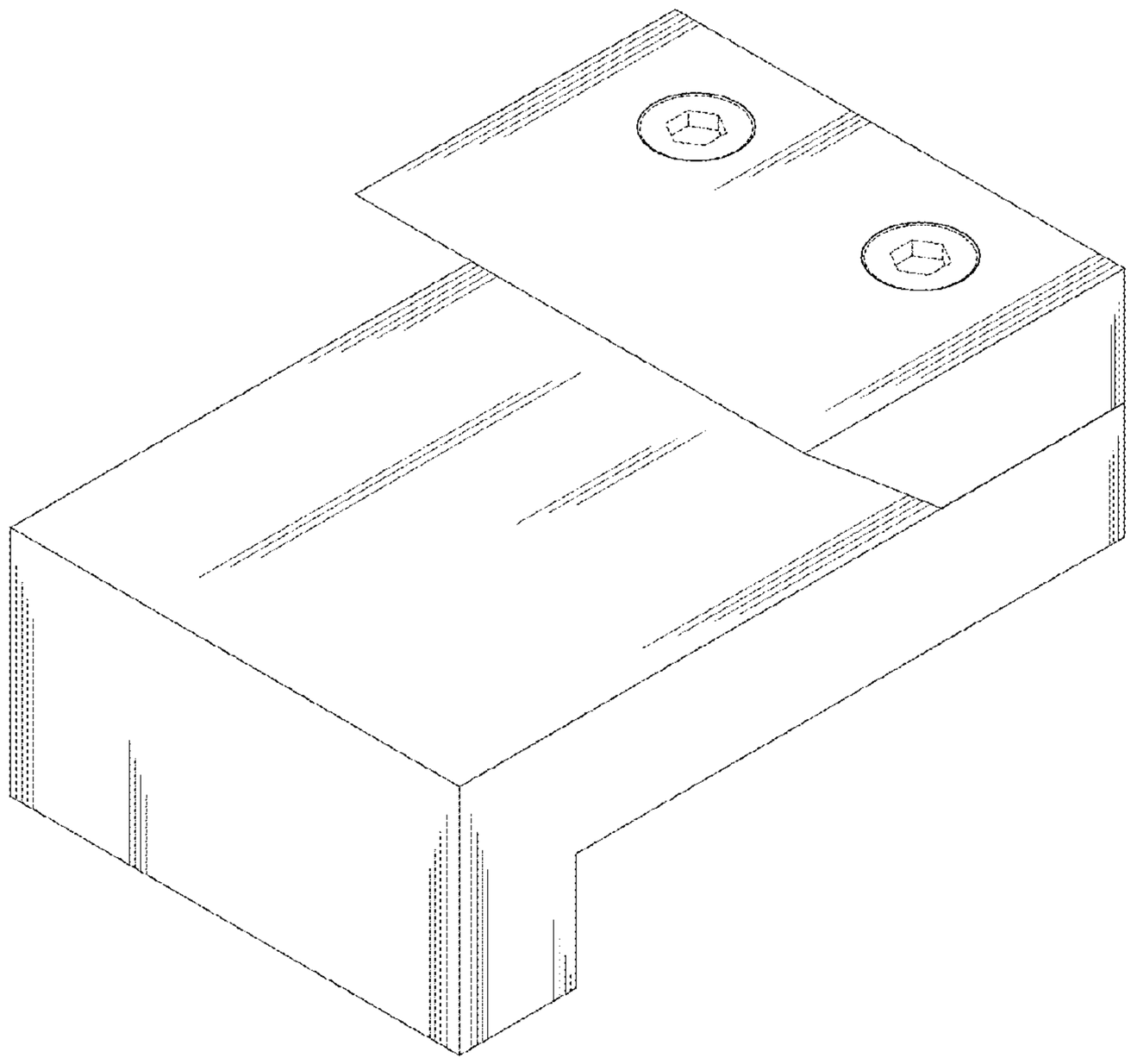

FIG. 1

FIG. 2

FIG. 3

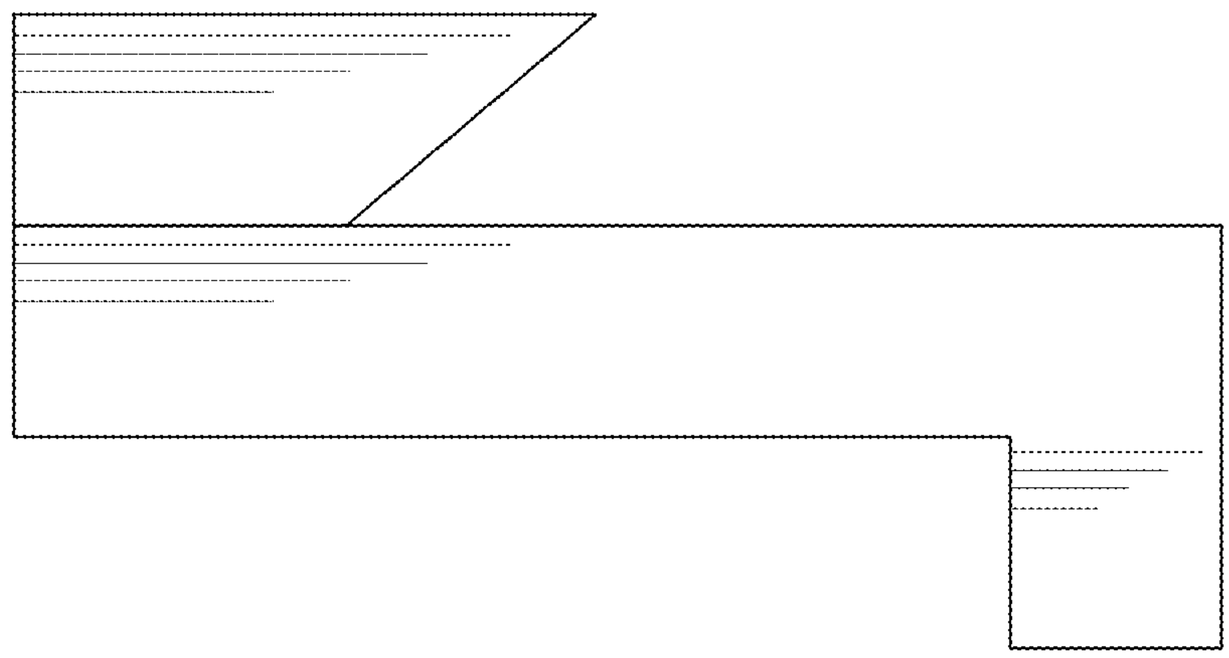

FIG. 4

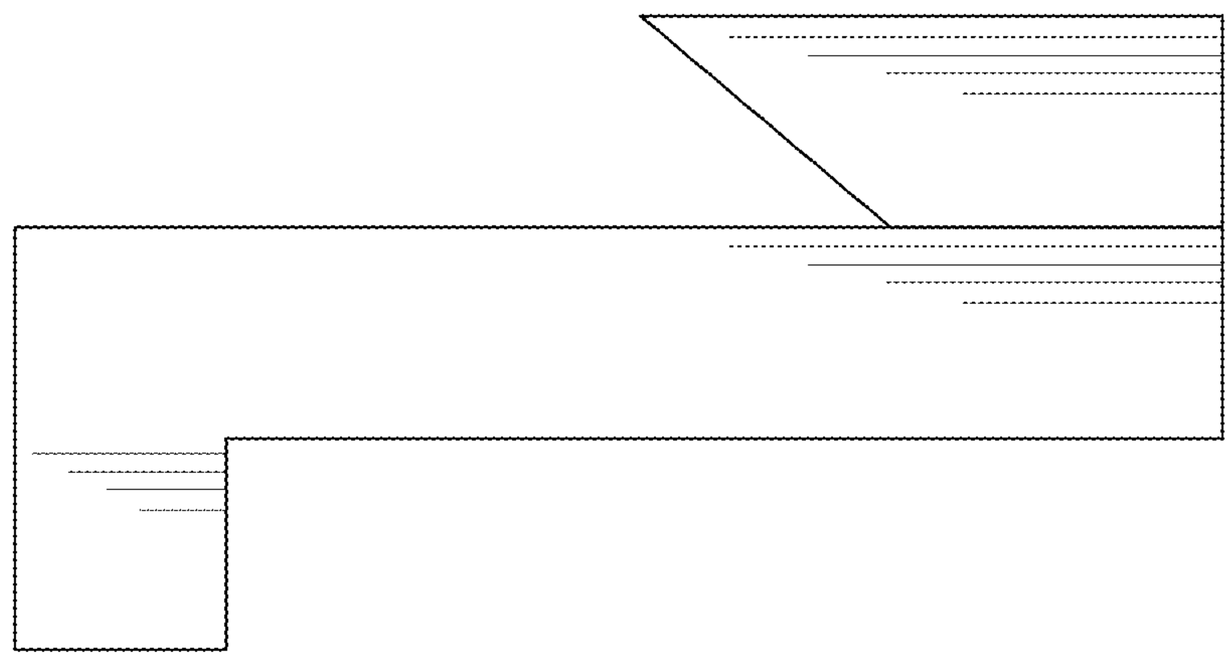

FIG. 5

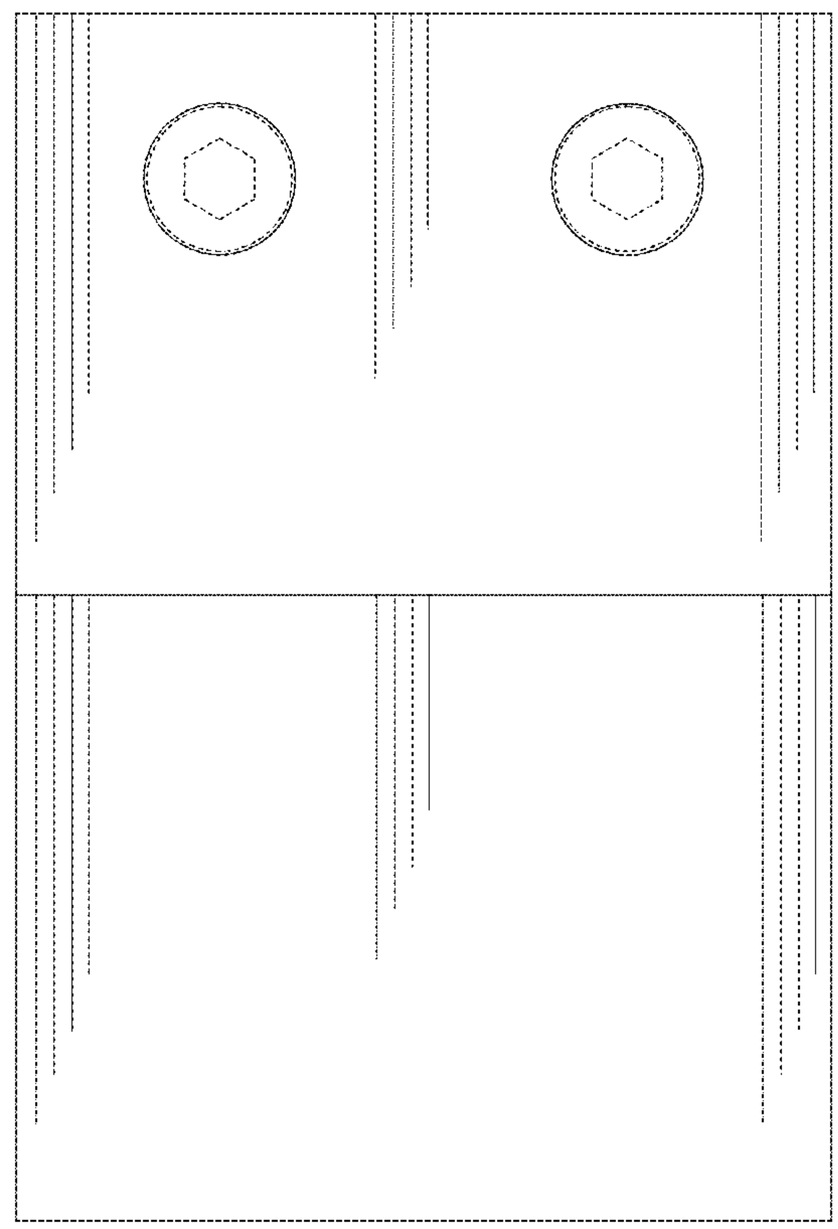

FIG. 6

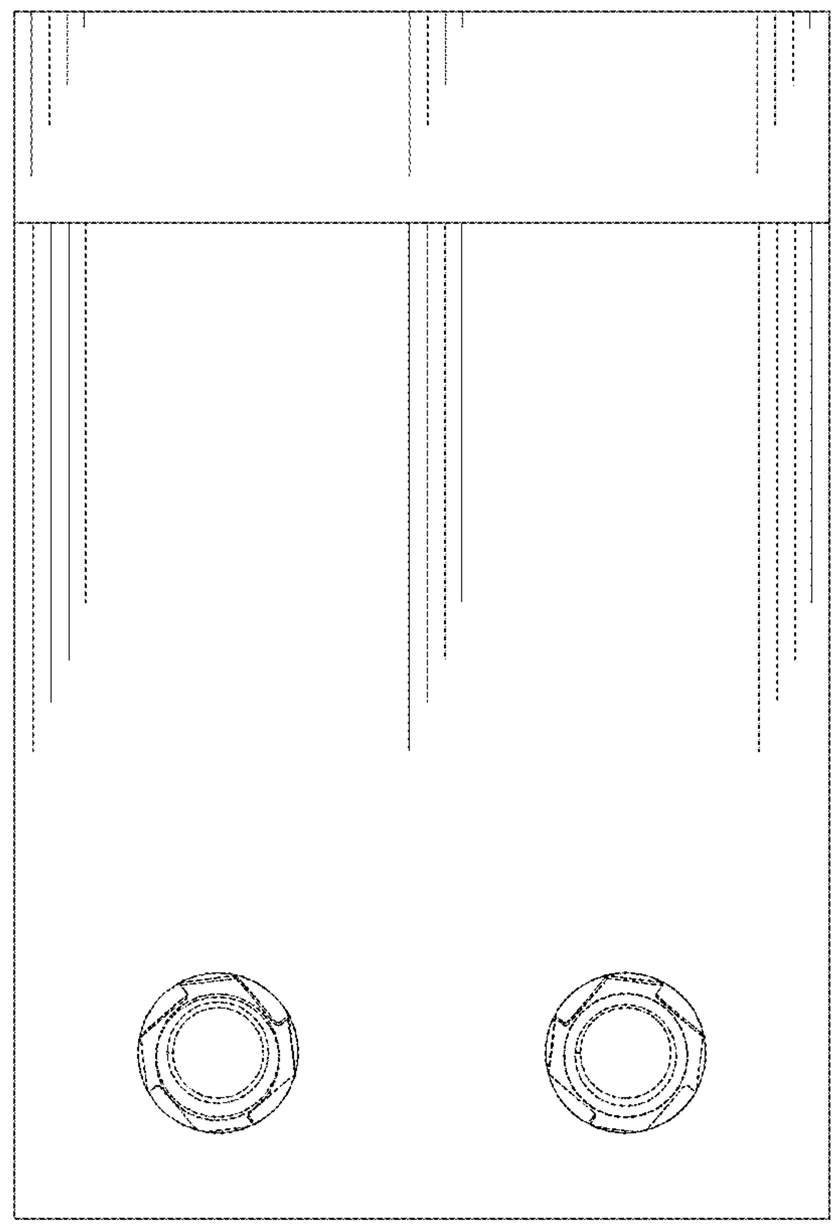

FIG. 7