US00D760676S

(12) United States Design Patent

Chalabi et al.

(10) Patent No.: US D760,676 S
(45) Date of Patent: ** Jul. 5, 2016

(54) **VIDEO TELECONFERENCING DEVICE**

(71) Applicant: **Microsoft Corporation**, Redmond, WA (US)

(72) Inventors: **Malek Chalabi**, Seattle, WA (US); **Gadi Amit**, San Mateo, CA (US); **Matt Pugmire**, San Francisco, CA (US); **Chadwick Harber**, San Francisco, CA (US); **Quinn Fitzgerald**, San Francisco, CA (US)

(73) Assignee: **Microsoft Corporation**, Redmond, WA (US)

(**) Term: **15 Years**

(21) Appl. No.: **29/528,286**

(22) Filed: **May 27, 2015**

(51) **LOC (10) Cl.** **14-03**
(52) **U.S. Cl.**
USPC **D14/125**
(58) **Field of Classification Search**
USPC D14/125, 357, 358, 496, 188, 242, 432; D13/184; 348/14.01, 14.05, 14.1, 348/14.16, 211.12, 385.1, 516, 739, 211.11, 348/211.13; 340/825.03; 455/6.1, 6.2, 455/575.1, 416–418; 312/223.1, 7.2; 379/88.13, 93.21, 158, 202.01, 205.01, 379/433.02, 433.03; 709/204–206
CPC H04N 21/00; H04N 21/20; H04N 21/40; H04N 7/14; H04N 7/15; H04L 12/1813; H04L 65/403; H04M 1/00; H04M 1/02; H04M 3/56; H04M 9/00; H04M 11/00; H04R 3/02; H04R 27/00
See application file for complete search history.

(56) **References Cited**

U.S. PATENT DOCUMENTS

5,382,972	A	*	1/1995	Kannes	H04N 5/445 348/14.01
5,485,504	A	*	1/1996	Ohnsorge	H04M 1/0264 348/14.02
5,737,011	A	*	4/1998	Lukacs	H04N 7/15 348/14.09
5,745,161	A	*	4/1998	Ito	H04N 7/15 348/14.09
D423,491	S	*	4/2000	Harris	D14/130
D540,753	S	*	4/2007	Lukic	D14/125
D605,145	S	*	12/2009	Kellar	D14/125
D608,372	S	*	1/2010	Brace	D15/5
8,379,075	B2	*	2/2013	Hagen	H04N 7/15 348/14.08
D737,788	S	*	9/2015	Leung	D14/125
D737,789	S	*	9/2015	Leung	D14/125
9,204,094	B2	*	12/2015	Mock	H04N 7/15

OTHER PUBLICATIONS

U.S. Appl. No. 29/528,280, Video Teleconferencing Device, filed May 27, 2015.
U.S. Appl. No. 29/528,281, Video Teleconferencing Device, filed May 27, 2015.

(Continued)

Primary Examiner — Randall Gholson
(74) *Attorney, Agent, or Firm* — Banner & Witcoff, Ltd.

(57) **CLAIM**

The ornamental design for a video teleconferencing device, as shown and described.

DESCRIPTION

FIG. **1** is a front perspective view of a video teleconferencing device showing our new design;
FIG. **2** is a front view thereof;
FIG. **3** is a rear view thereof;
FIG. **4** is a right side view thereof;
FIG. **5** is a left side view thereof;
FIG. **6** is a top view thereof; and,
FIG. **7** is a bottom view thereof.
The broken line showing of the remainder of the video teleconferencing device is for environmental purposes only and forms no part of the claimed design.

1 Claim, 6 Drawing Sheets

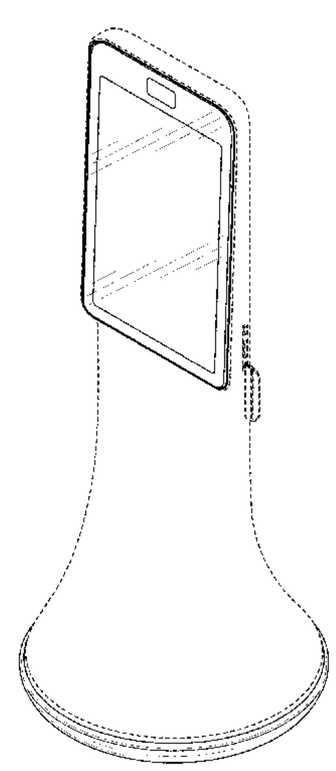

(56) **References Cited**

OTHER PUBLICATIONS

U.S. Appl. No. 29/528,282, Video Teleconferencing Device, filed May 27, 2015.
U.S. Appl. No. 29/528,283, Video Teleconferencing Device, filed May 27, 2015.
U.S. Appl. No. 29/528,285, Video Teleconferencing Device, filed May 27, 2015.
Deyle, Travis. "MeBot: An Affective Teleconferencing Robot from MIT Being Presented at HRI 2010." Hizook., Feb. 28, 2010 [online], [retrieved on May 22, 2015]. Retrieved from the Internet <URL: http://www.hizook.com/blog/2010/02/28/mebot-affective-teleconferencing-robot-mit-being-presented-hri-2010>.
Price, Andrew. "Boston's Children's Hospital is Sending Some Patients Home with Sleek New Robots." Fast Company Online Magazine., Feb. 2, 2012 [online], [retrieved on May 21, 2015]. Retrieved from the Internet <URL: http://www.fastcoexist.com/1679235/boston-children-s-hospital-is-sending-some-patients-home-with-sleek-new-robots>.
"Special Guest Robot at 'Brainworks' to Show Middle Schoolers How Doctors Can Monitor Patients From a Distance." Cedars-Sinai., Mar. 7, 2013 [online], [retrieved on May 21, 2015]. Retrieved from the Internet <URL: http://www. cedars-sinai.edu/About-Us/News/News-Releases-2013/Special-guest-robot-at-Brainworks-to-show-middle-schooler-show-doctors-can-monitor-patients-from-a-distance.aspx>.
"Double Teleconferencing Robot is Now Available for Purchase From the Online Apple Store." iClarified., Nov. 12, 2013 [online]. [retrieved on May 21, 2015]. Retrieved from Internet <URL: http://www.iclarified.com/35710/double-teleconferencing-robot-is-now-available-for-purchase-from-the-online-apple-store>.
"iRobot RP-VITA the Newest in Telepresence Medical Robots." Design Junky Laorosa., Nov. 19, 2012 [online], [retrieved on May 21, 2015]. Retrieved from the Internet <URL: http://www.design-laorosa.com/2012/11/irobot-rp-vita-newest-in-telepresence.html>.
Berkowitz, Roger. "The Robot is Boss." Hannah Arendt Center Bard College., Sep. 5, 2010 [online], [retrieved on May 22, 2015]. Retrieved from the Internet <URL: http://www.hannaharendtcenter.org/?p=346>.
Scene from Demolition Man. Warner Bros., [release date Oct. 8, 1993], [retrieved on May 22, 2015].

* cited by examiner

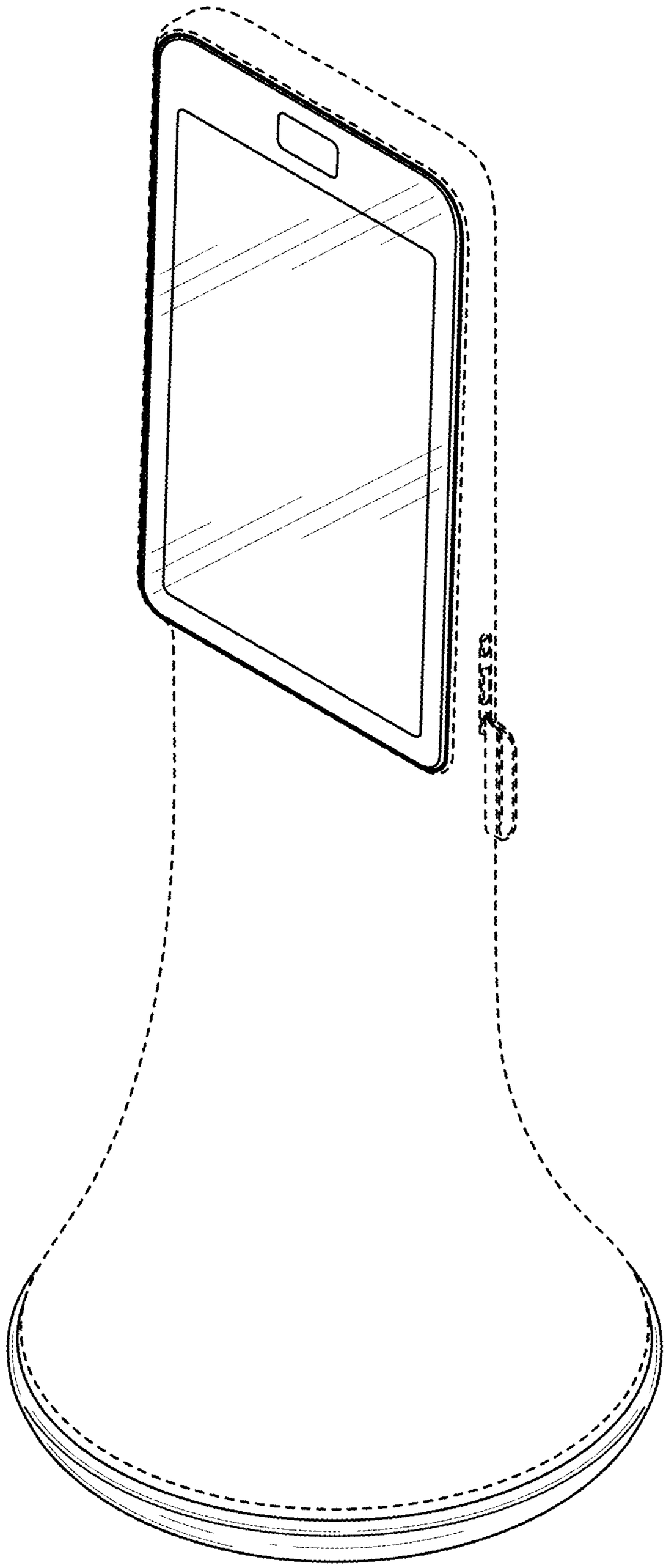

FIG. 1

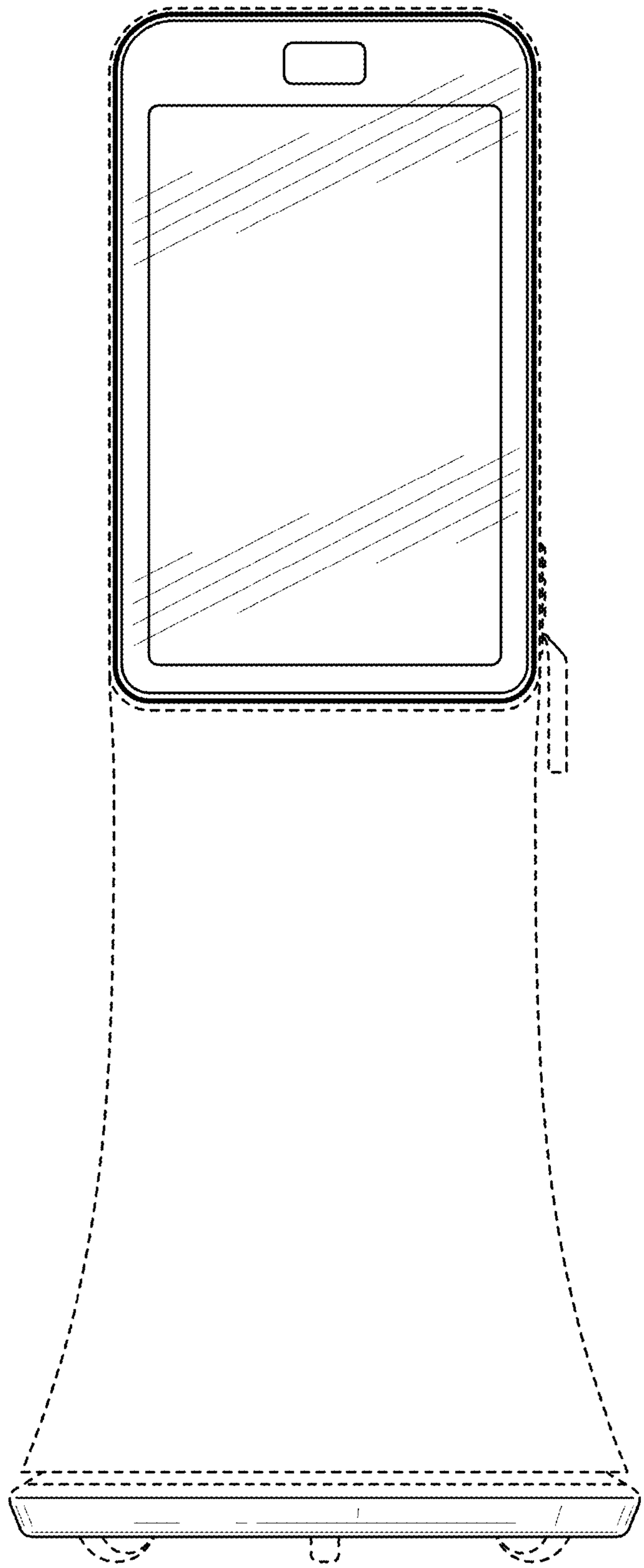

FIG. 2

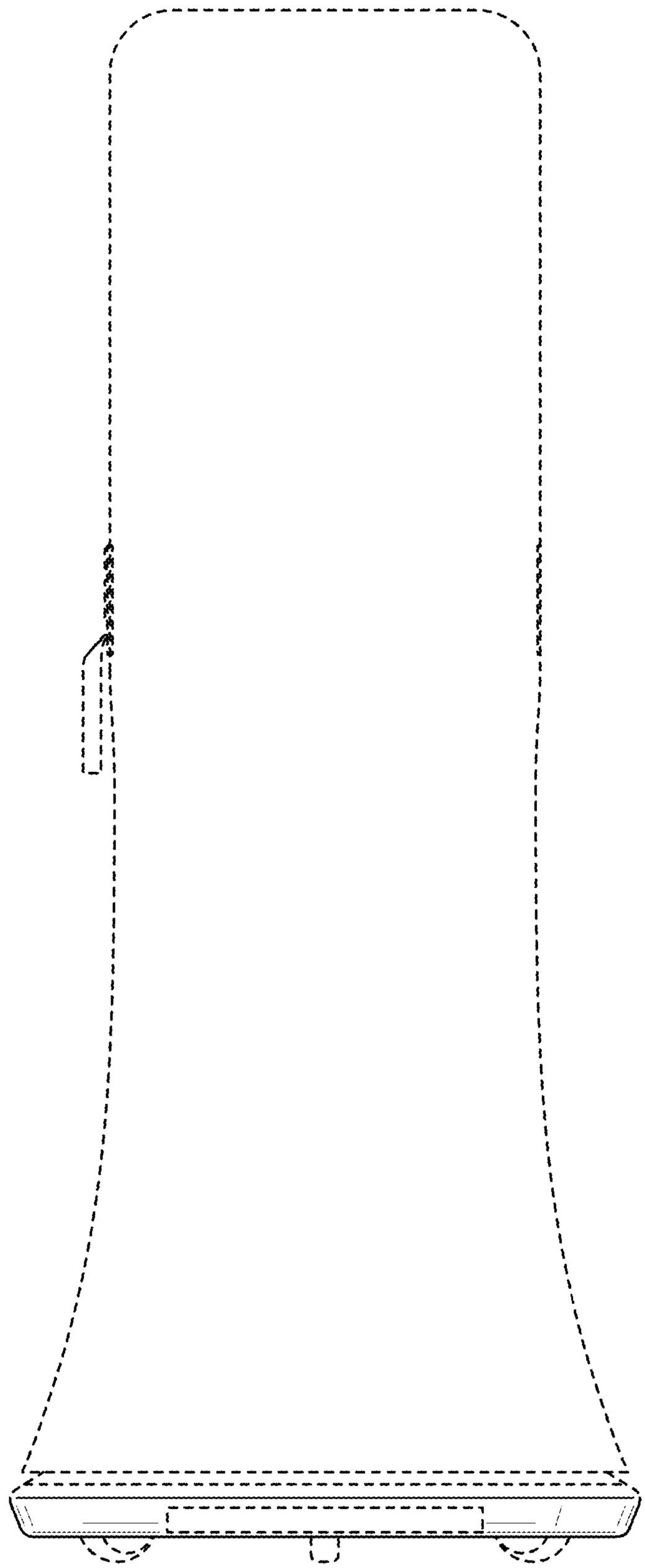

FIG. 3

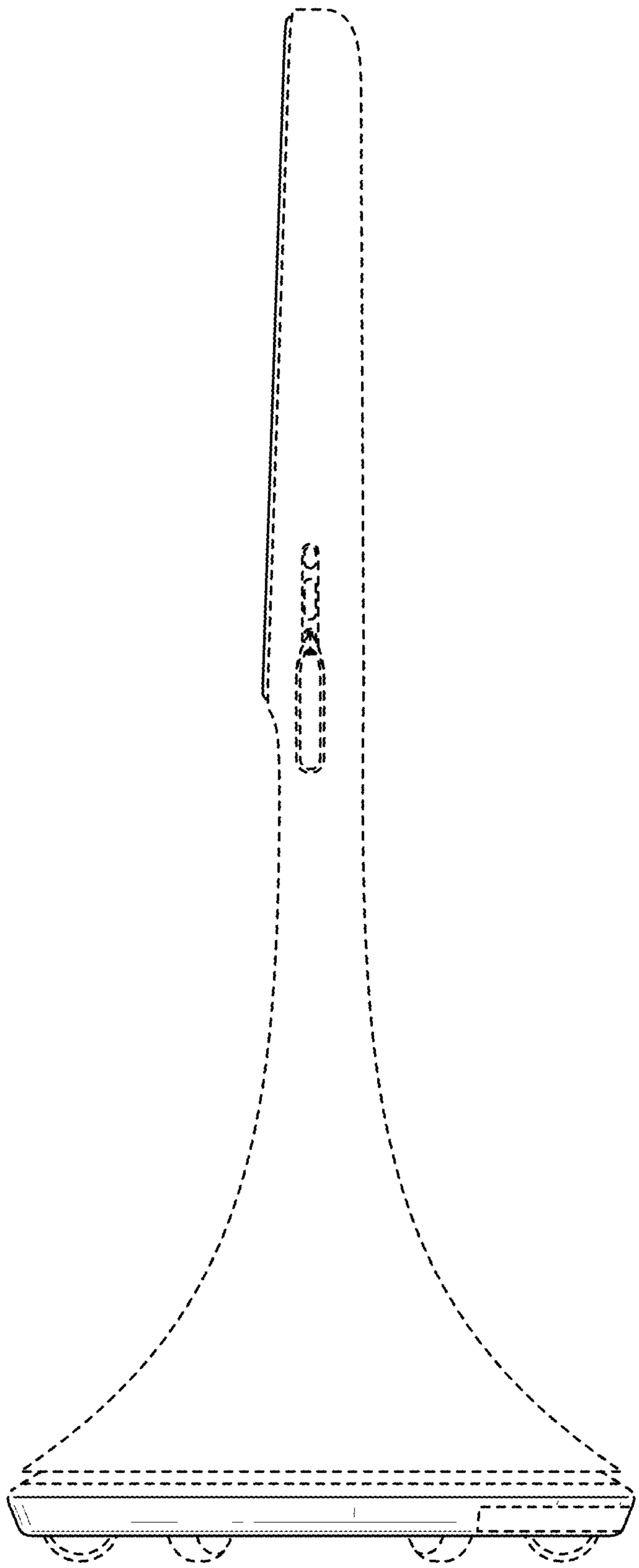

FIG. 4

FIG. 5

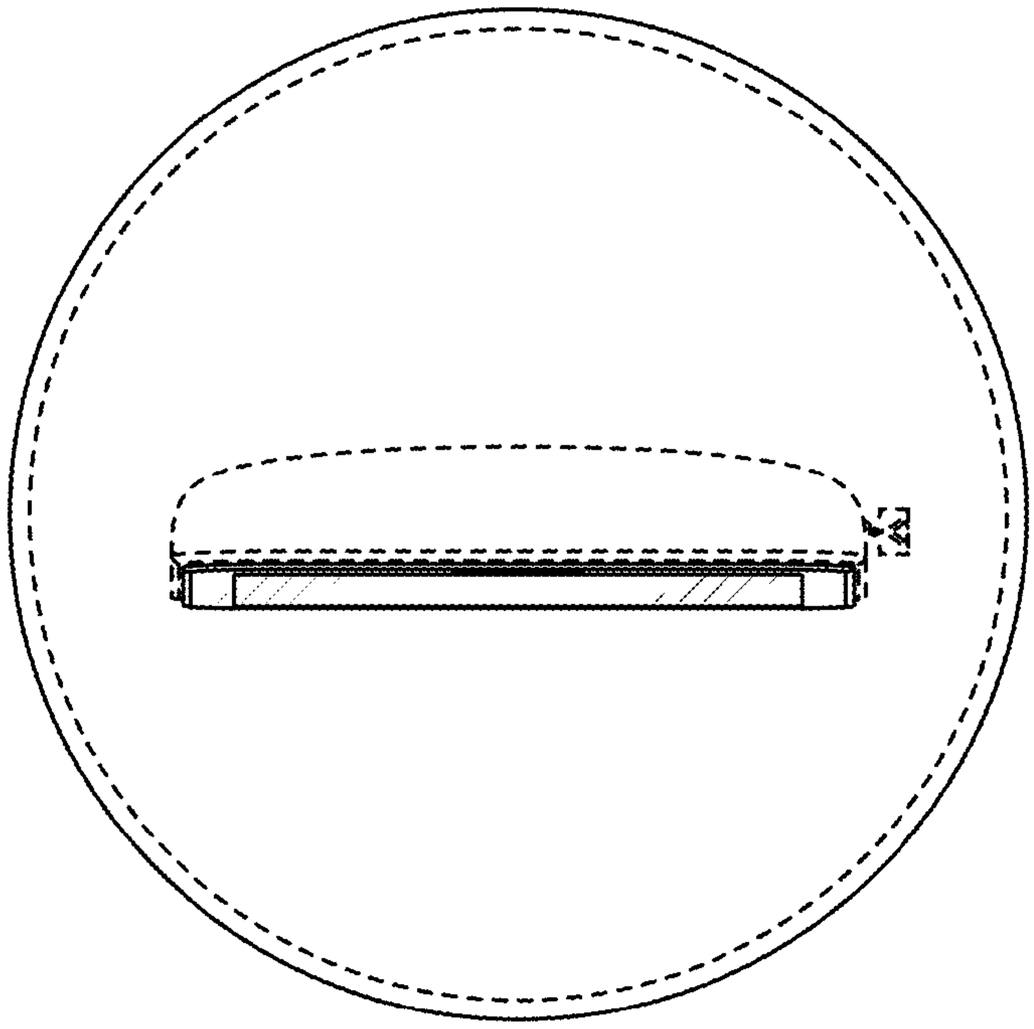

FIG. 6

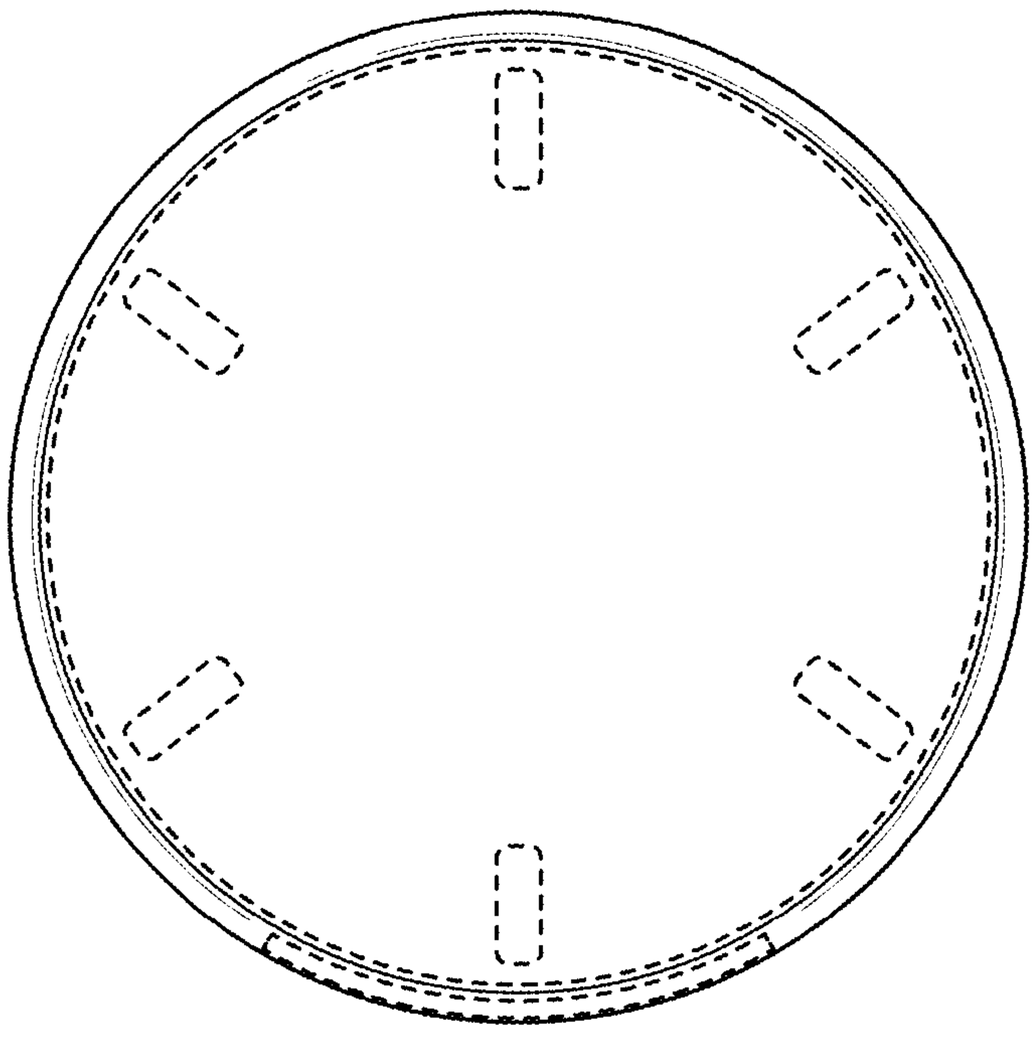

FIG. 7