US00D760602S

(12) United States Design Patent
Sharpe

(10) **Patent No.: US D760,602 S**
(45) **Date of Patent: ** *Jul. 5, 2016**

(54) **HEART-SHAPED TIMEPIECE**

(71) Applicant: **Ronald W. Sharpe**, San Ysidro, CA (US)

(72) Inventor: **Ronald W. Sharpe**, San Ysidro, CA (US)

(*) Notice: This patent is subject to a terminal disclaimer.

(**) Term: **14 Years**

(21) Appl. No.: **29/486,727**

(22) Filed: **Apr. 2, 2014**

Related U.S. Application Data

(63) Continuation-in-part of application No. 14/207,747, filed on Mar. 13, 2014.

(51) **LOC (10) Cl.** **10-01**

(52) **U.S. Cl.**
USPC **D10/6**; D10/15

(58) **Field of Classification Search**
USPC D10/1–29, 30–39, 122–132; D3/208; D11/133, 157; D19/64; 368/10, 76–79, 368/82, 85, 223–226, 239, 240, 241, 368/276–282, 285, 309; 434/304
CPC G04C 21/00; G04C 21/14; G04C 21/16; G04B 19/00; G04B 19/04; G04B 45/0069; G04B 45/0076; G04B 47/00; G04B 47/04; G04G 13/00; G04G 13/026
See application file for complete search history.

(56) **References Cited**

U.S. PATENT DOCUMENTS

D62,839	S	*	8/1923	McDaniel	D10/2
D91,101	S	*	11/1933	Covone	D10/6
D107,943	S	*	1/1938	Bloom	D10/33
D110,166	S	*	6/1938	Arzt	D10/33
D211,897	S	*	8/1968	Tokar	D10/31
D319,193	S	*	8/1991	Kwun	D10/33
5,199,009	A	*	3/1993	Svast	368/240
D356,738	S	*	3/1995	Williams	D10/6
D360,366	S	*	7/1995	McGill	D10/6
D375,687	S	*	11/1996	Carman	D10/6
D383,395	S	*	9/1997	Giesbrecht	D10/6
D386,426	S	*	11/1997	Gemmell	D10/31
D412,668	S	*	8/1999	Swash et al.	D10/6
D505,339	S	*	5/2005	Lui	D10/6
D614,509	S	*	4/2010	Evans, Jr.	D10/6
D619,353	S	*	7/2010	Ash	D3/208
8,260,405	B2		9/2012	Aarts	
2008/0051667	A1		2/2008	Goldreich	
2008/0234600	A1		9/2008	Marsh	
2008/0262364	A1	*	10/2008	Aarts	600/509
2010/0311544	A1		12/2010	Robinette et al.	
2012/0277014	A1		11/2012	Caldwell	

* cited by examiner

Primary Examiner — Martie K Holtje
(74) *Attorney, Agent, or Firm* — Daniel Boudwin; Global Intellectual Property Agency LLC

(57) **CLAIM**

The ornamental design for a heart-shaped timepiece, as shown and described.

DESCRIPTION

FIG. **1** is a left front perspective view of a heart-shaped timepiece showing my new design;
FIG. **2** is a front elevational view thereof;
FIG. **3** is a rear elevational view thereof;
FIG. **4** is a first side elevational view thereof;
FIG. **5** is a second side elevational view thereof;
FIG. **6** is a bottom plan view thereof; and,
FIG. **7** is a top plan view thereof.

1 Claim, 5 Drawing Sheets

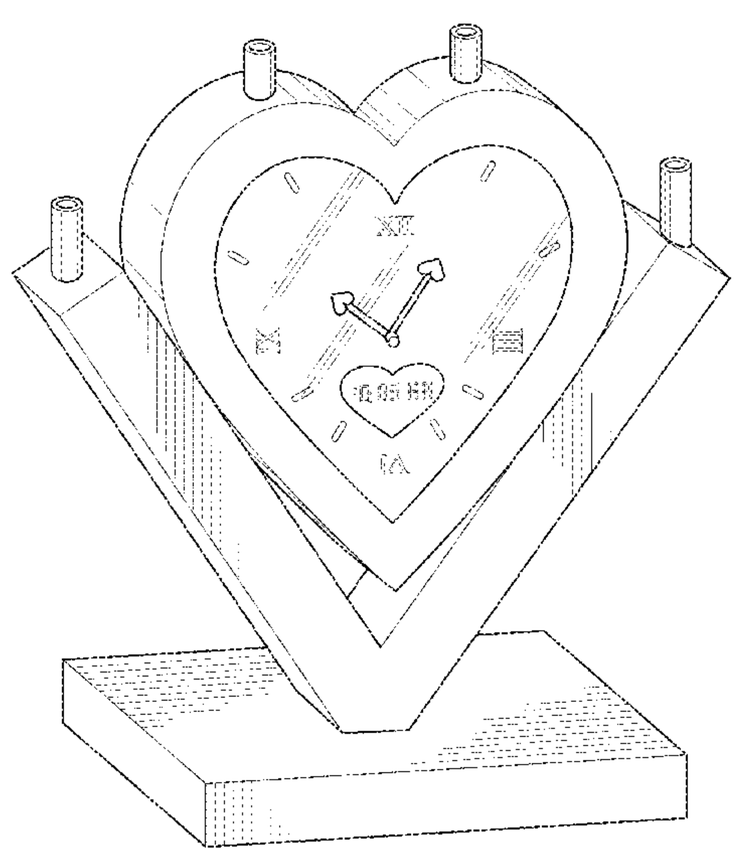

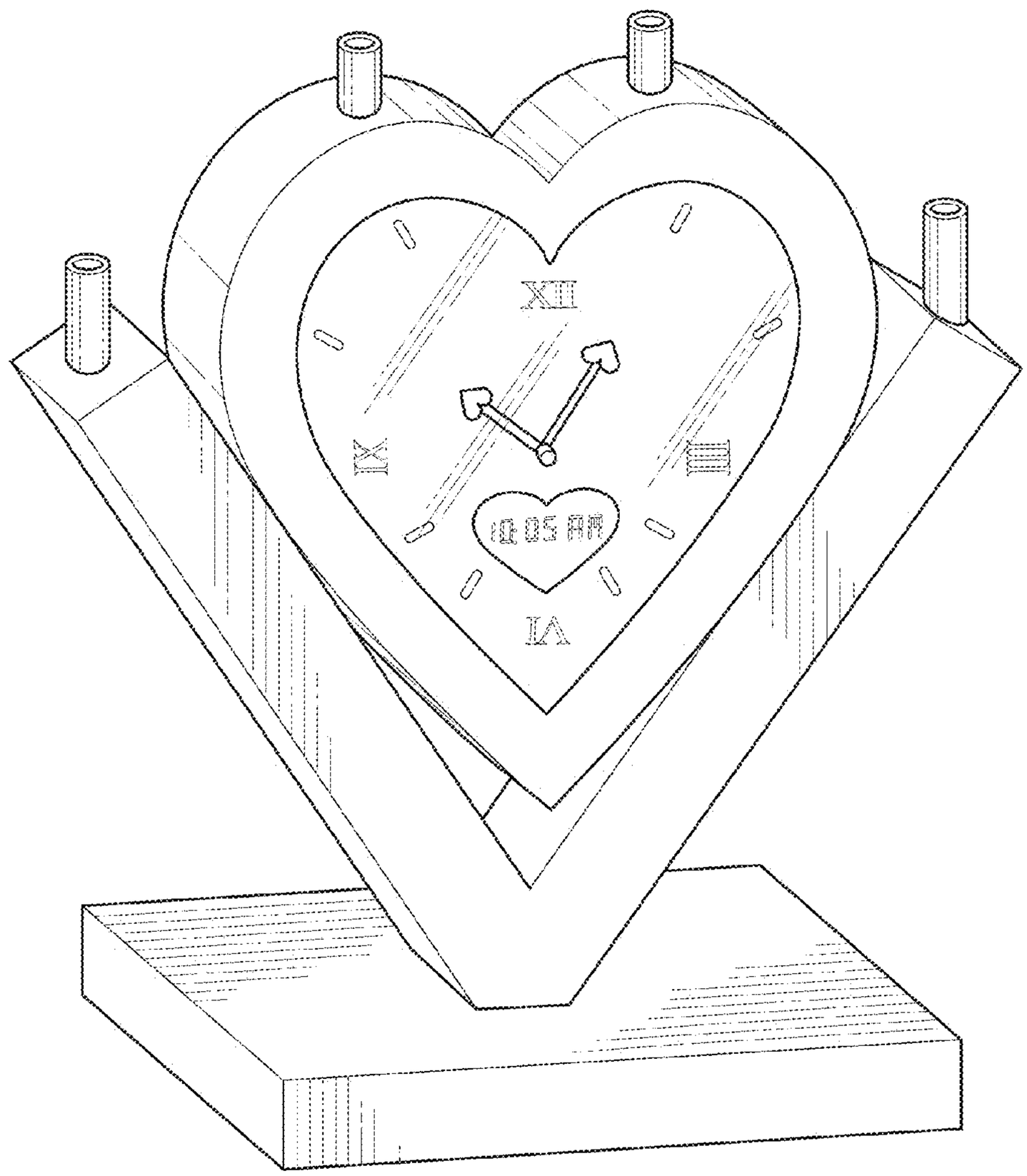

FIG. 1

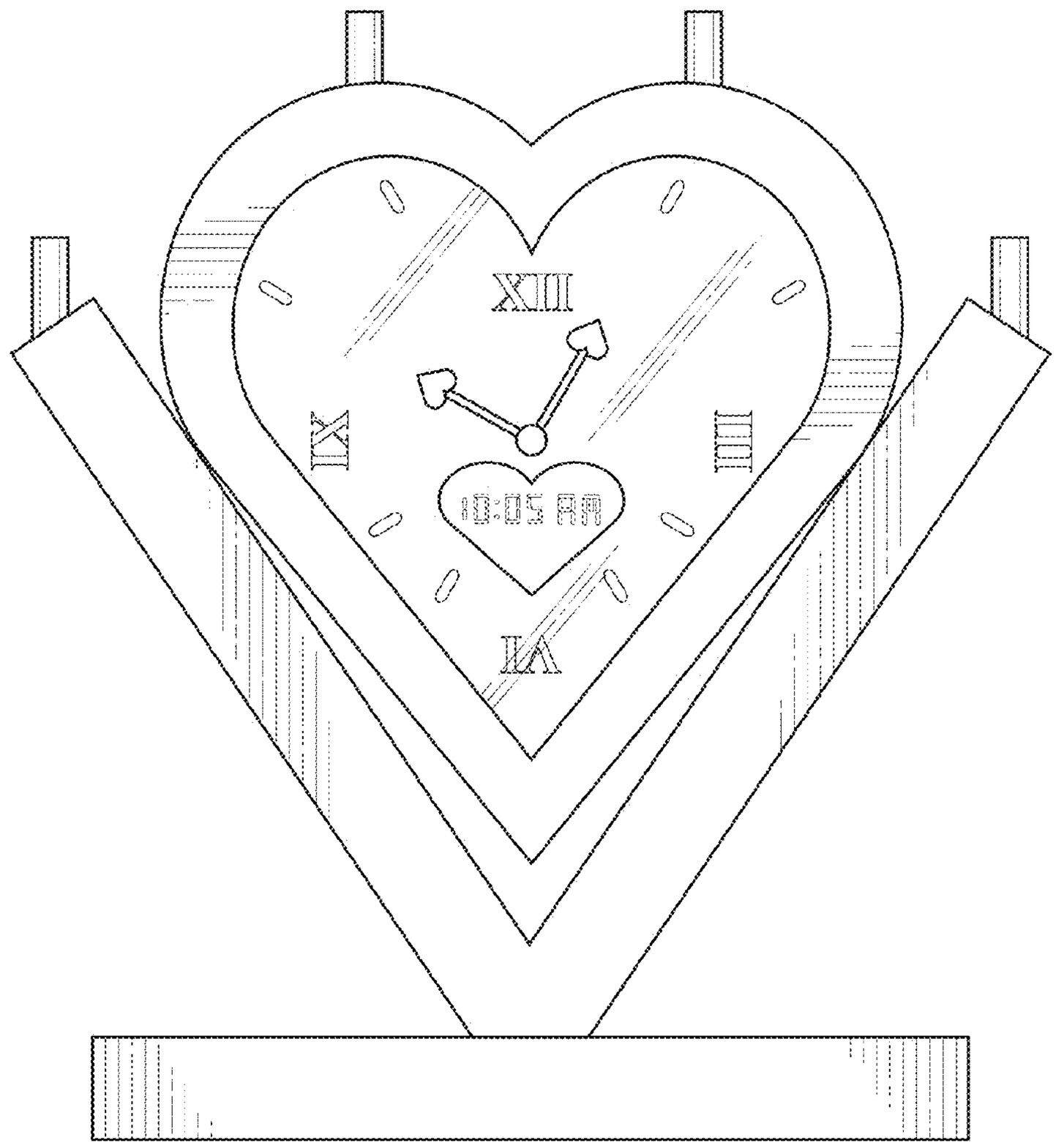

FIG. 2

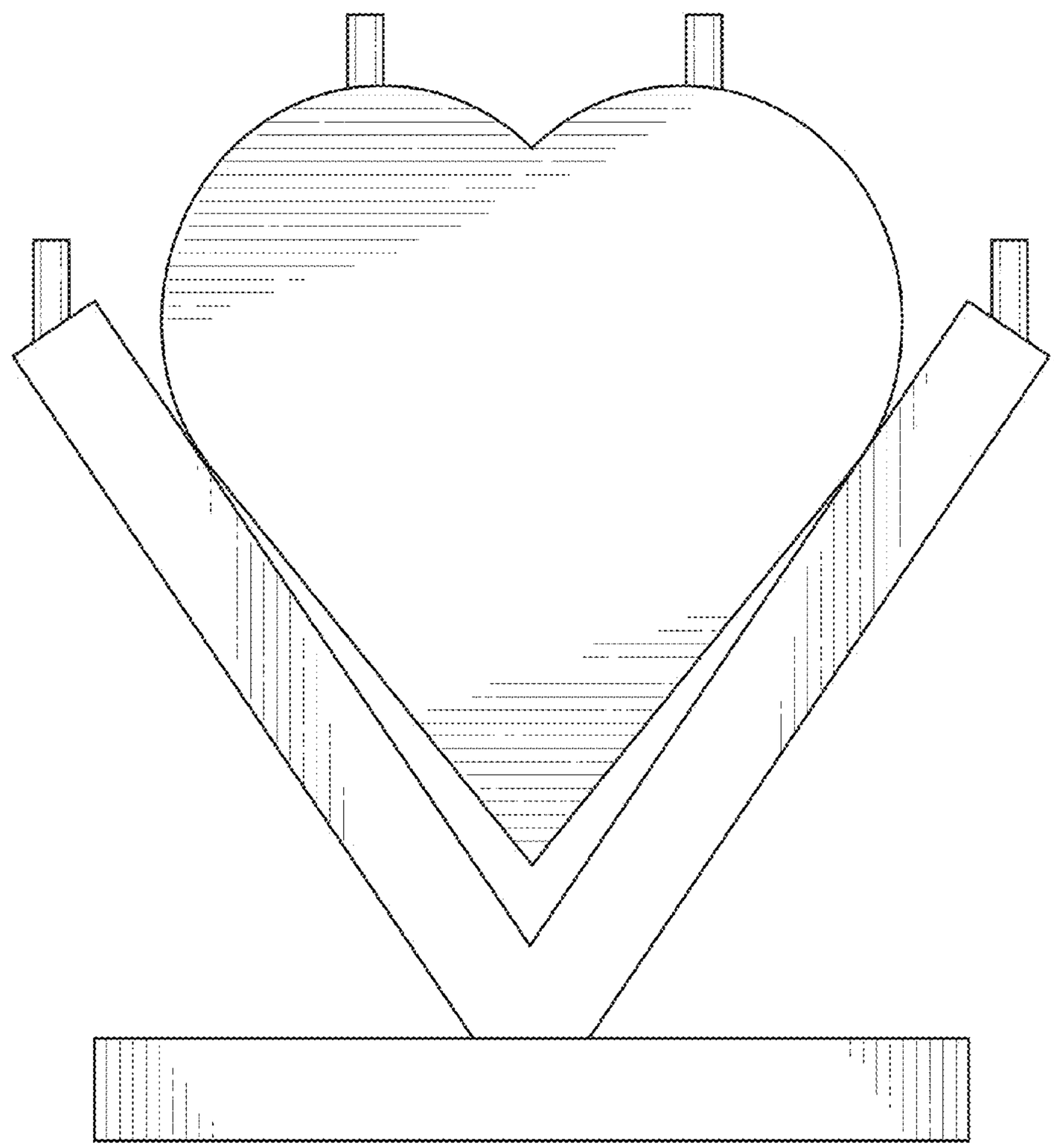

FIG. 3

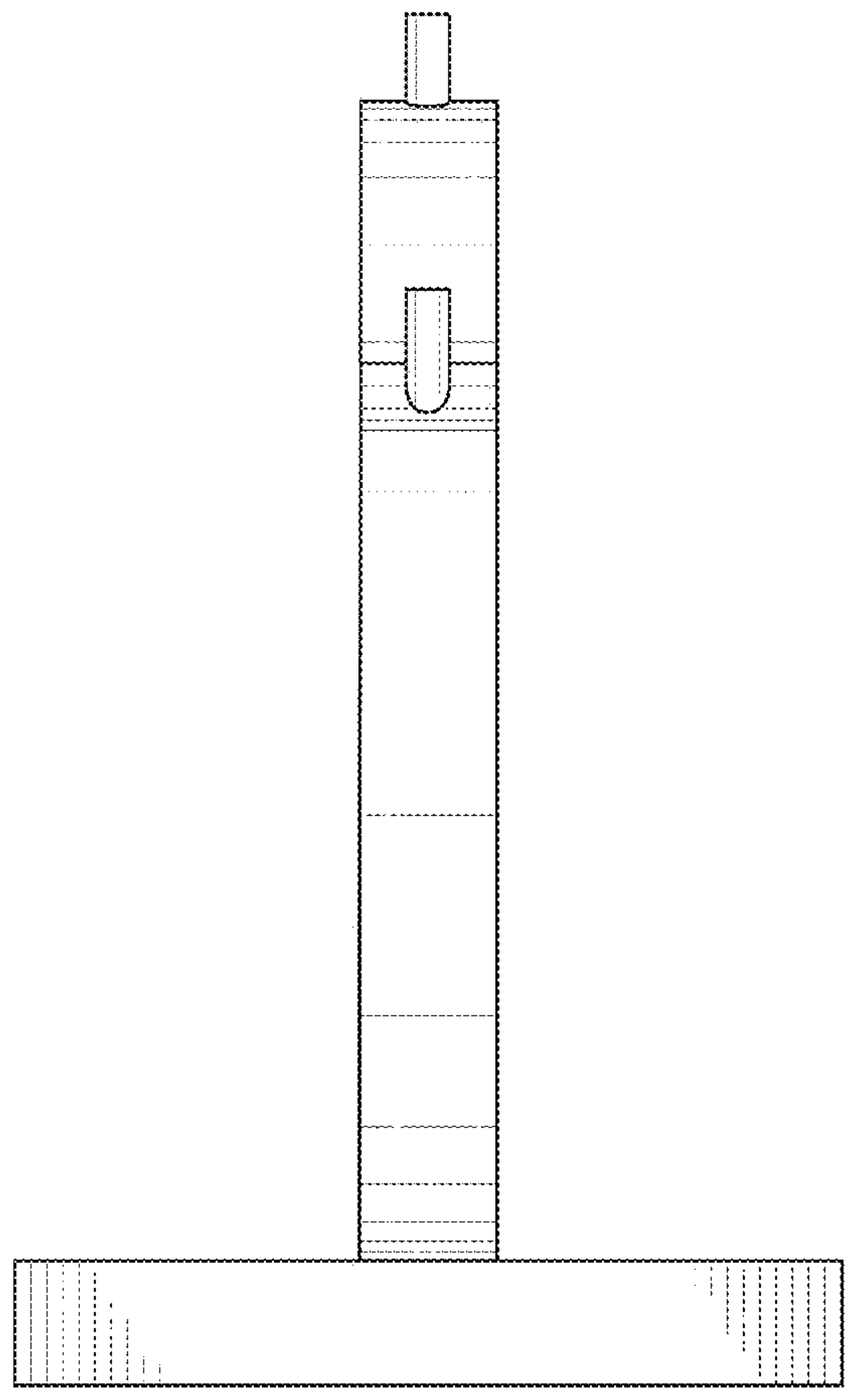

FIG. 4

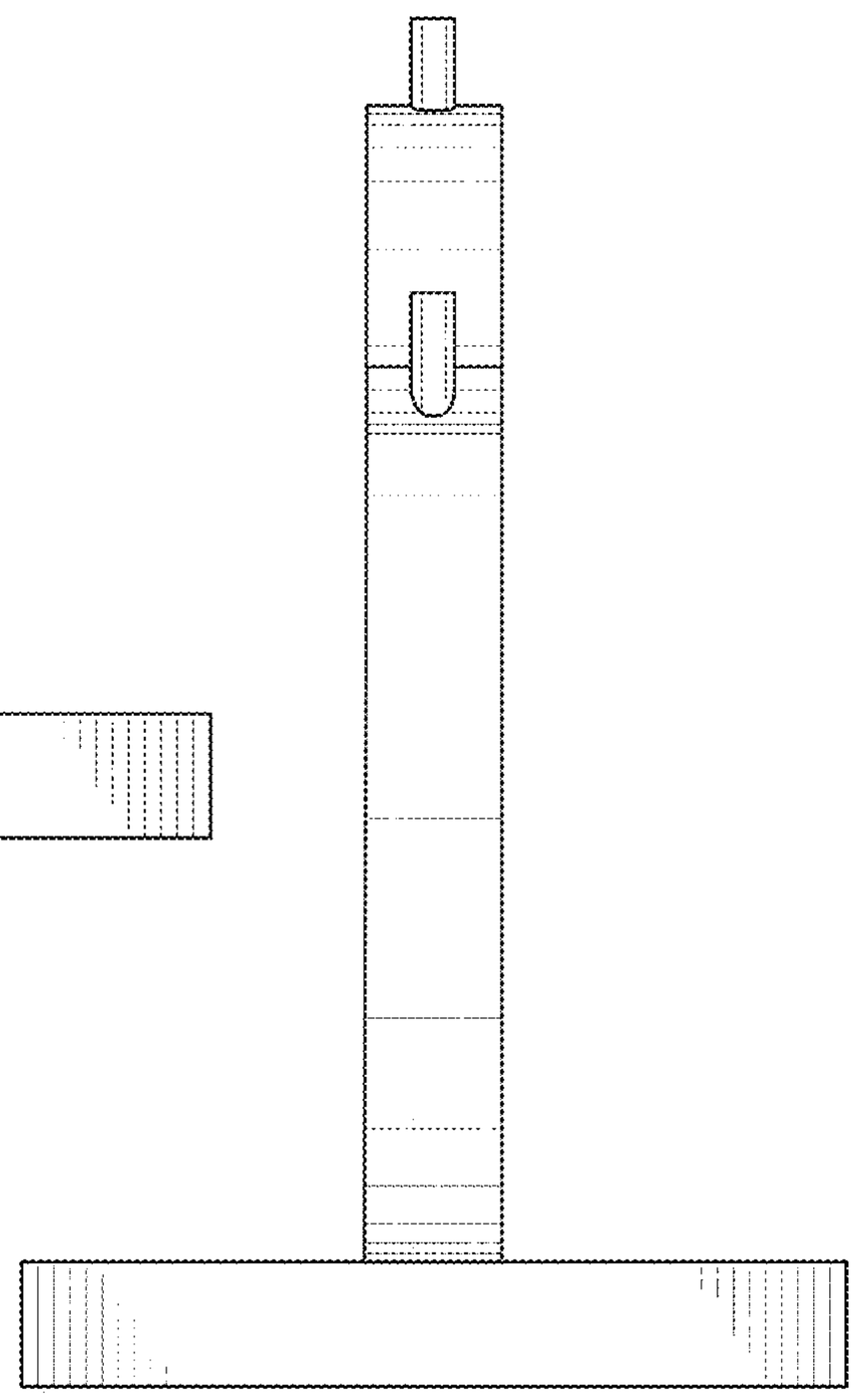

FIG. 5

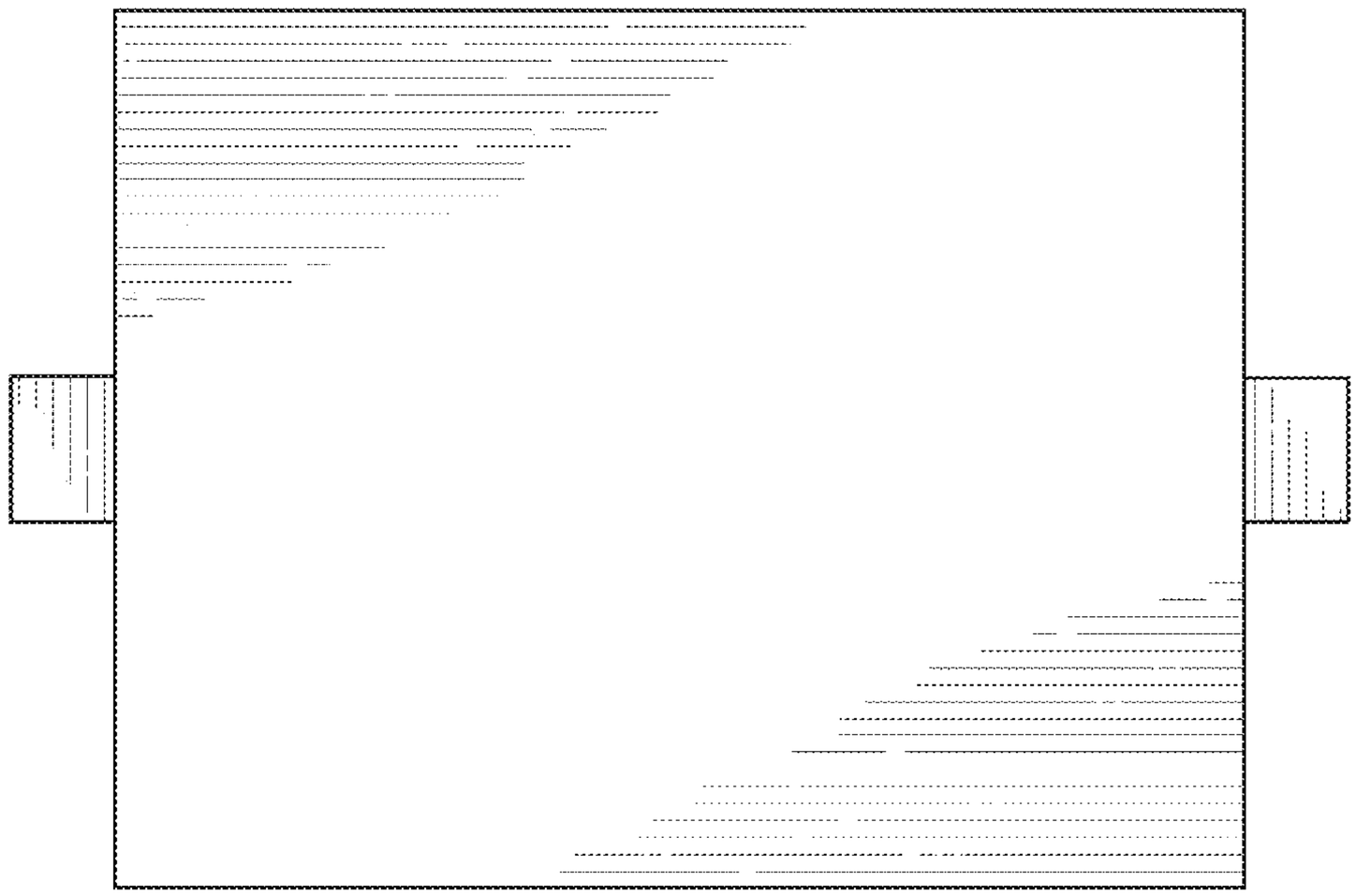

FIG. 6

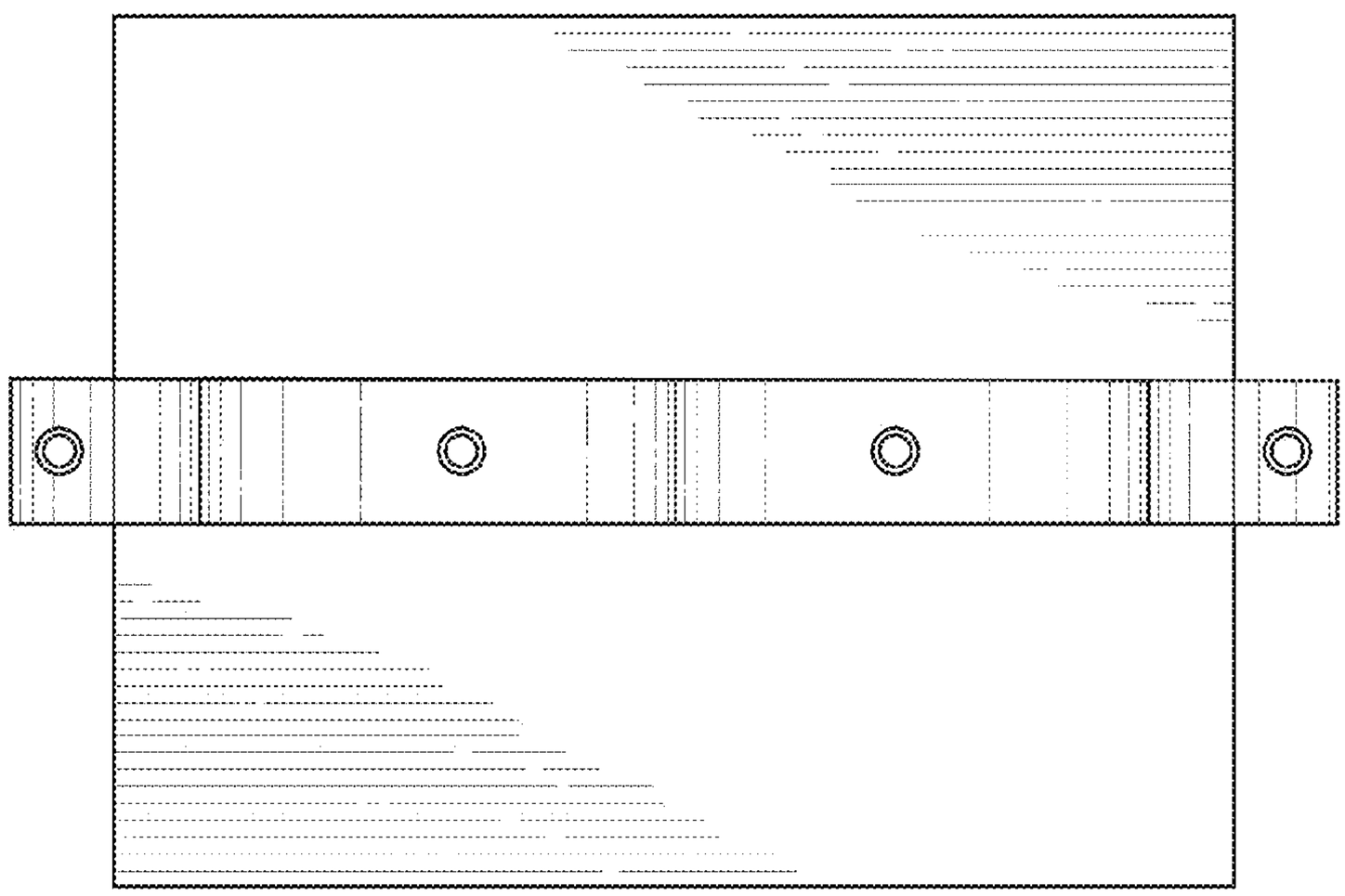

FIG. 7