US00D759876S

(12) United States Design Patent

Blum et al.

(10) Patent No.: US D759,876 S
(45) Date of Patent: ** Jun. 21, 2016

(54) **LUMINAIRE**

(71) Applicant: **ABL IP Holding, LLC**, Conyers, GA (US)

(72) Inventors: **Darren Blum**, San Mateo, CA (US); **Michael Trung Tran**, Oakland, CA (US); **Peter Y. Y. Ngai**, Alamo, CA (US); **Jeannine Fisher Wang**, Oakland, CA (US)

(73) Assignee: **ABL IP Holding, LLC**, Conyers, GA (US)

(**) Term: **14 Years**

(21) Appl. No.: **29/525,769**

(22) Filed: **May 1, 2015**

(51) **LOC (10) Cl.** **26-03**

(52) **U.S. Cl.**
USPC **D26/88**; D26/90

(58) **Field of Classification Search**
USPC D26/63, 65, 76, 80–91, 118
CPC F21S 8/06; F21S 8/061; F21S 8/063; F21S 8/065; F21S 8/068; F21V 3/0418; F21V 3/0427; F21V 3/0436; F21V 3/0445; F21V 21/008; F21V 21/104
See application file for complete search history.

(56) **References Cited**

U.S. PATENT DOCUMENTS

D127,397	S	*	5/1941	Johnston	362/223
D234,621	S	*	3/1975	Muller	D26/80
D454,971	S	*	3/2002	Crosby	D26/85
D575,892	S	*	8/2008	Chandler	D26/76
D587,392	S	*	2/2009	Sabernig	D26/84
D595,446	S	*	6/2009	Pedersen	D26/84
D597,701	S		8/2009	Tran et al.	
D603,549	S	*	11/2009	Ng	D26/80
D642,319	S	*	7/2011	Sprengers	D26/85

(Continued)

Primary Examiner — Clare E Heflin
(74) *Attorney, Agent, or Firm* — Beeson Skinner Beverly, LLP

(57) **CLAIM**

The ornamental design for a luminaire, as shown and described.

DESCRIPTION

FIG. **1** is a bottom perspective view of a luminaire showing our new design;
FIG. **2** is a side elevational view thereof, the opposite side being a mirror image;
FIG. **3** is an end elevational view thereof, the opposite end being a mirror image;
FIG. **4** is a bottom plan view thereof;
FIG. **5** is a top plan view thereof; and
FIG. **6** is a cross-sectional view thereof taken along section lines **6-6** in FIG. **2**.
FIG. **7** is a bottom perspective view of a luminaire showing an alternative embodiment of our new design;
FIG. **8** is a side elevational view thereof, the opposite side being a mirror image;
FIG. **9** is an end elevational view thereof, the opposite end being a mirror image;
FIG. **10** is a bottom plan view thereof;
FIG. **11** is a top plan view thereof; and,
FIG. **12** is a cross-sectional view thereof taken along section lines **12-12** in FIG. **8**.
Certain of the broken lines shown in FIGS. **1-3** and **5-6** represent suspension cables, a ceiling canopy, and cable attachments; the broken line circles shown in FIGS. **1** and **4** represent auxiliary area light sources such as LEDs. The suspension cables, a ceiling canopy, cable attachments and auxiliary area light sources form no part of this embodiment of our claimed design.
Certain of the broken lines shown in FIGS. **7-9** and **11-12** represent suspension cables, a ceiling canopy, and cable attachments; the broken line rectangles shown in FIGS. **7** and **10** represent primary area light sources such as OLEDs; and the broken line circles shown in FIGS. **7** and **10** represent auxiliary area light sources such as LEDs. The suspension cables, a ceiling canopy, cable attachments, primary light sources and auxiliary area light sources form no part of this embodiment of our claimed design.

1 Claim, 4 Drawing Sheets

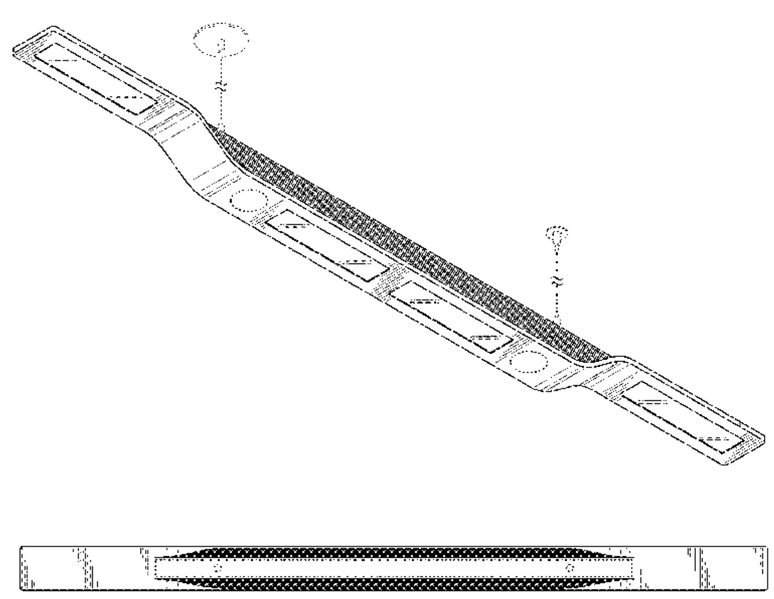

(56) **References Cited**

U.S. PATENT DOCUMENTS

D645,196	S	*	9/2011	Hickok	D26/120
D655,439	S	*	3/2012	Sabernig	D26/83
D655,441	S	*	3/2012	Sabernig	D26/88
D664,282	S	*	7/2012	Santoro	D26/76
8,430,530	B2	*	4/2013	Aurongzeb	F21V 14/02 362/249.03
D697,248	S		1/2014	Martin	
D700,989	S	*	3/2014	Rampolla	D26/88
D703,864	S		4/2014	Blum et al.	
D713,589	S		9/2014	Blum et al.	
D724,250	S	*	3/2015	Tran	D26/85
D730,560	S	*	5/2015	Tran	D26/85
D739,591	S	*	9/2015	Tran	D26/85
D742,575	S	*	11/2015	Blum	D26/85
D745,735	S	*	12/2015	Tran	D26/80
2010/0220497	A1		9/2010	Ngai	
2011/0157893	A1	*	6/2011	Ngai	F21S 2/00 362/249.02
2015/0060779	A1	*	3/2015	Kawahara	F21S 6/005 257/40

* cited by examiner

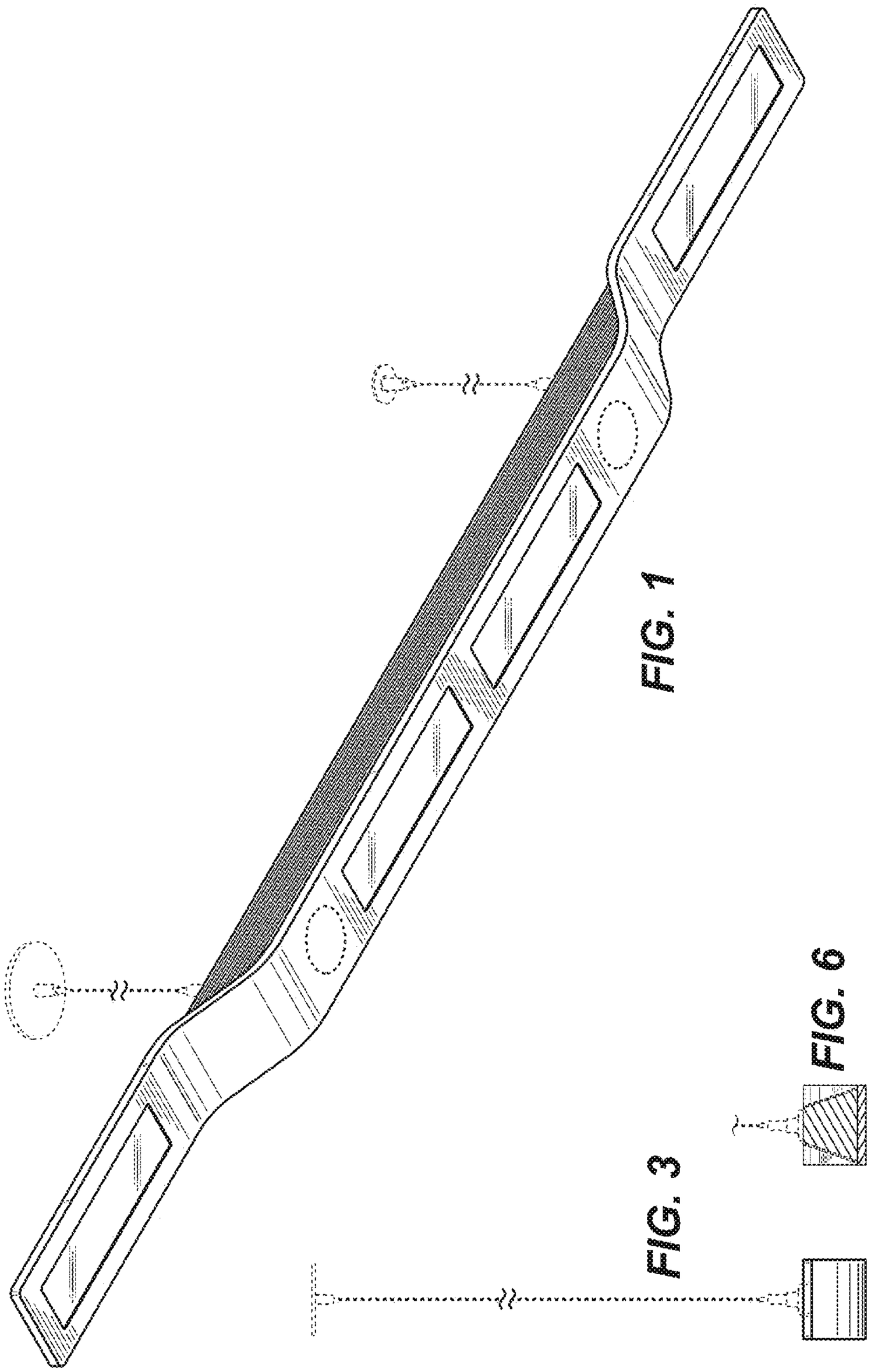
FIG. 1
FIG. 3
FIG. 6

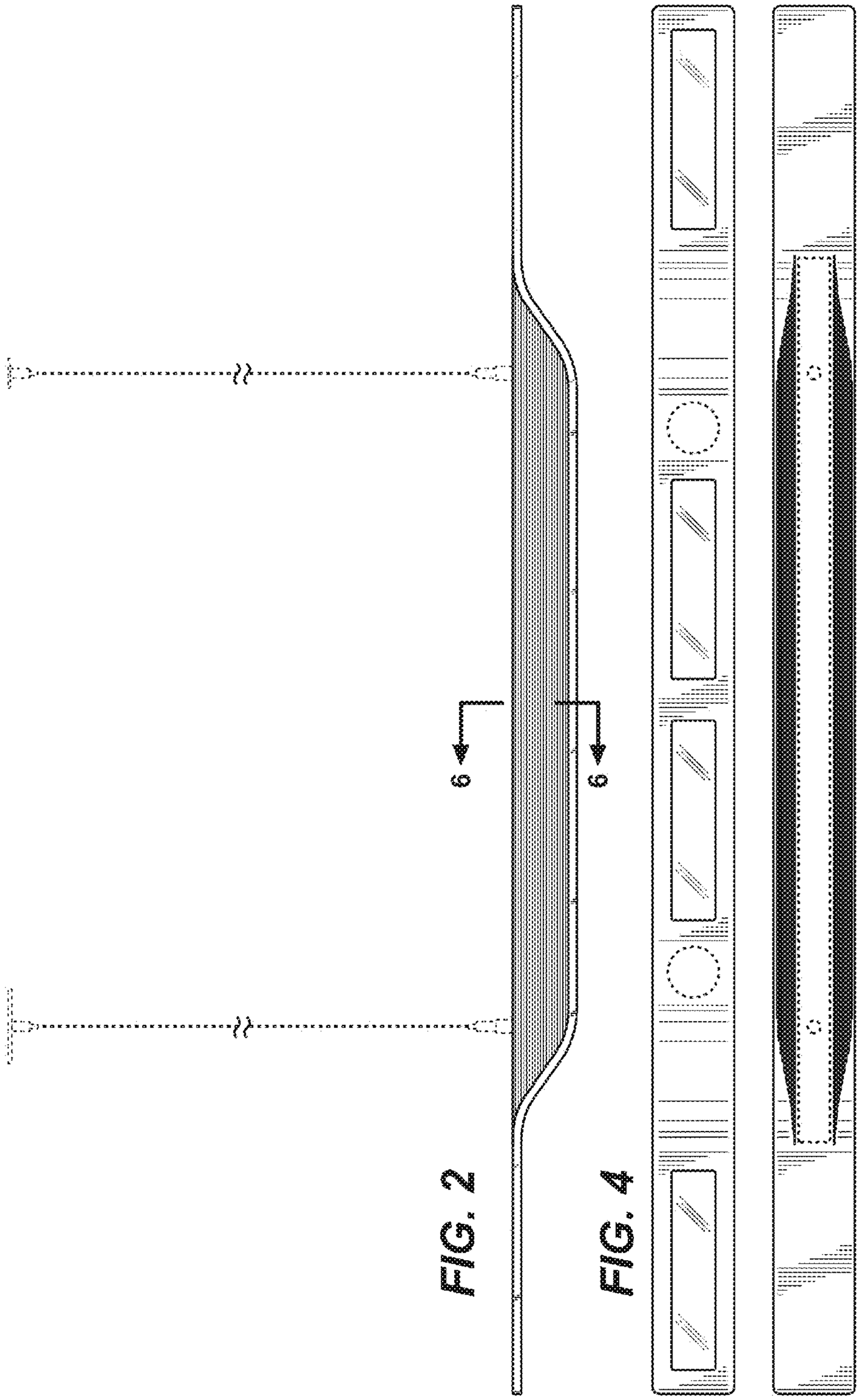

FIG. 2

FIG. 4

FIG. 5

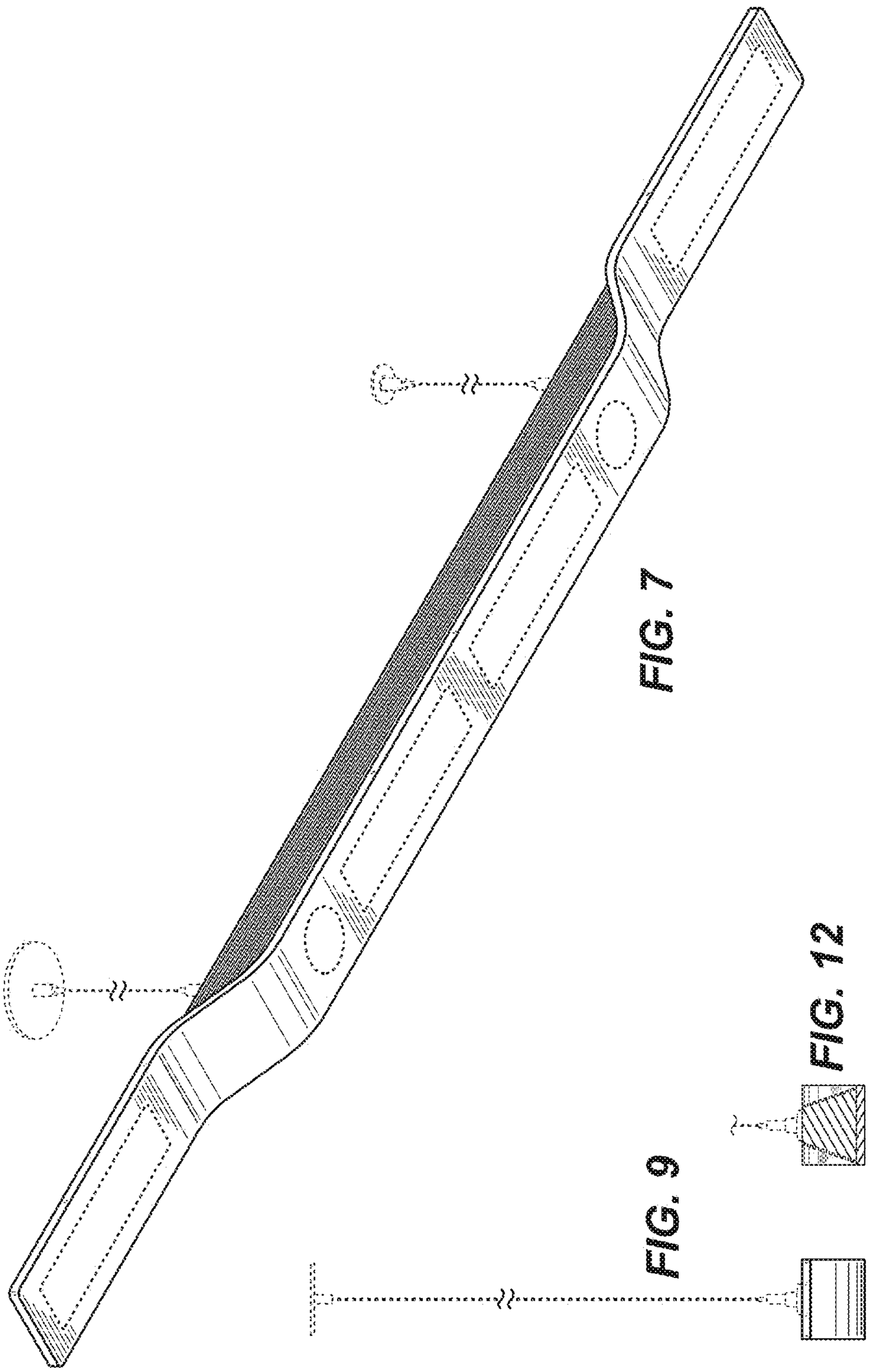

FIG. 7

FIG. 9

FIG. 12

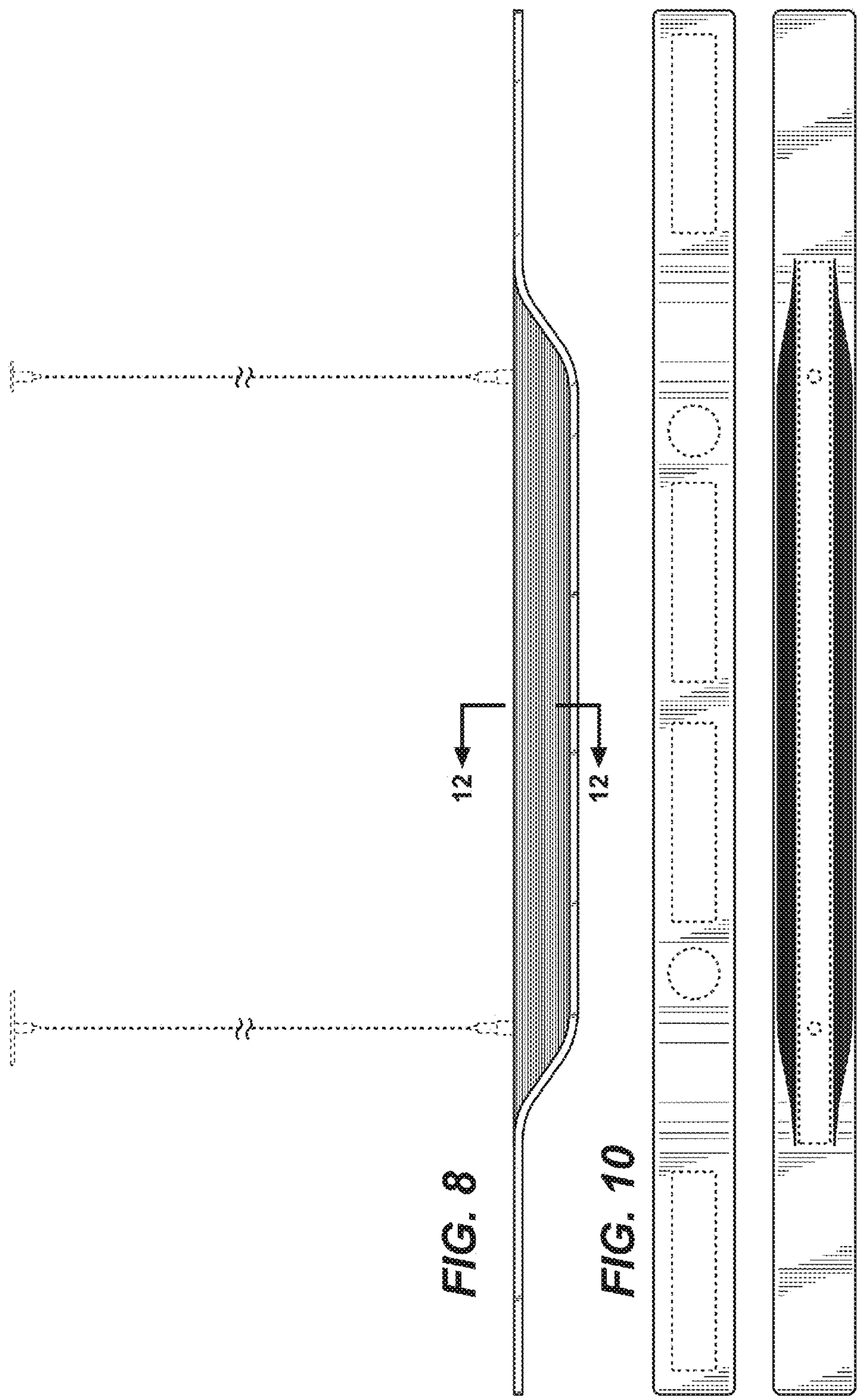

FIG. 8

FIG. 10

FIG. 11