US00D759631S

(12) United States Design Patent

Espinosa et al.

(10) Patent No.: US D759,631 S
(45) Date of Patent: ** Jun. 21, 2016

(54) **LOUDSPEAKER**

(71) Applicant: **Meyer Sound Laboratories, Incorporated**, Berkeley, CA (US)

(72) Inventors: **Pablo Espinosa**, Pleasanton, CA (US); **Michael Schneider**, Emeryville, CA (US); **Paul Bunning**, Berkeley, CA (US); **Jon M. Arneson**, Napa, CA (US); **Katrin M. Rawks**, El Cerrito, CA (US)

(73) Assignee: **Meyer Sound Laboratories, Incorporated**, Berkeley, CA (US)

(**) Term: **15 Years**

(21) Appl. No.: **29/538,347**

(22) Filed: **Sep. 2, 2015**

(51) **LOC (10) Cl.** **14-03**

(52) **U.S. Cl.**
USPC **D14/215**

(58) **Field of Classification Search**
USPC D14/167, 168, 170–172, 188, 194–196, D14/204, 207, 209.1, 210–216, 219, 221, D14/222, 224, 239, 496; 181/143, 144, 147, 181/148, 150, 153, 157, 198, 199; 381/300–303, 306, 332, 333, 336, 345, 381/361–364, 386–388; 369/6–12
CPC B60R 11/0217; G06F 1/1688; G10K 9/22; G10K 11/004; H03F 1/327; H04M 1/03; H04M 1/035; H04N 5/642; H04N 21/4852; H04R 1/02; H04R 1/06; H04R 1/021; H04R 1/025; H04R 1/026; H04R 1/028; H04R 1/105; H04R 1/323; H04R 1/403; H04R 1/2803; H04R 1/2834; H04R 5/02; H04R 7/20; H04R 9/06; H04R 9/025; H04R 2201/021; H04R 2400/00; H04R 2400/07; H04R 2499/11; H04R 2499/13; H04R 2499/15; H04S 3/00; H04S 7/30
See application file for complete search history.

(56) **References Cited**

U.S. PATENT DOCUMENTS

D271,967	S	*	12/1983	Meyer	D14/214
D360,417	S	*	7/1995	Mark	D14/215
D373,359	S		9/1996	Meyer et al.	
D439,238	S	*	3/2001	Mackie	D14/214
D439,239	S	*	3/2001	Ito	D14/214
D542,275	S	*	5/2007	Hibino	D14/214
D598,897	S		8/2009	Arneson et al.	
D599,324	S	*	9/2009	Shen	D14/196
D599,325	S		9/2009	Arneson et al.	
D657,777	S	*	4/2012	Jursch	D14/215
D668,634	S	*	10/2012	Suzuki	D14/215
8,406,445	B1		3/2013	Arneson et al.	
D698,335	S	*	1/2014	Plattard	D14/210

OTHER PUBLICATIONS

"UPA-1P: Compact Wide Coverage Loudspeaker," Meyer Sound Ultraseries Datasheet, 2005.

(Continued)

Primary Examiner — Keli L Hill
(74) *Attorney, Agent, or Firm* — Beeson Skinner Beverly, LLP

(57) **CLAIM**

The ornamental design for a loudspeaker, as shown and described.

DESCRIPTION

FIG. **1** is a top front perspective view of a loudspeaker showing our new design;
FIG. **2** is a front elevational view thereof;
FIG. **3** is a right side elevational view thereof, the left side being a mirror image;
FIG. **4** is a rear elevational view thereof; and,
FIG. **5** is a top plan view thereof.
The broken-line rectangles shown in FIGS. **2** and **4** are boundary lines. The regions within the boundary lines form no part of the claimed design.

1 Claim, 3 Drawing Sheets

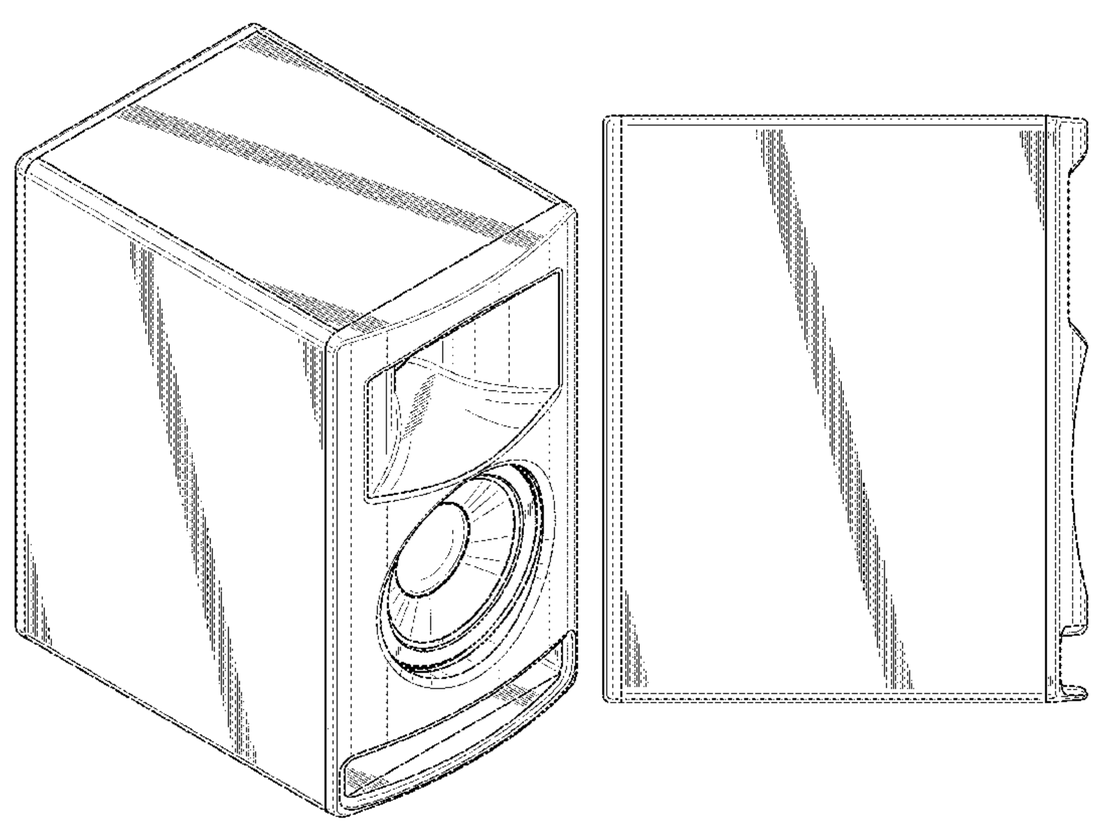

(56) **References Cited**

OTHER PUBLICATIONS

"UPJ-1P: Compact VariO Loudspeaker," Meyer Sound Ultraseries Datasheet, 2005.

"UPQ-2P: Narrow Coverage Loudspeaker," Meyer Sound Ultraseries Datasheet, 2008.

* cited by examiner

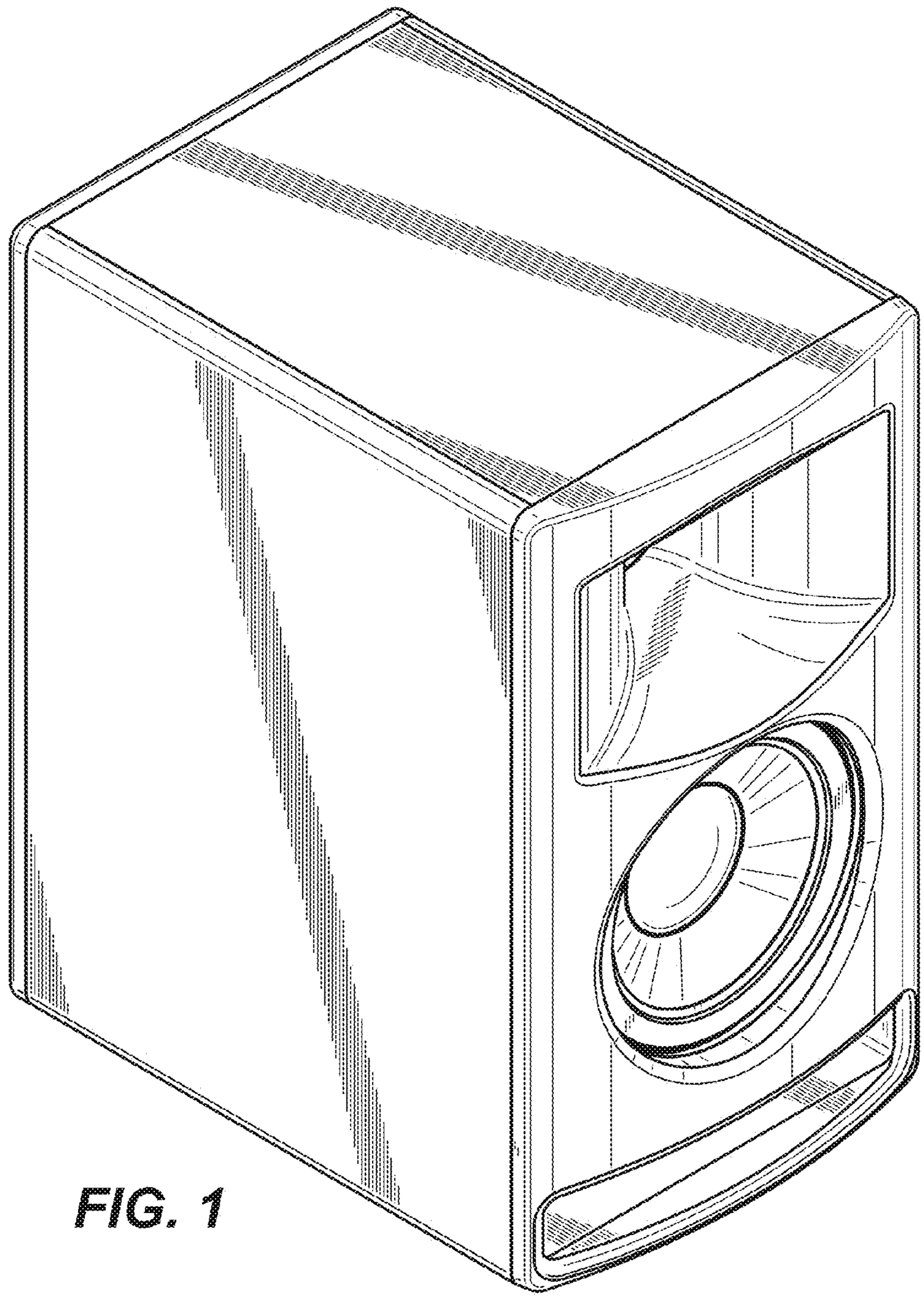

FIG. 1

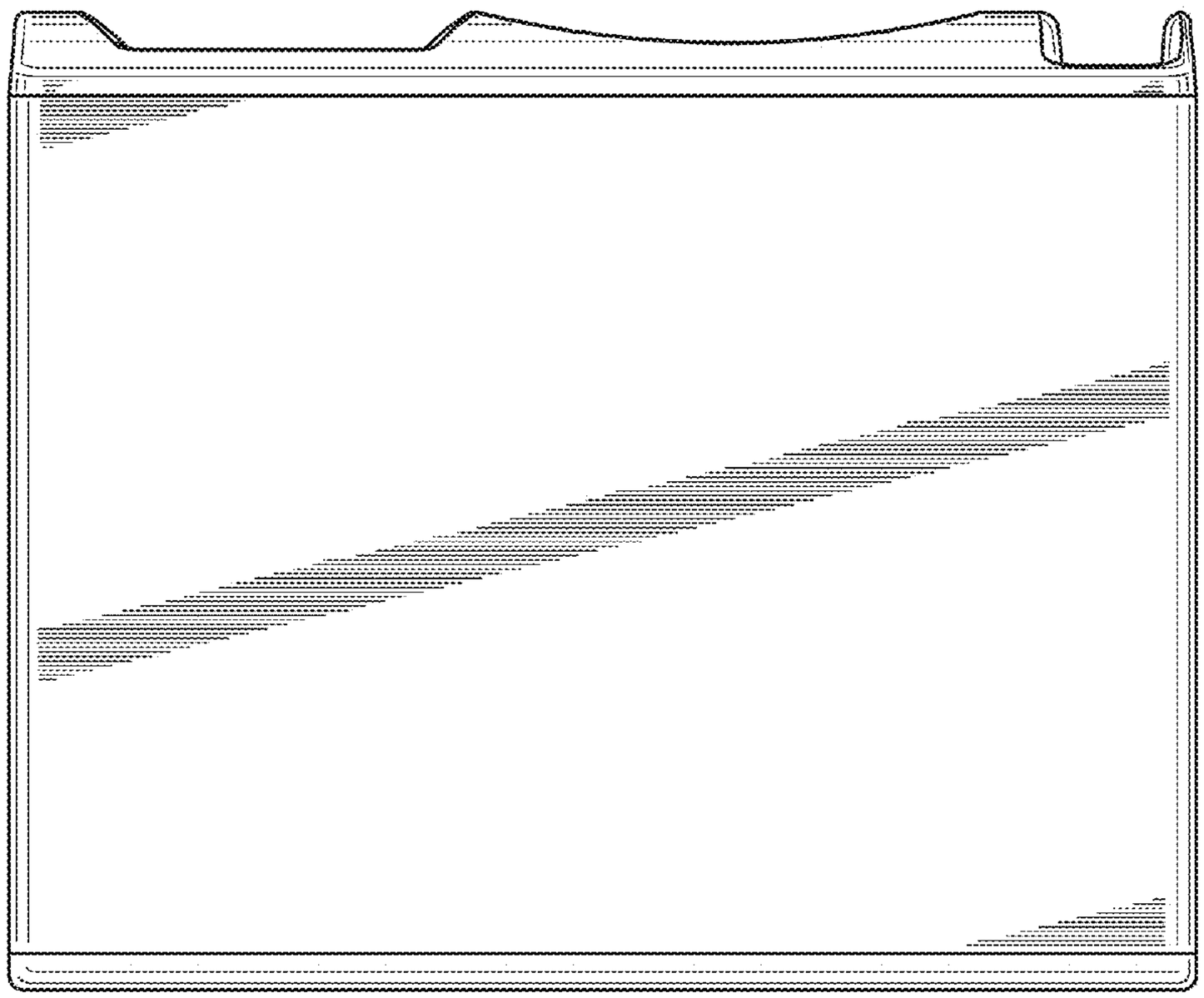

FIG. 3

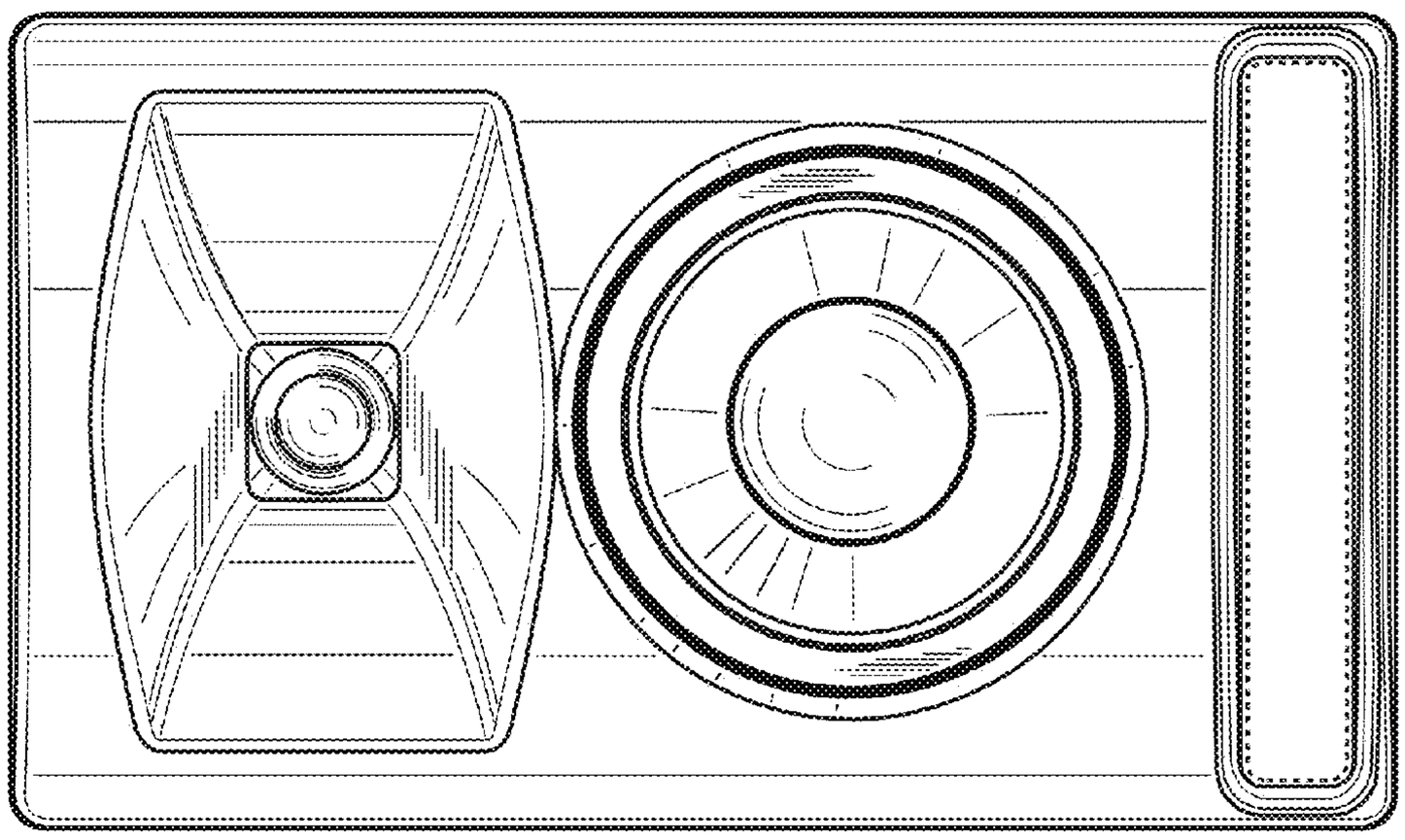

FIG. 2

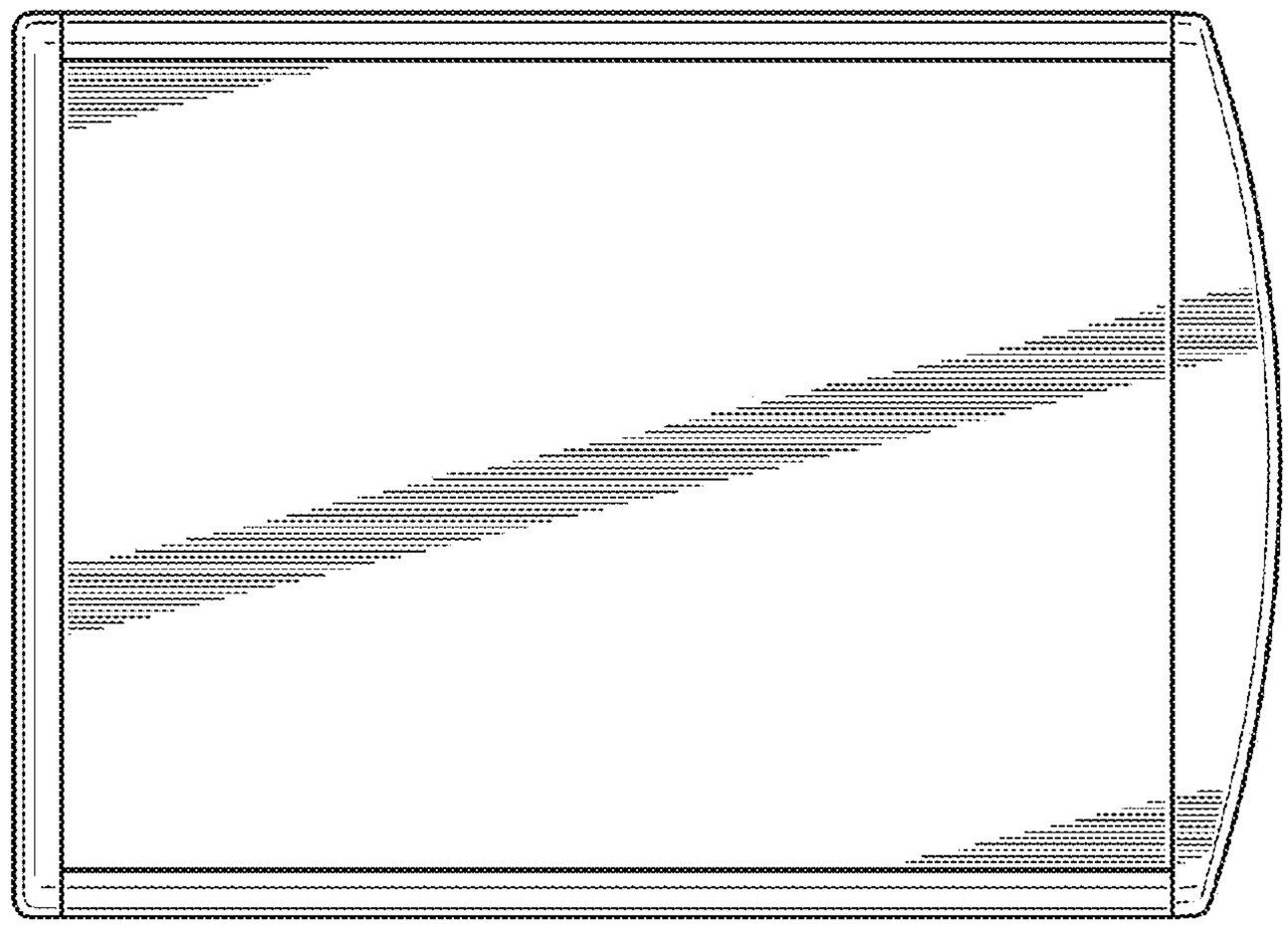

FIG. 5

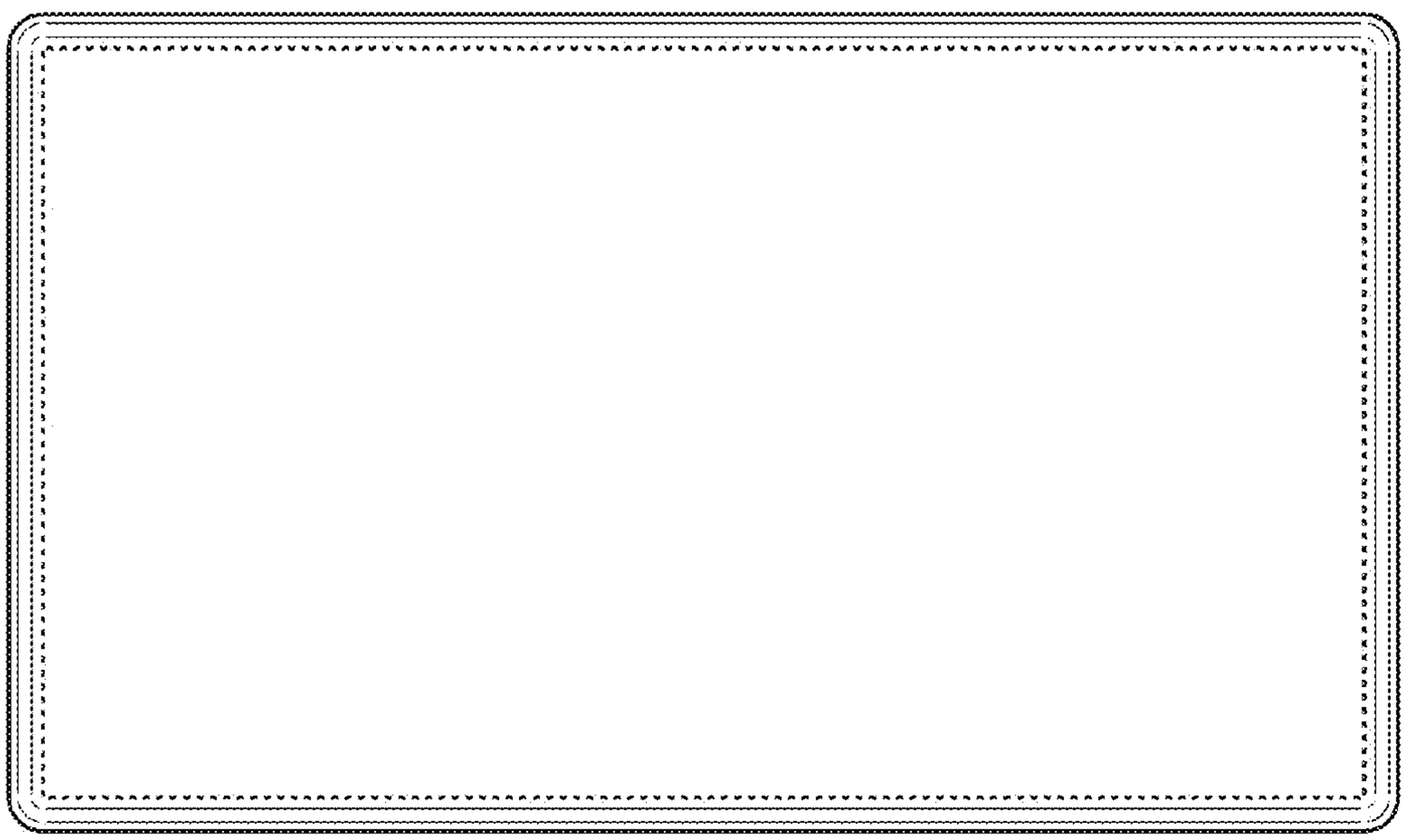

FIG. 4