US00D759147S

(12) United States Design Patent

Harrison et al.

(10) Patent No.: US D759,147 S
(45) Date of Patent: ** Jun. 14, 2016

(54) **CAMERA MOUNT**

(71) Applicant: **GoPro, Inc.**, San Mateo, CA (US)

(72) Inventors: **Ryan Harrison**, El Granada, CA (US); **Mark Costa**, Menlo Park, CA (US); **Emily Clopp**, San Francisco, CA (US)

(73) Assignee: **GoPro, Inc.**, San Mateo, CA (US)

(**) Term: **14 Years**

(21) Appl. No.: **29/524,032**

(22) Filed: **Apr. 15, 2015**

(51) **LOC (10) Cl.** **16-05**

(52) **U.S. Cl.**
USPC **D16/242**

(58) **Field of Classification Search**
USPC D16/134, 136, 208, 213–219, 235, D16/237–245, 250; D14/203.4, 218, 224, D14/250–253, 345, 440, 449; D8/363, 373, D8/394
CPC G03B 17/02–17/04; G03B 17/14; G03B 17/56; G03B 17/561–17/568; G03B 21/20–21/2066; G03B 15/041–15/0436; G02B 7/02–7/04; G02B 7/14; H04N 5/2251–5/2554; F16M 11/02; F16M 11/20; F16M 11/40
See application file for complete search history.

(56) **References Cited**

U.S. PATENT DOCUMENTS

D209,013	S	*	10/1967	McElroy	D8/383
D366,887	S	*	2/1996	Wood	D16/242
D372,189	S	*	7/1996	Andis	D28/73
D395,996	S	*	7/1998	Fischer	D8/349
D399,230	S	*	10/1998	Tenne	D16/237
5,842,069	A		11/1998	Konno	
5,887,375	A		3/1999	Watson	
6,315,180	B1		11/2001	Watkins	
6,654,235	B2		11/2003	Imsand	
D483,789	S	*	12/2003	Dordick	D16/242
D506,493	S	*	6/2005	Naito	D13/133
D602,974	S	*	10/2009	Zen	D16/242
D631,081	S	*	1/2011	Richter	D16/242
8,014,656	B2		9/2011	Woodman	
D649,576	S	*	11/2011	Jannard	D16/242
8,199,251	B2		6/2012	Woodman	
8,325,270	B2		12/2012	Woodman	

(Continued)

FOREIGN PATENT DOCUMENTS

EP 0845399 A2 6/1998

OTHER PUBLICATIONS

GoPro, Inc., "Grab Bag of Mounts," 2014, 2 Pages, [online][Archived on webarchive.org on Mar. 29, 2014][Retrieved on Aug. 31, 2015] Retrieved from the internet <URL:https://web.archive.org/web/20140329112413/http:/gopro.com/camera-mounts/grab-bag-of-mounts#features>.

(Continued)

Primary Examiner — Susan Bennett Hattan
Assistant Examiner — Vy Koenig
(74) *Attorney, Agent, or Firm* — Fenwick & West LLP

(57) **CLAIM**

The ornamental design for a camera mount, as shown and described.

DESCRIPTION

FIG. **1** is a front, top, and right side perspective view of a camera mount;
FIG. **2** is a rear, bottom, and left side perspective view thereof;
FIG. **3** is a front elevational view thereof;
FIG. **4** is a rear elevational view thereof;
FIG. **5** is a left side elevational view thereof;
FIG. **6** is a right side elevational view thereof;
FIG. **7** is a top plan view thereof; and,
FIG. **8** is a bottom plan view thereof.

1 Claim, 8 Drawing Sheets

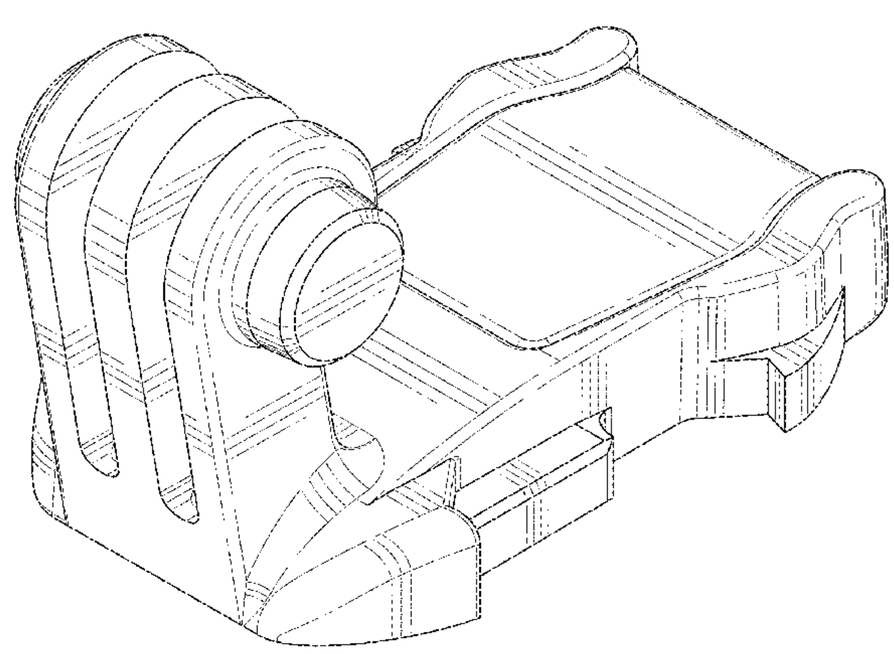

(56) **References Cited**

U.S. PATENT DOCUMENTS

D675,661	S *	2/2013	Jannard	D16/242
D722,864	S *	2/2015	Greenthal	D8/382
D722,865	S *	2/2015	Greenthal	D8/382
9,033,596	B2	5/2015	Samuels	
2014/0027591	A1	1/2014	Fountain	

OTHER PUBLICATIONS

PCT International Search Report for Written Opinion for PCT/US2013/062061, Mar. 3, 2014, 15 Pages.

* cited by examiner

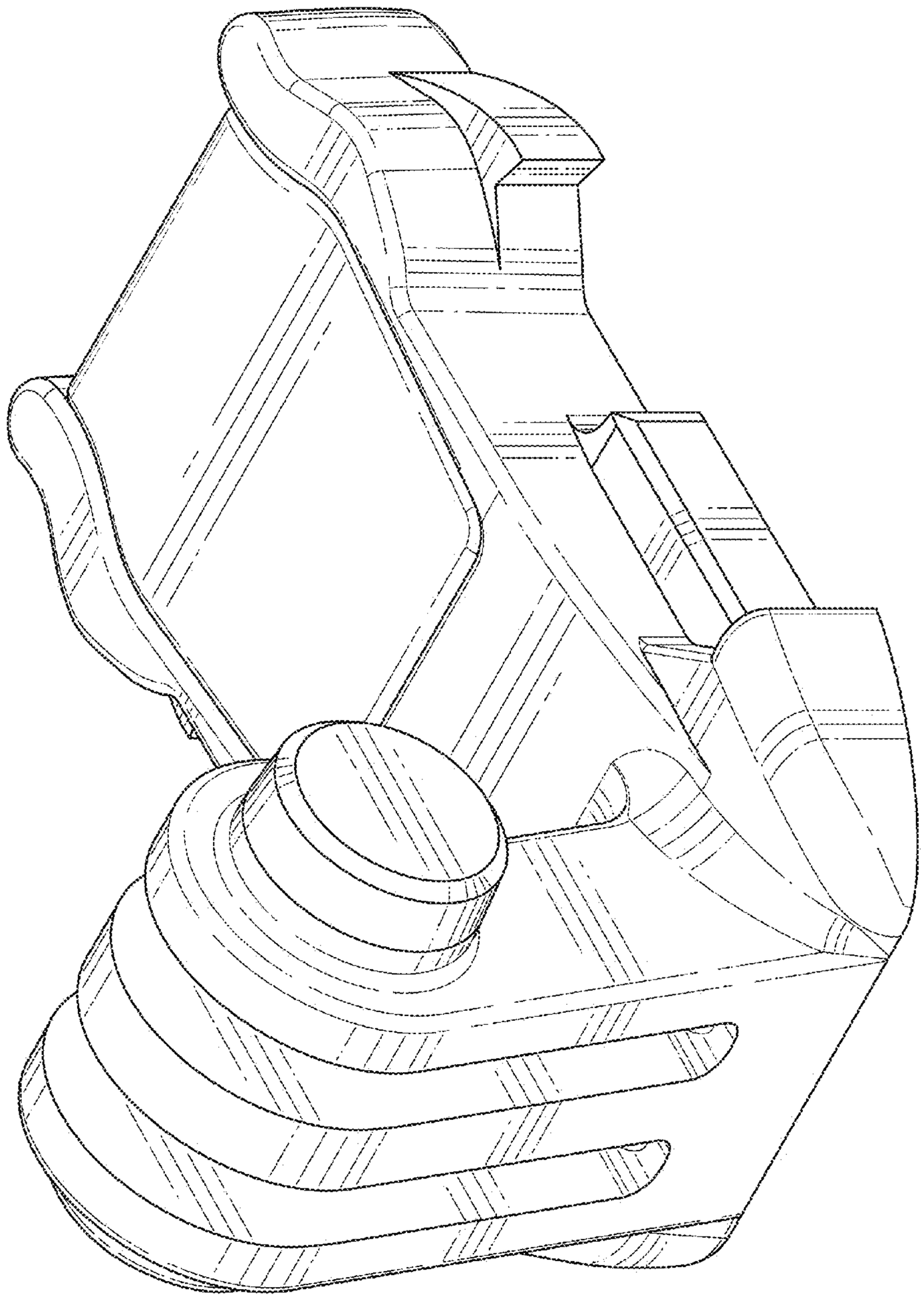

FIG. 1

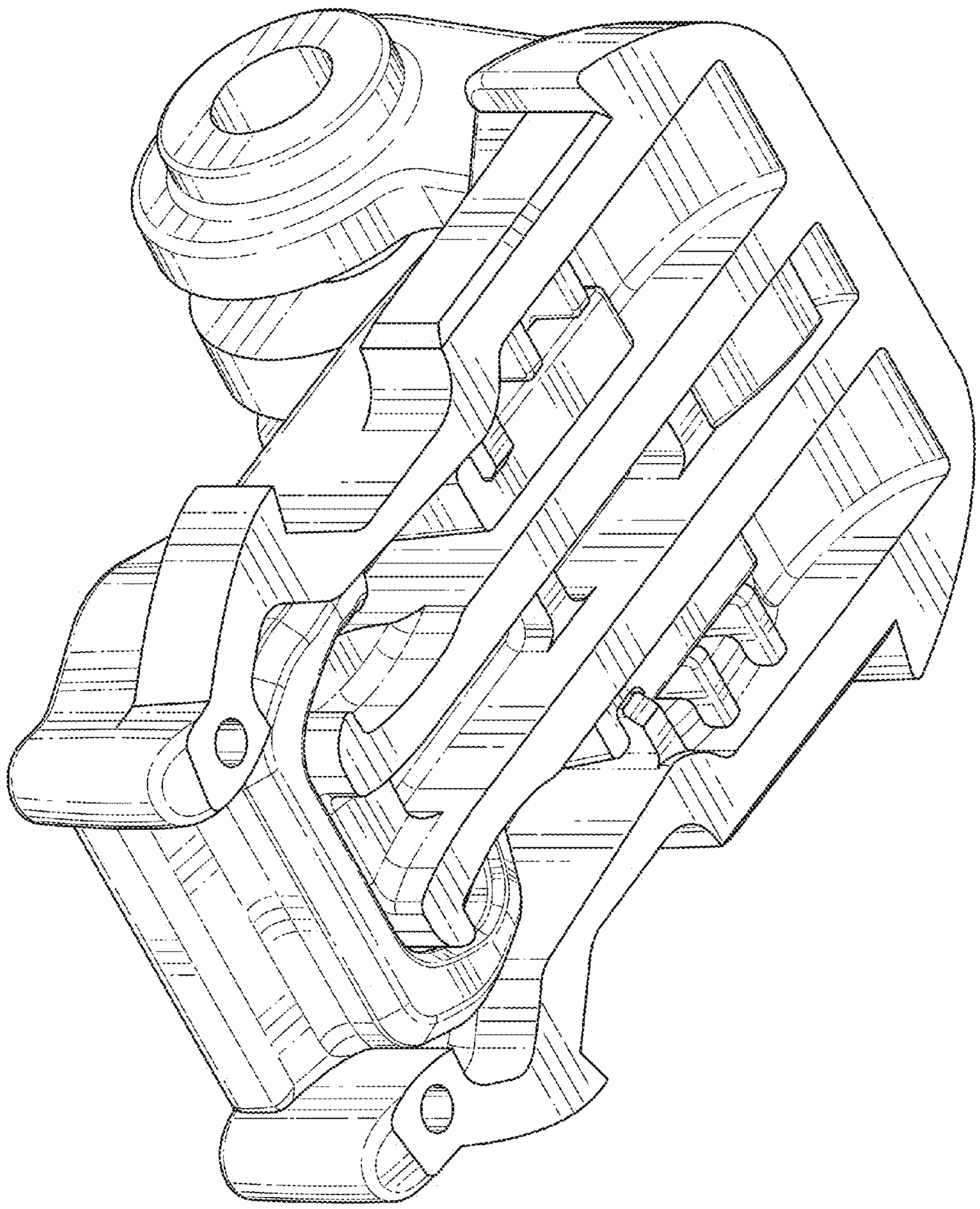

FIG. 2

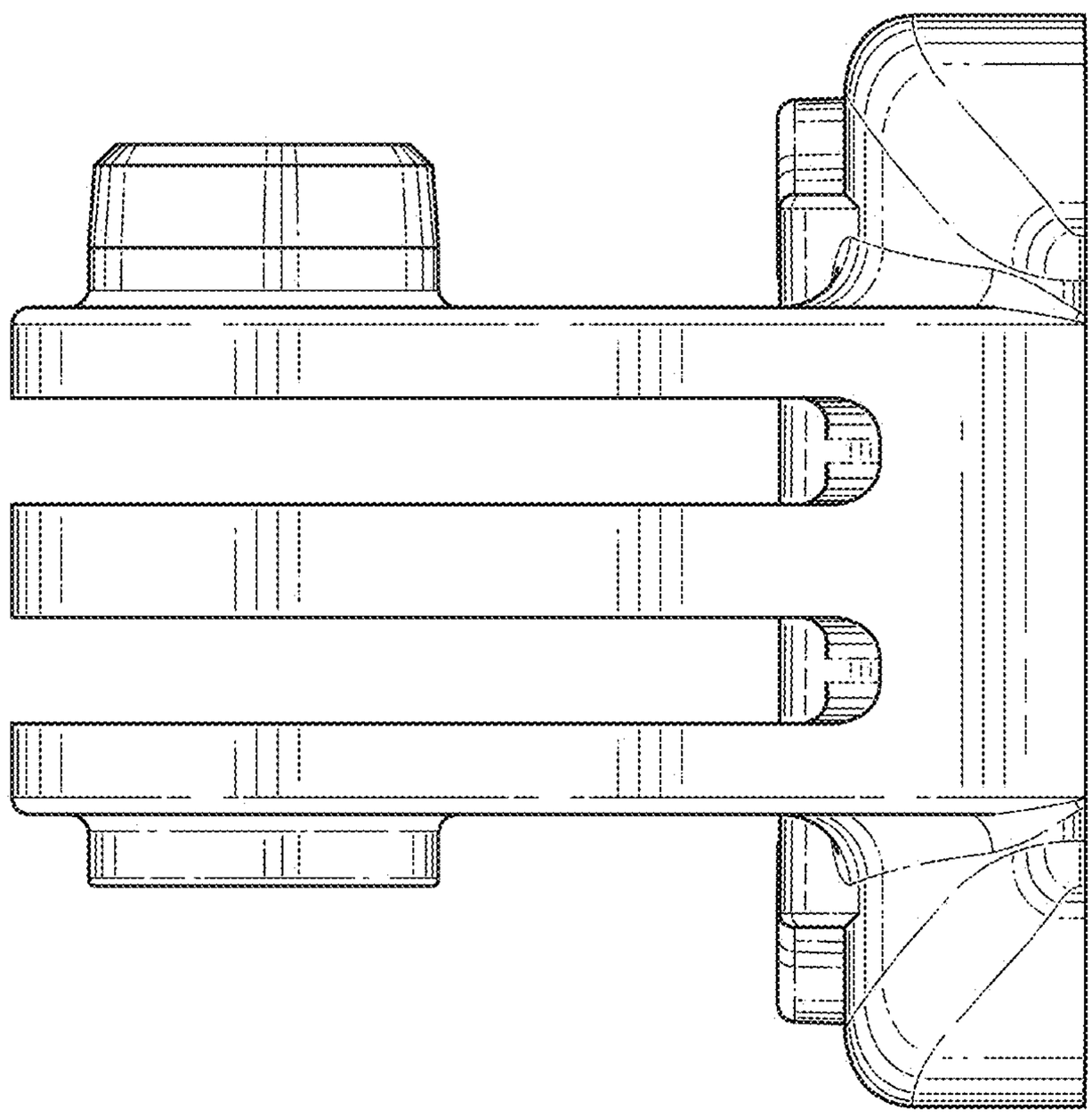

FIG. 3

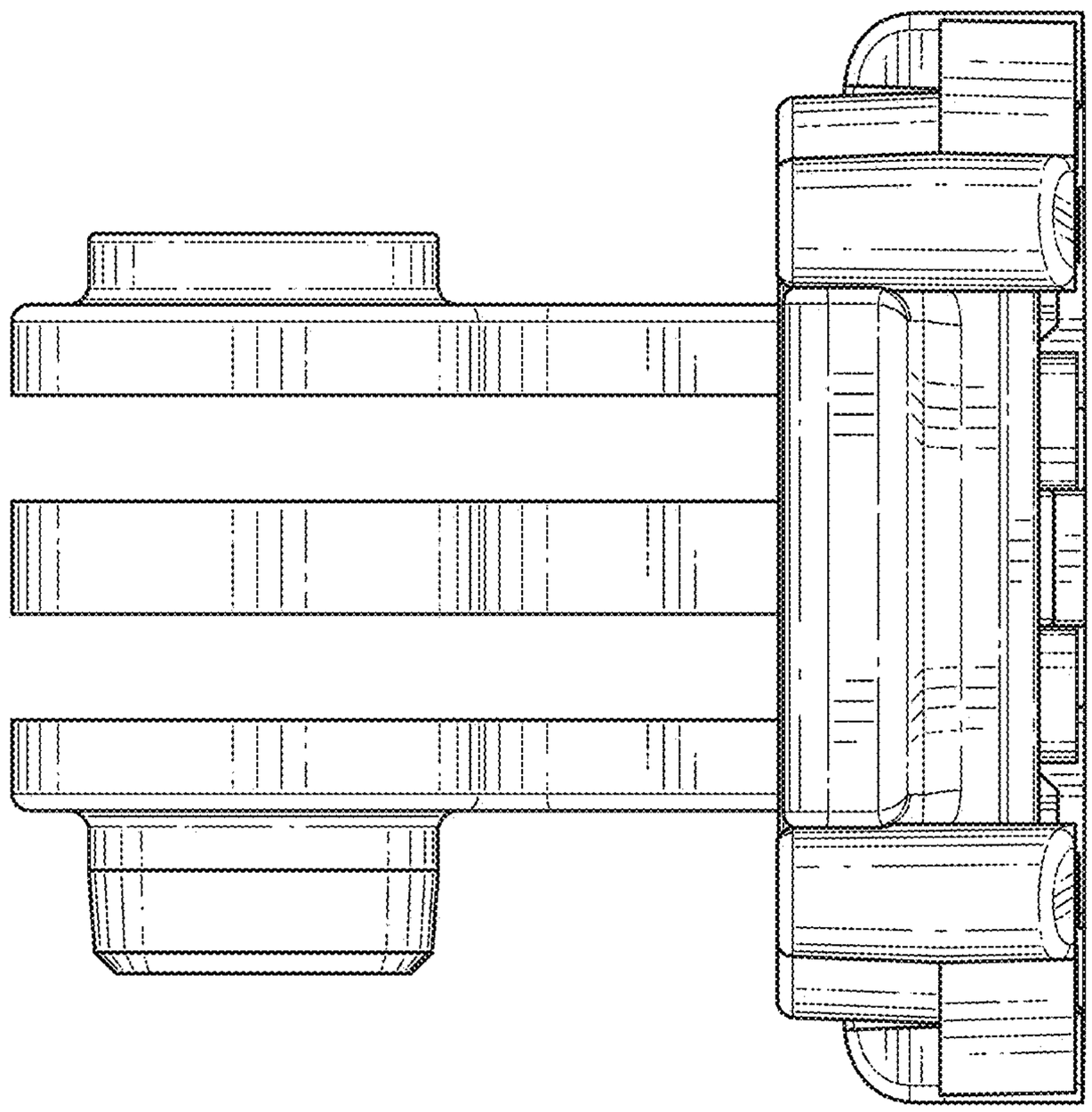

FIG. 4

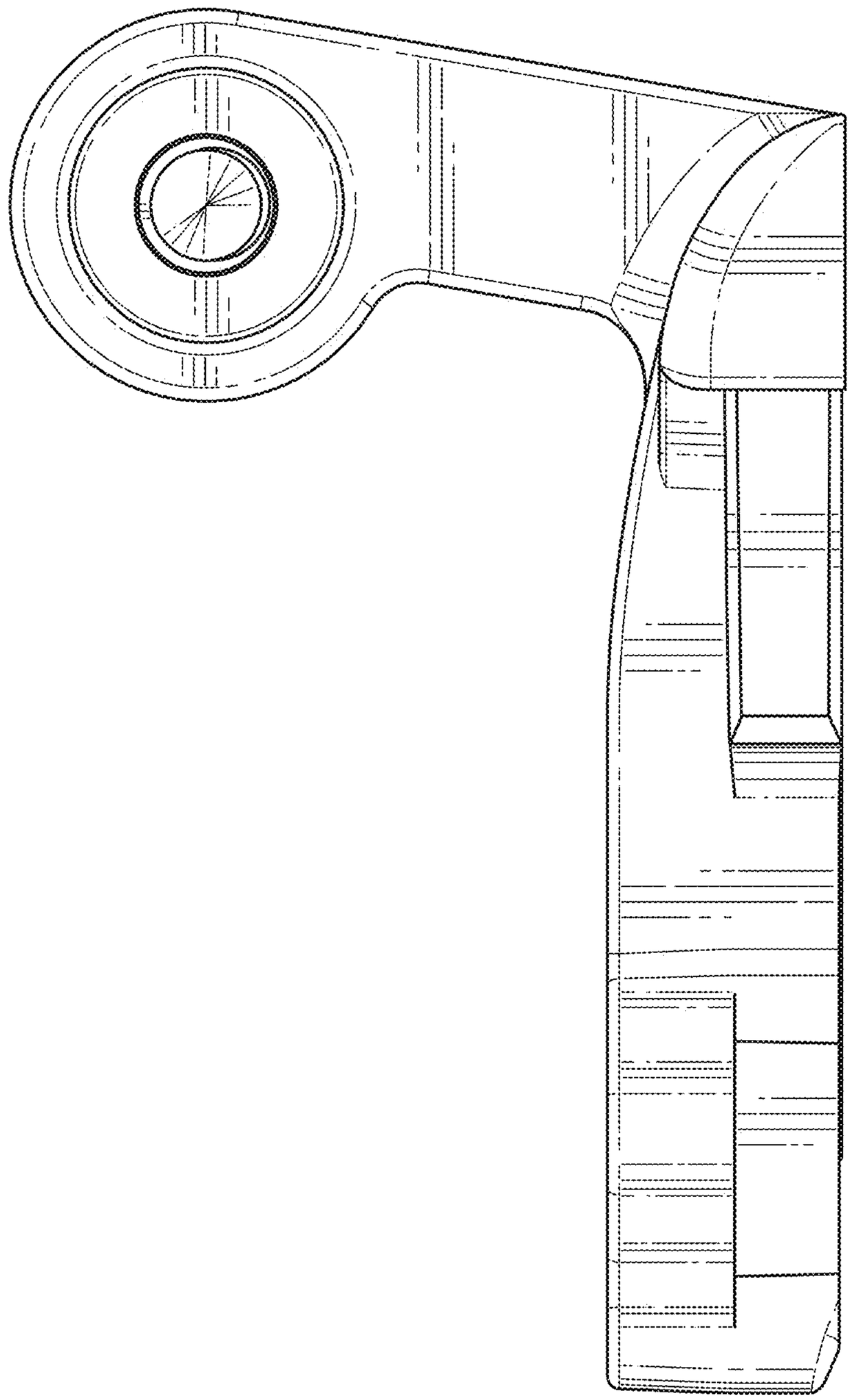

FIG. 5

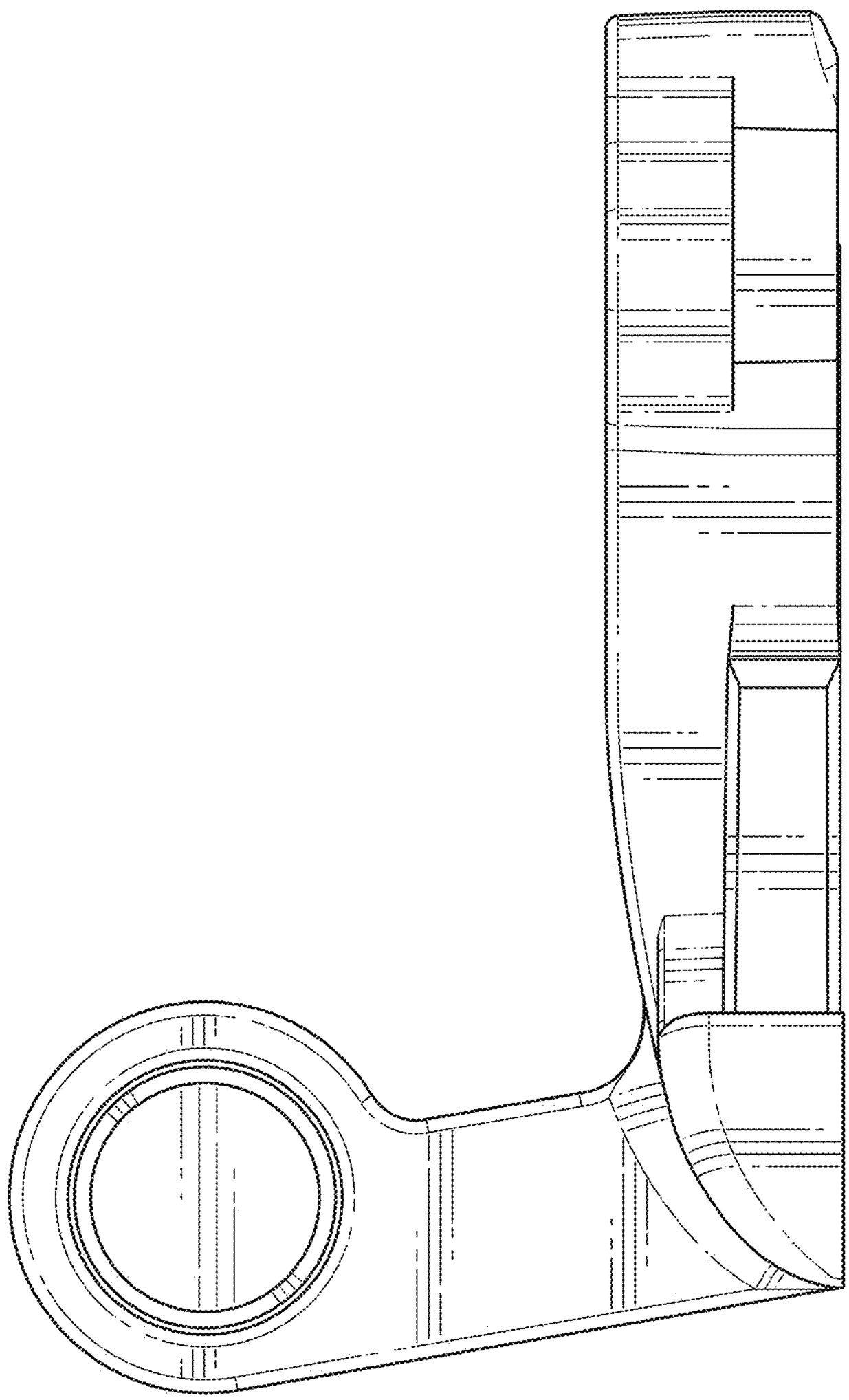

FIG. 6

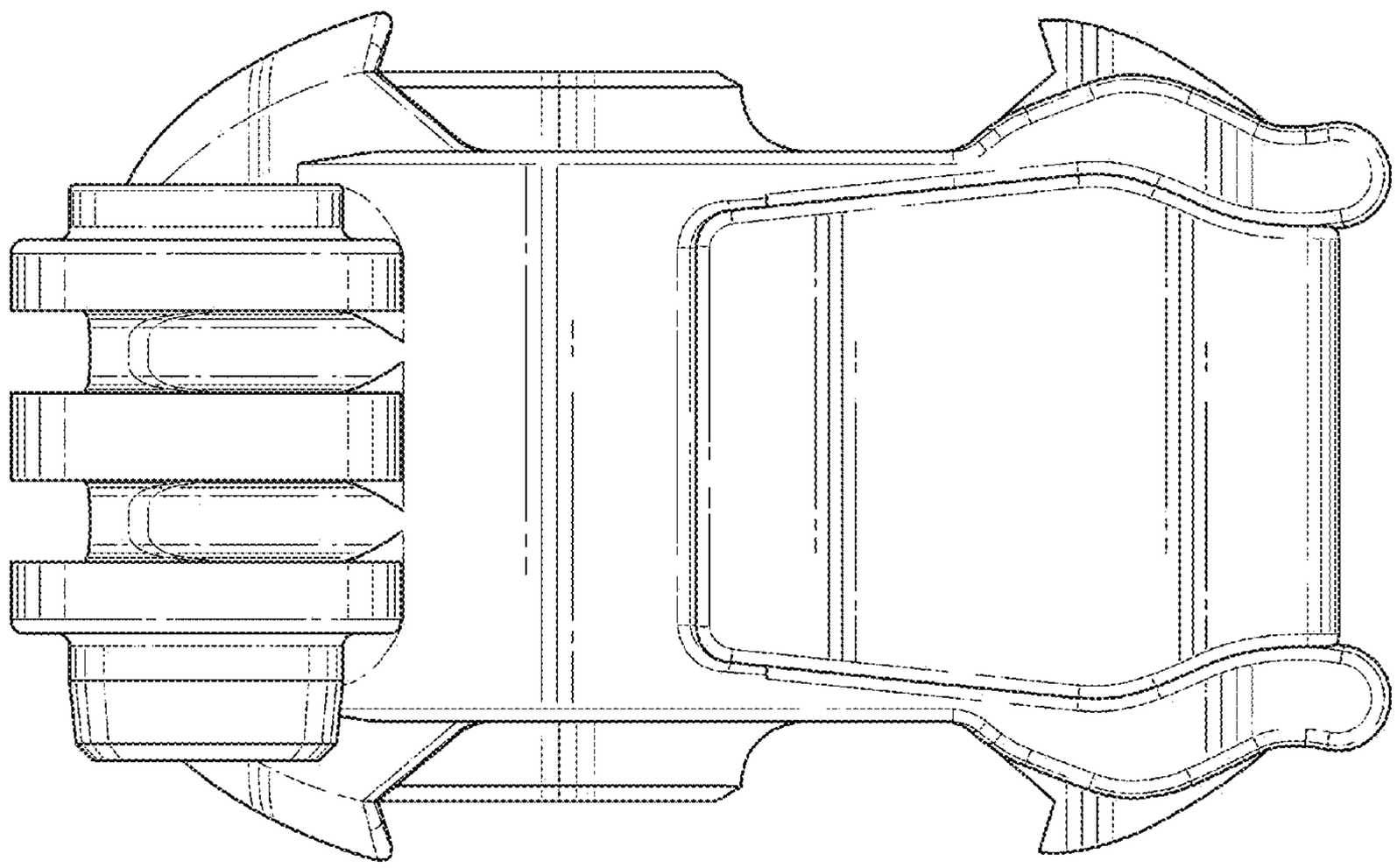

FIG. 7

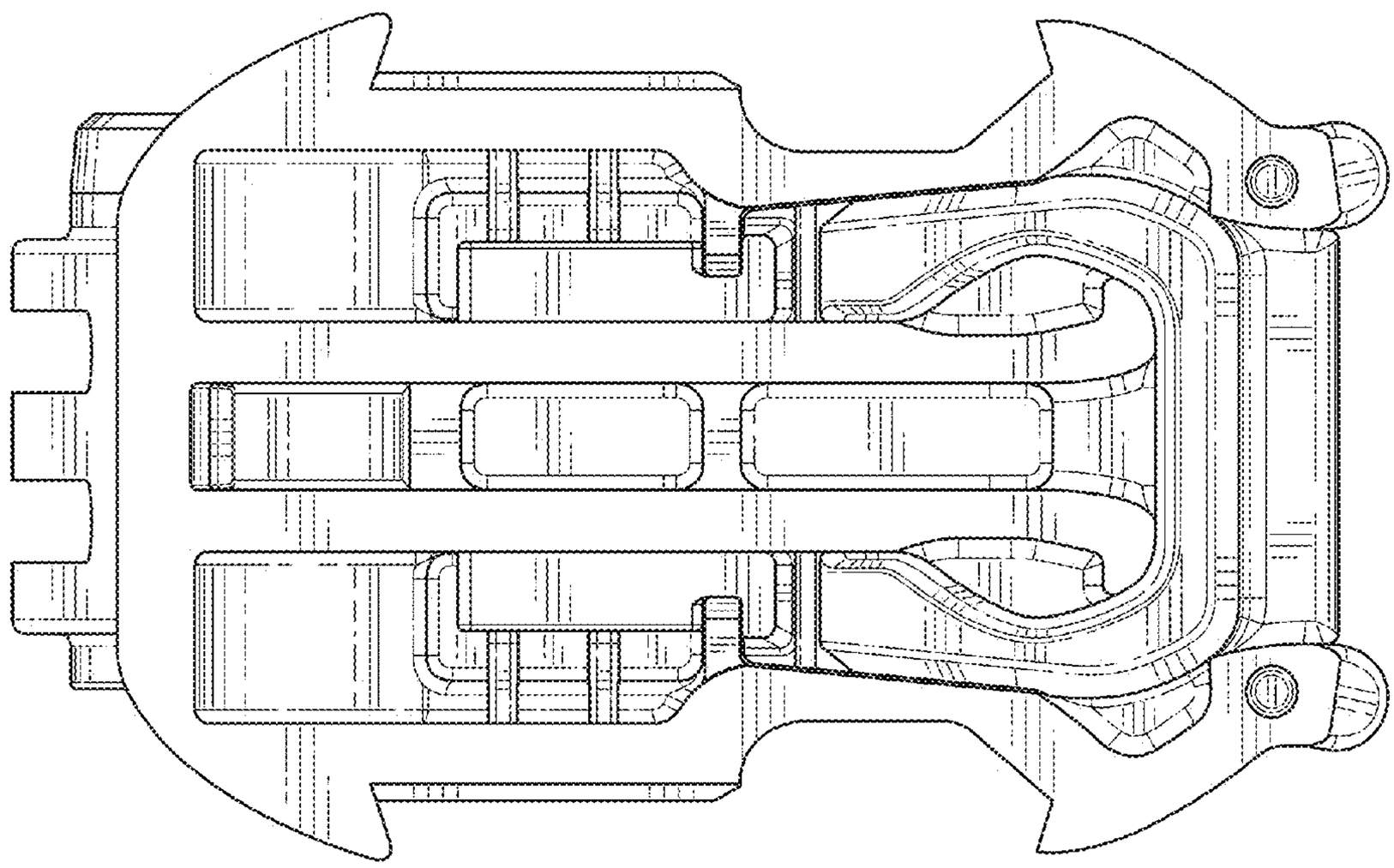

FIG. 8