US00D758977S

(12) United States Design Patent
Song

(10) Patent No.: US D758,977 S
(45) Date of Patent: ** Jun. 14, 2016

(54) **LED COMPONENT**

(71) Applicant: **Kingbright Electronic Co., Ltd.**, New Taipei (TW)

(72) Inventor: **Wen-Joe Song**, New Taipei (TW)

(73) Assignee: **KINGBRIGHT ELECTRONICS CO. LTD.** (TW)

(**) Term: **15 Years**

(21) Appl. No.: **29/529,262**

(22) Filed: **Jun. 5, 2015**

(51) **LOC (10) Cl.** **13-03**

(52) **U.S. Cl.**
USPC **D13/180**

(58) **Field of Classification Search**
USPC D13/180; D26/1
CPC ... H01L 25/167; H01L 25/0753; H01L 27/15; H01L 27/156; H01L 31/02; H01L 33/00; H01L 33/04; H01L 33/08; H01L 33/10; H01L 33/20; H01L 33/38; H01L 33/42; H01L 33/48; H01L 33/62; H01L 33/483; H01L 33/486; F21K 9/00; F21K 9/30; F21K 9/54
See application file for complete search history.

(56) **References Cited**

U.S. PATENT DOCUMENTS

RE36,614 E * 3/2000 Lumbard G09F 9/33 313/500
6,061,160 A * 5/2000 Maruyama H04B 10/114 313/512
D439,351 S * 3/2001 Kiba D26/37
6,486,543 B1 * 11/2002 Sano H01L 21/565 257/684
6,593,598 B2 * 7/2003 Ishinaga F21V 7/0091 257/100
D494,938 S * 8/2004 Kamada D13/182
6,847,116 B2 * 1/2005 Isokawa H01L 33/486 257/673
6,914,267 B2 * 7/2005 Fukasawa H01L 24/29 257/100
D515,519 S * 2/2006 Egoshi D13/180
7,002,185 B2 * 2/2006 Isokawa H01L 33/486 257/100
7,078,728 B2 * 7/2006 Ishii H01L 33/60 257/432
7,238,967 B2 * 7/2007 Kuwabara H01L 33/60 257/98
D555,113 S * 11/2007 Yen D13/180
7,300,326 B2 * 11/2007 Tanaka B29C 33/0055 257/E33.059
D576,574 S * 9/2008 Kobayakawa D13/180
D581,884 S * 12/2008 Yen D13/180
7,675,087 B1 * 3/2010 Cheng H01L 25/167 257/99
D634,718 S * 3/2011 Chuang D13/180
D724,550 S * 3/2015 Song D13/180
2002/0079837 A1 * 6/2002 Okazaki H01L 33/54 313/512
2007/0246731 A1 * 10/2007 Isokawa H01L 23/49838 257/99
2009/0045428 A1 * 2/2009 Lin H01L 25/0753 257/99

* cited by examiner

Primary Examiner — Selina Sikder
(74) *Attorney, Agent, or Firm* — Roger H. Chu

(57) **CLAIM**

The ornamental design for an LED component, as shown and described.

DESCRIPTION

FIG. **1** is a top, front and left side perspective view of an LED component showing my design;
FIG. **2** is a front elevation view thereof;
FIG. **3** is a rear elevation view thereof
FIG. **4** is a left side elevation view thereof
FIG. **5** is a right side elevation view thereof;
FIG. **6** is a top plan view thereof;
FIG. **7** is a bottom plan view thereof; and,
FIG. **8** is a bottom, front and right side perspective view thereof.
The broken line showing in the embodiments of FIGS. **1-8** are for illustrative purposes only and forms no part of the claimed design. The top layer can have be visually transparent or translucent as shown in the embodiments of FIGS. **1-8**.

1 Claim, 5 Drawing Sheets

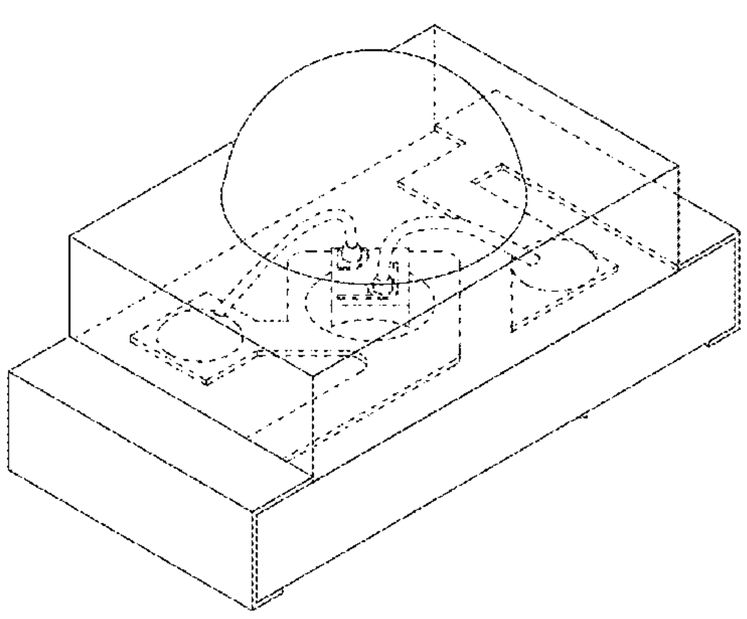

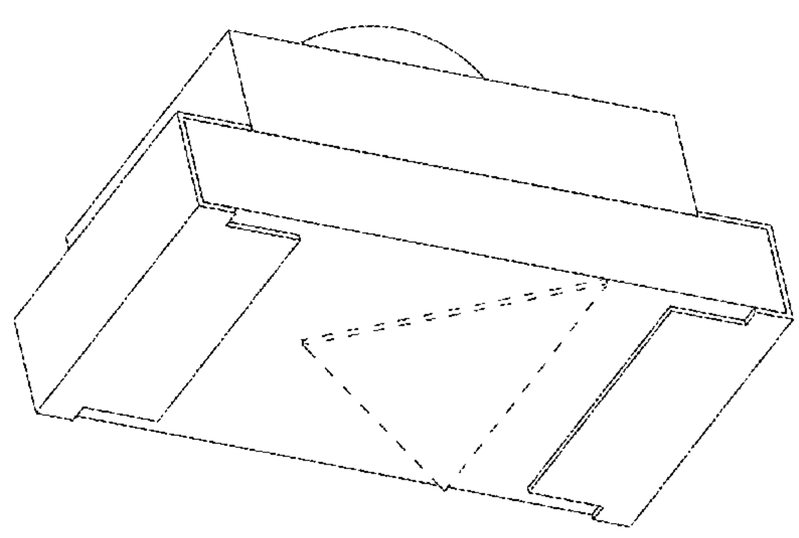

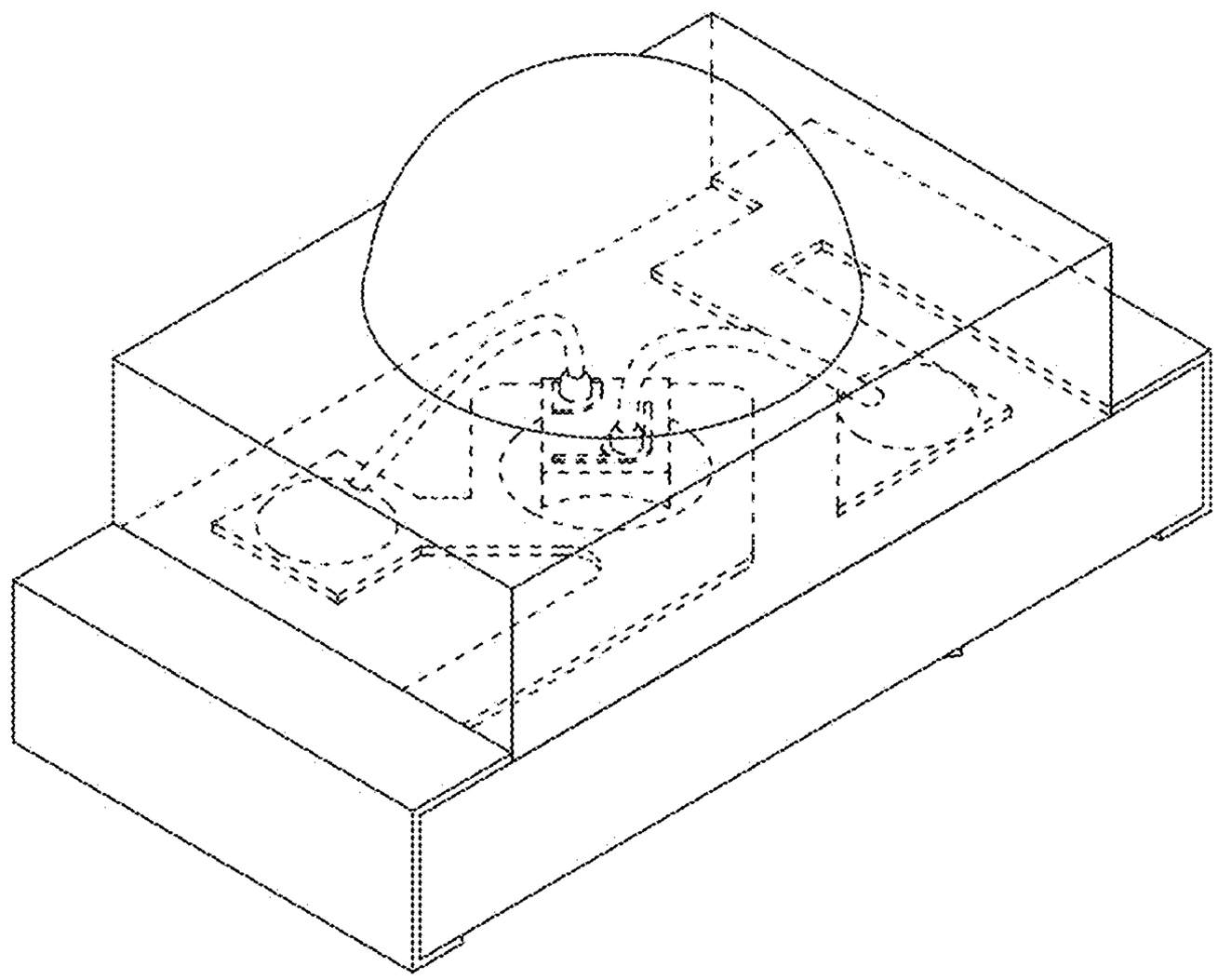

FIG. 1

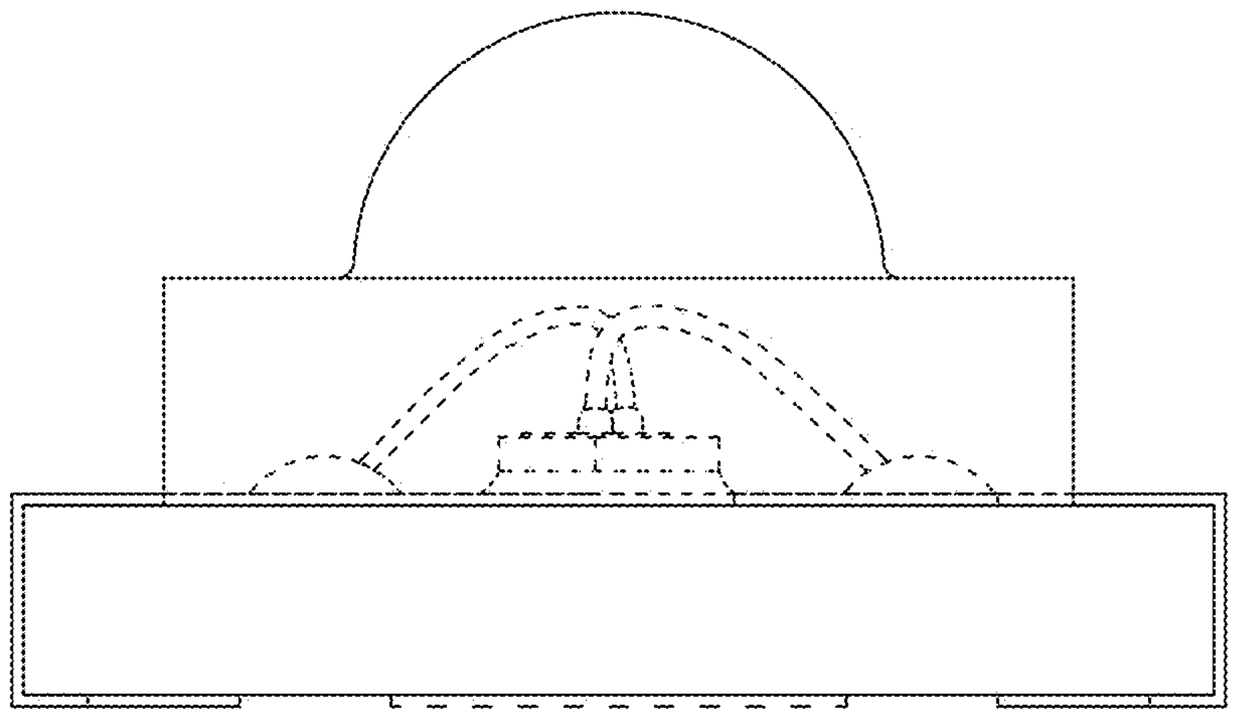

FIG. 2

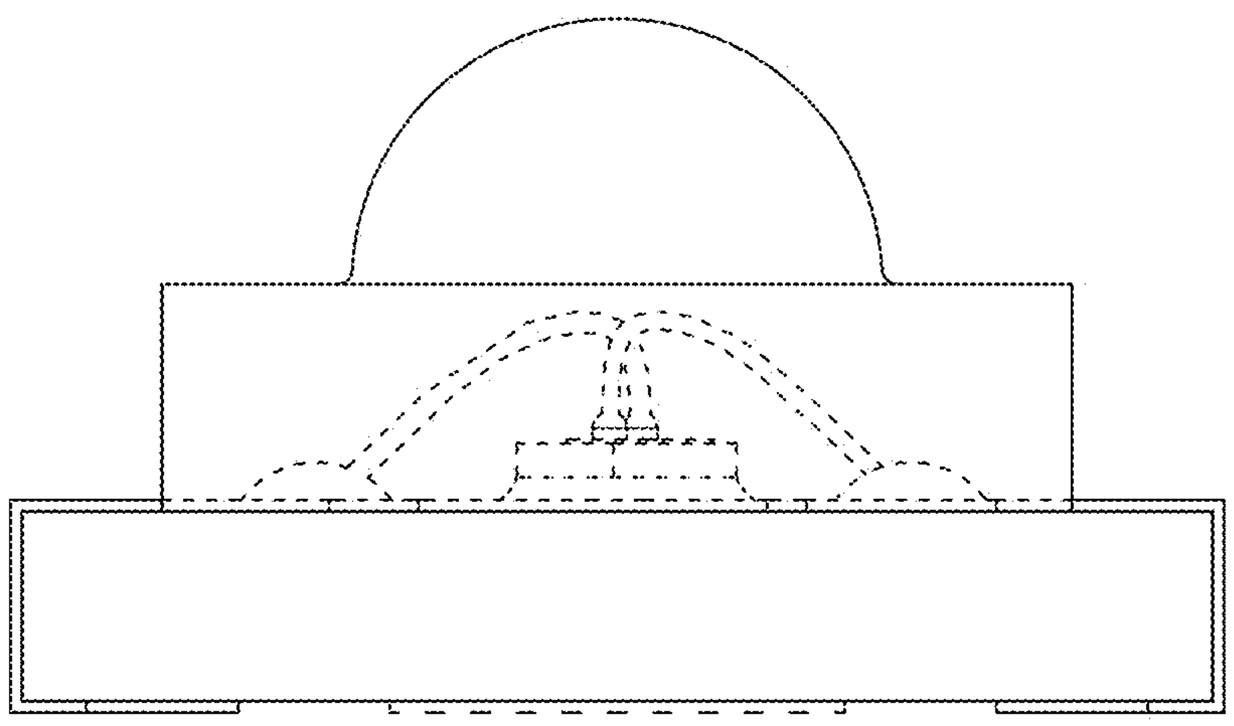

FIG. 3

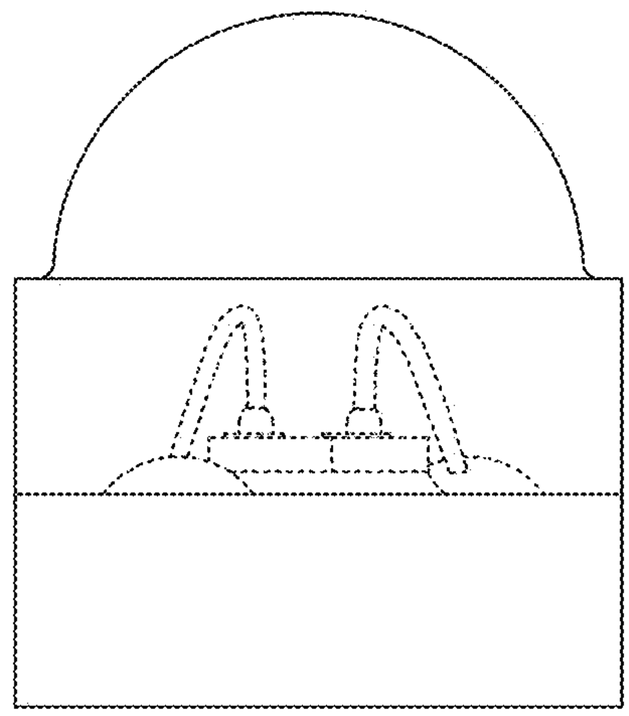

FIG. 4

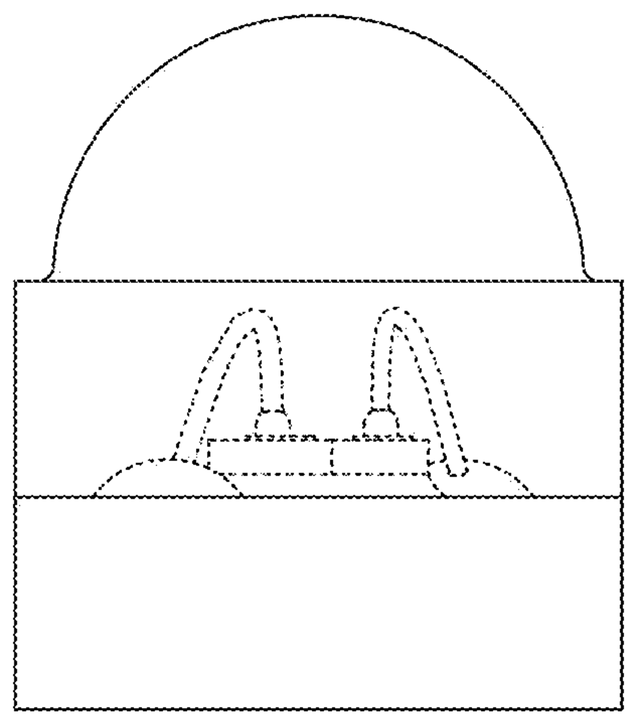

FIG. 5

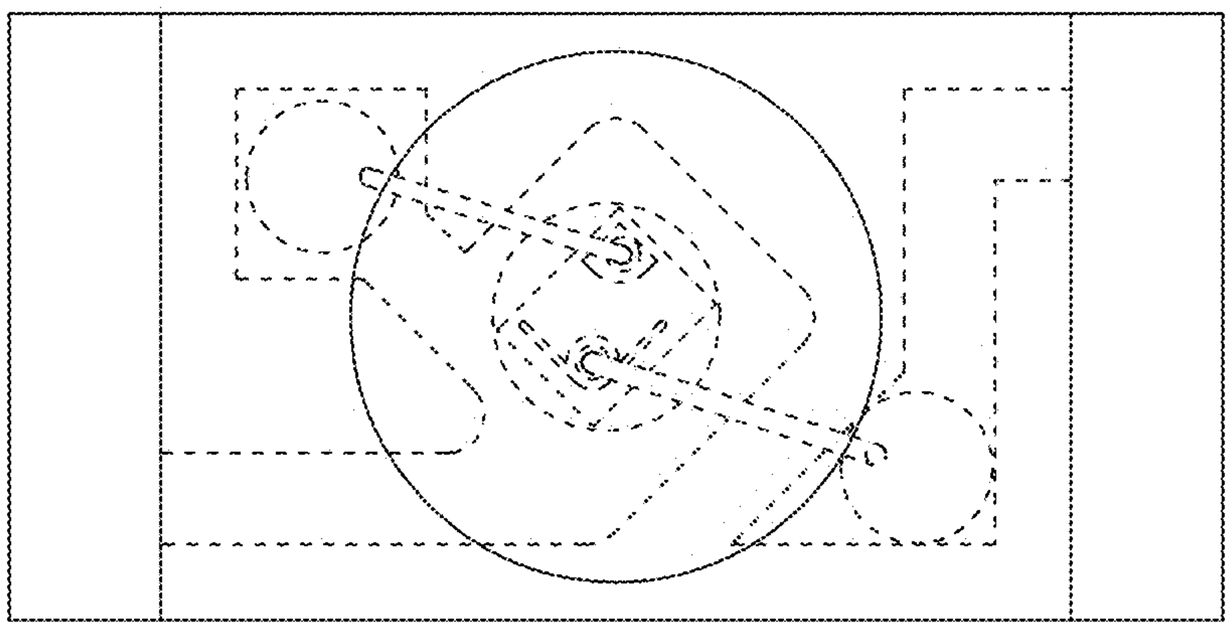

FIG. 6

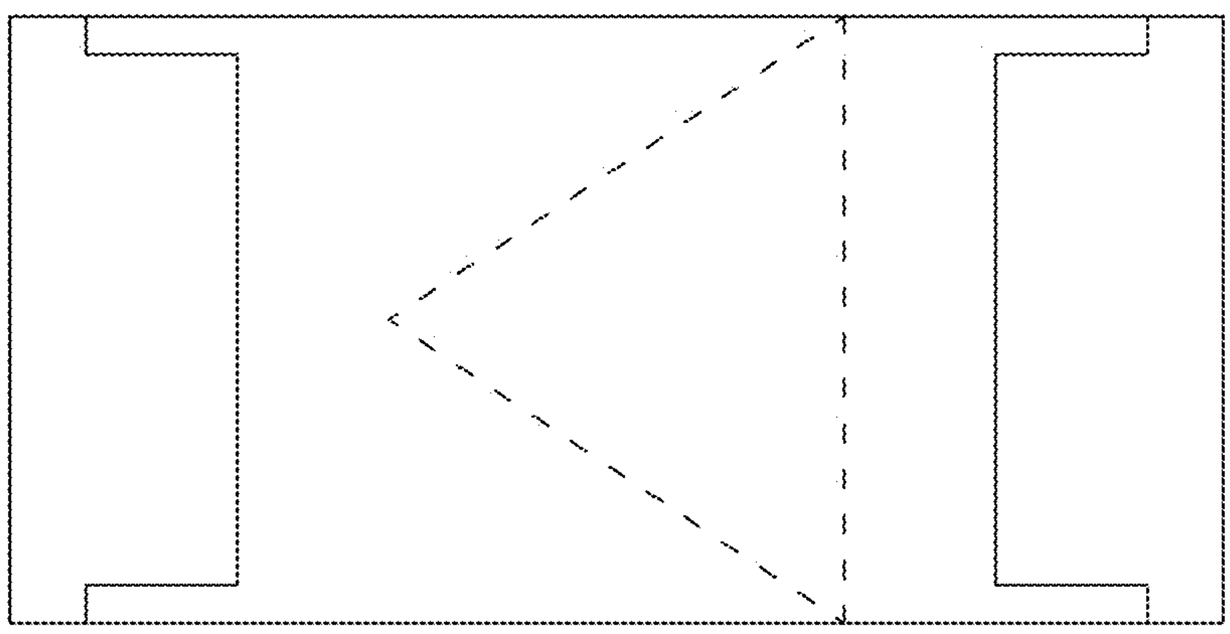

FIG. 7

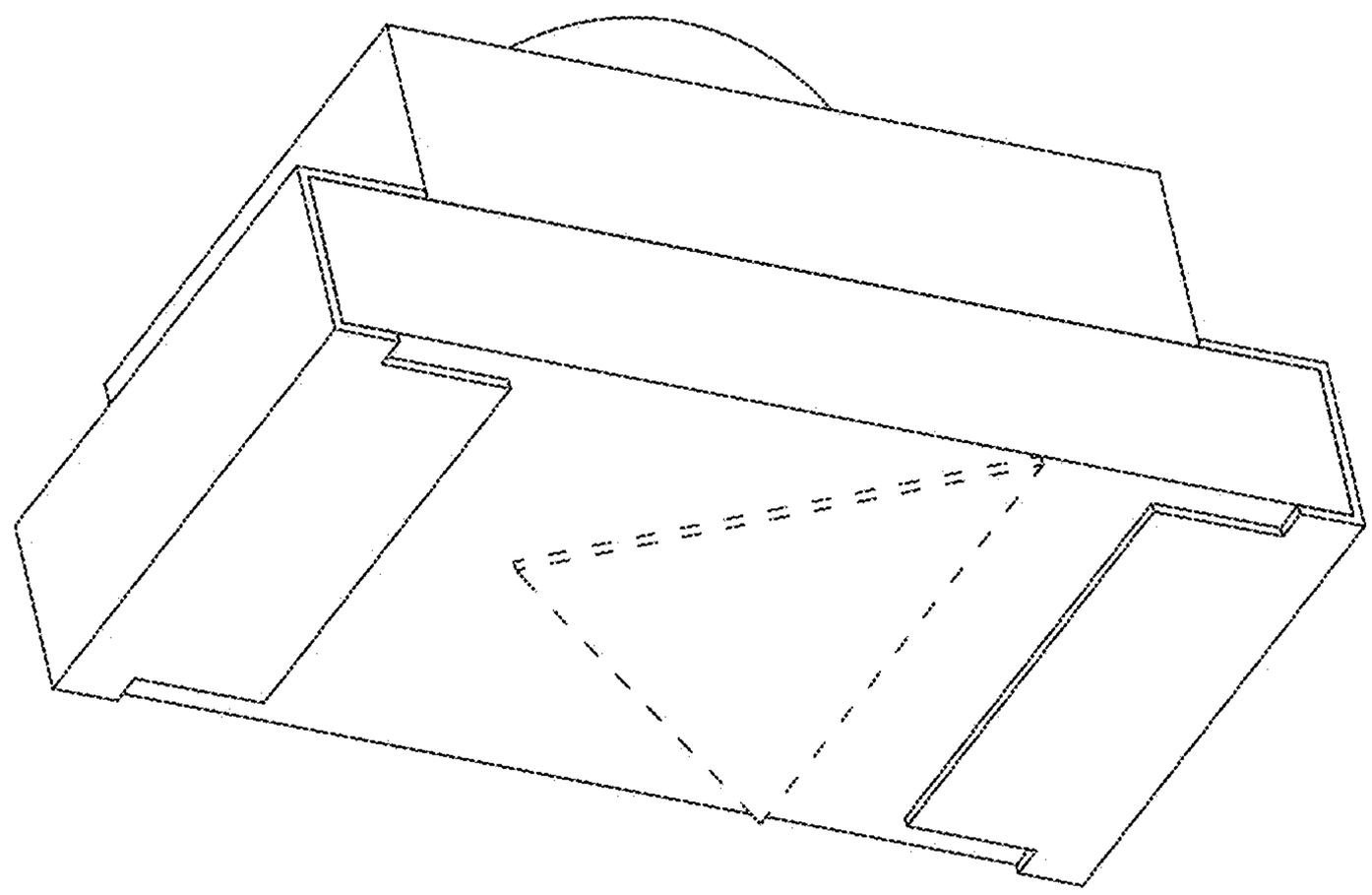

FIG. 8