US00D757971S

(12) United States Design Patent

Kovacik et al.

(10) Patent No.: US D757,971 S
(45) Date of Patent: ** May 31, 2016

(54) **HANDHELD WORK LIGHT**

(71) Applicant: **Alert Stamping & Manufacturing Co., Inc.**, Bedford Heights, OH (US)

(72) Inventors: **James D. Kovacik**, Brecksville, OH (US); **Paul S. Blanch**, Broadview Heights, OH (US)

(73) Assignee: **Alert Stamping & Manufacturing Co., Inc.**, Bedford Heights, OH (US)

(**) Term: **14 Years**

(21) Appl. No.: **29/482,646**

(22) Filed: **Feb. 20, 2014**

(51) **LOC (10) Cl.** **26-02**

(52) **U.S. Cl.**
USPC **D26/37**

(58) **Field of Classification Search**
USPC D26/37, 40, 41, 44, 46, 49; 362/157, 362/158, 183, 184, 194–196, 200–208
CPC F21V 33/00; F21V 14/025; F21V 21/406; F21Y 2101/02; F21L 17/00; F21L 13/08
See application file for complete search history.

(56) **References Cited**

U.S. PATENT DOCUMENTS

4,774,647	A		9/1988	Kovacik et al.	
5,154,511	A		10/1992	Veneskey	
6,231,207	B1		5/2001	Kennedy et al.	
D458,400	S		6/2002	Kovacik et al.	
D502,276	S		2/2005	Kovacik et al.	
6,857,756	B2		2/2005	Reiff et al.	
D520,164	S		5/2006	Brass et al.	
D527,478	S		8/2006	Kovacik et al.	
D527,479	S		8/2006	Poucki	
D528,240	S		9/2006	Kovacik et al.	
7,150,540	B2		12/2006	Kovacik et al.	
D543,301	S		5/2007	Chen	
D556,926	S		12/2007	Thirouin	
7,325,944	B2		2/2008	Kovacik et al.	
7,338,189	B2		3/2008	Kovacik et al.	
7,350,936	B2		4/2008	Ducharme et al.	
7,367,692	B2		5/2008	Maxik	
7,597,456	B2		10/2009	Catalano et al.	
7,600,882	B1		10/2009	Morejon et al.	
D631,178	S		1/2011	Kovacik et al.	
D648,054	S	*	11/2011	Zhuang	D26/37
D651,731	S	*	1/2012	Xu	D26/37
D689,230	S	*	9/2013	Yeh	D26/49
D691,310	S	*	10/2013	Zhou et al.	D26/37
D698,056	S	*	1/2014	Forbes et al.	D26/49
D698,471	S	*	1/2014	Poon	D26/37
D698,959	S	*	2/2014	Shen	D26/46
8,708,519	B2		4/2014	Kovacik et al.	
2006/0109662	A1		5/2006	Reiff et al.	
2007/0103914	A1		5/2007	McCaffrey	
2010/0008086	A1		1/2010	Broitzman	
2010/0053957	A1		3/2010	Pawelko et al.	

* cited by examiner

Primary Examiner — Ian Simmons
Assistant Examiner — Carissa C Fitts
(74) *Attorney, Agent, or Firm* — Fraser Clemens Martin & Miller LLC; William J. Clemens

(57) **CLAIM**

The ornamental design for the handheld work light, as shown and described.

DESCRIPTION

FIG. **1** is a front perspective view of a handheld work light showing our new design;
FIG. **2** is a front elevation view thereof;
FIG. **3** is a rear elevation view thereof;
FIG. **4** is a top plan view thereof;
FIG. **5** is a bottom plan view thereof;
FIG. **6** is a right side elevation view thereof; and,
FIG. **7** is a left side elevation view thereof.
The broken line showing is for environmental purposes only and forms no part of the claimed design.

1 Claim, 3 Drawing Sheets

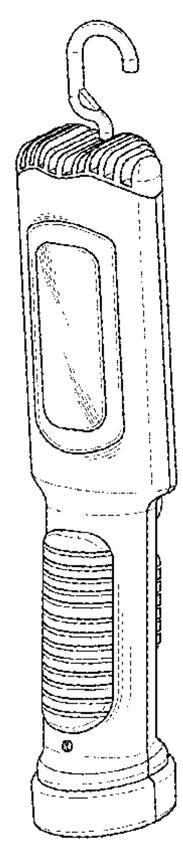

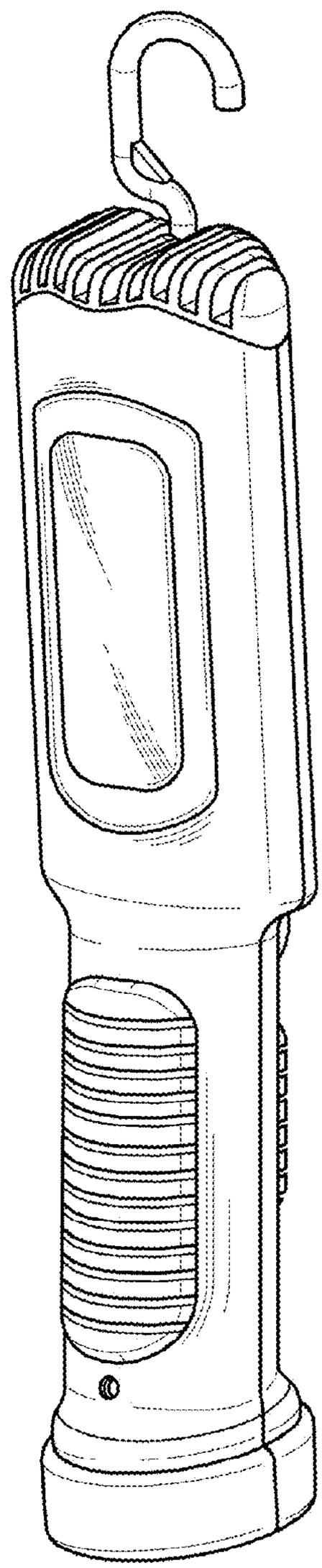

FIG. 1

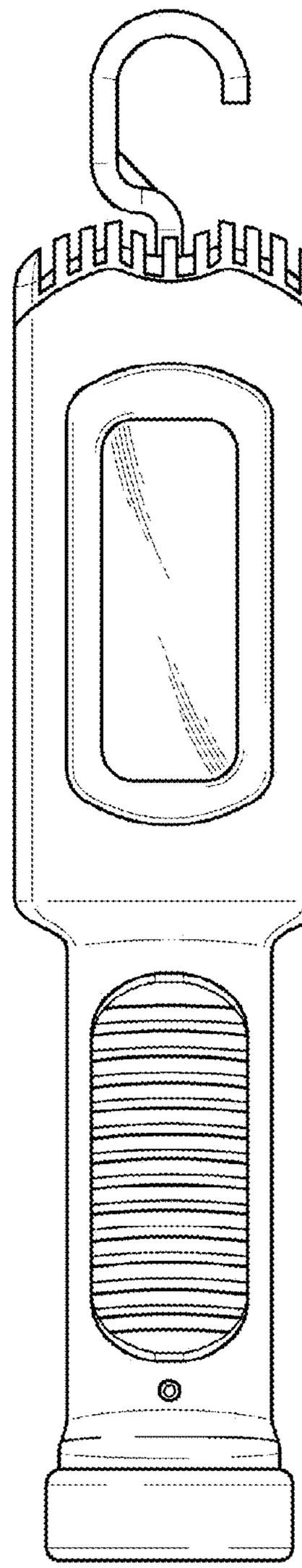

FIG. 2

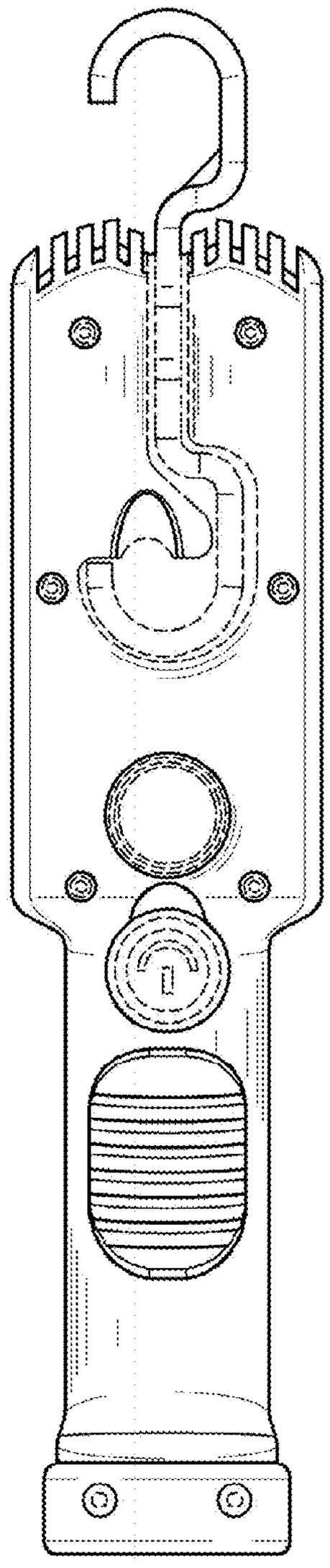

FIG. 3

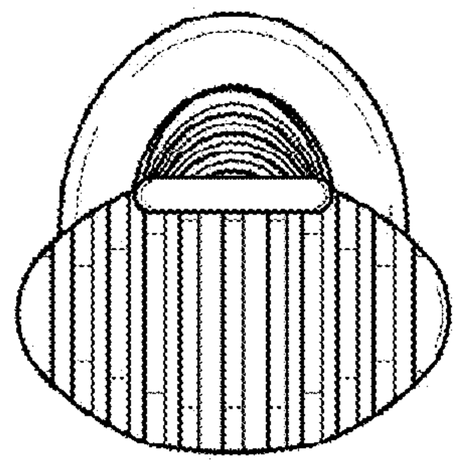

FIG. 4

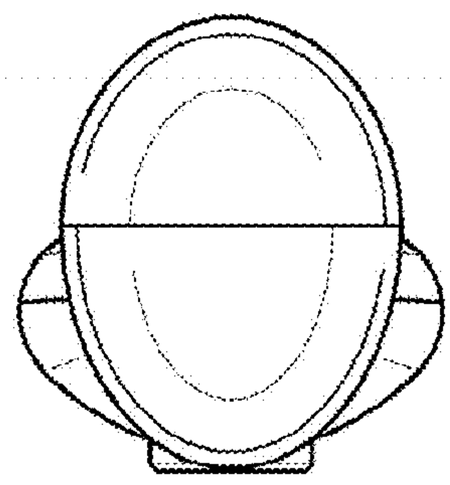

FIG. 5

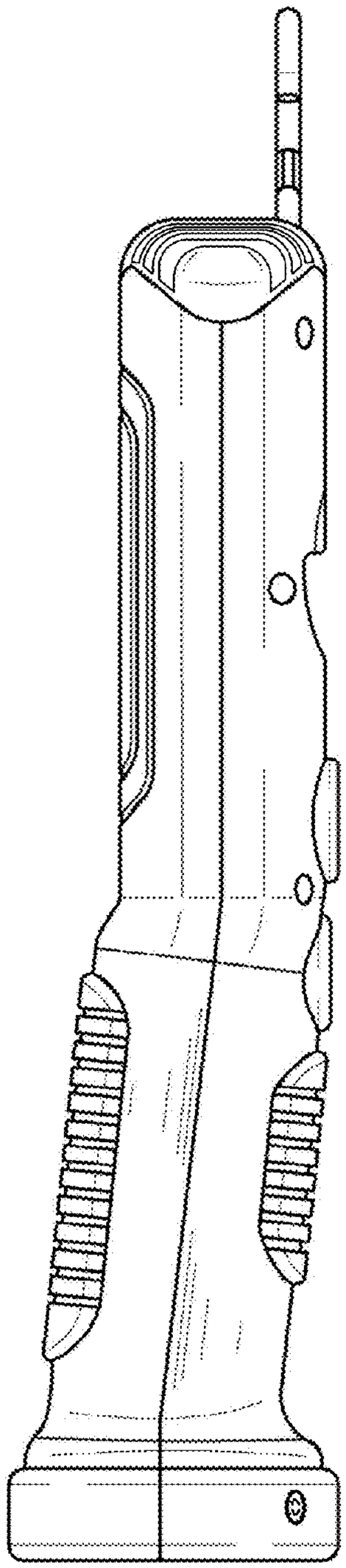

FIG. 6

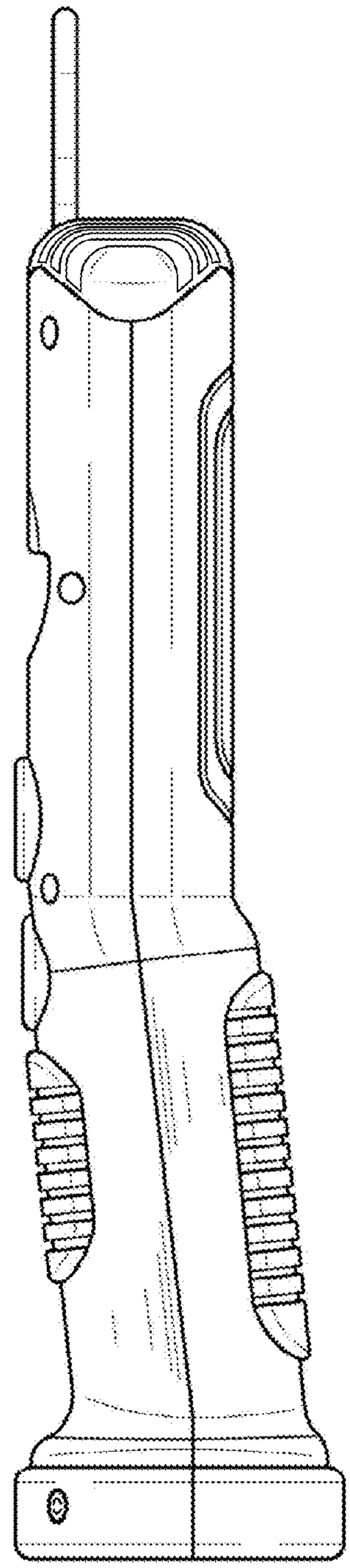

FIG. 7