US00D757161S

(12) United States Design Patent

Takahashi et al.

(10) Patent No.: US D757,161 S
(45) Date of Patent: ** May 24, 2016

(54) **TONER CONTAINER**

(71) Applicants: **Yasufumi Takahashi**, Tokyo (JP); **Kunihiro Ohyama**, Tokyo (JP)

(72) Inventors: **Yasufumi Takahashi**, Tokyo (JP); **Kunihiro Ohyama**, Tokyo (JP)

(73) Assignee: **RICOH COMPANY, LTD.**, Tokyo (JP)

(**) Term: **14 Years**

(21) Appl. No.: **29/506,045**

(22) Filed: **Oct. 13, 2014**

Related U.S. Application Data

(60) Continuation of application No. 13/856,918, filed on Apr. 4, 2013, now Pat. No. 8,909,071, which is a division of application No. 13/691,023, filed on Nov. 30, 2012, now Pat. No. 8,660,441, which is a

(Continued)

(30) **Foreign Application Priority Data**

Jun. 11, 2010	(JP)	2010-134560
Mar. 22, 2011	(JP)	2011-062216
Mar. 22, 2011	(JP)	2011-062283
Apr. 6, 2011	(JP)	2011-084820
Apr. 11, 2011	(JP)	2011-087786

(51) **LOC (10) Cl.** **16-03**

(52) **U.S. Cl.**
USPC **D18/43**

(58) **Field of Classification Search**
USPC D18/18, 40, 43, 56, 99
CPC G03G 15/0832; G03G 15/0834; G03G 15/0836; G03G 15/0837; G03G 15/0867; G03G 15/0868; G03G 15/0872; G03G 15/0877; G03G 15/0898; G03G 15/50; G03G 15/5016; G03G 15/60; G03G 15/65
See application file for complete search history.

(56) **References Cited**

U.S. PATENT DOCUMENTS

2,508,085	A	5/1950	Alford
2,617,033	A	11/1952	Posthumus

(Continued)

FOREIGN PATENT DOCUMENTS

EP	0 997 297	5/2000
EP	1 232 871 A1	8/2002

(Continued)

OTHER PUBLICATIONS

Office Action issued Mar. 31, 2015 in Japanese Patent Application No. 2011-220226.

(Continued)

Primary Examiner — Daniel Bui
Assistant Examiner — Khawaja Anwar
(74) *Attorney, Agent, or Firm* — Oblon, McClelland, Maier & Neustadt, L.L.P.

(57) **CLAIM**

The ornamental design for a toner container, as shown and described.

DESCRIPTION

FIG. **1** is a front, bottom, and left side perspective view of a toner container, showing our new design;
FIG. **2** is a front, top, and right side perspective view thereof;
FIG. **3** is a front, top, and right side perspective view thereof in a use condition;
FIG. **4** is a front, bottom, and right side perspective view thereof in a use condition; and,
FIG. **5** is a bottom plan view thereof in a use condition.
The broken lines in the drawings depict environmental subject matter only and form no part of the claimed design. To the extent that any portion of the toner cartridge is not shown in FIGS. **1-5**, such a portion is hereby disclaimed.

1 Claim, 5 Drawing Sheets

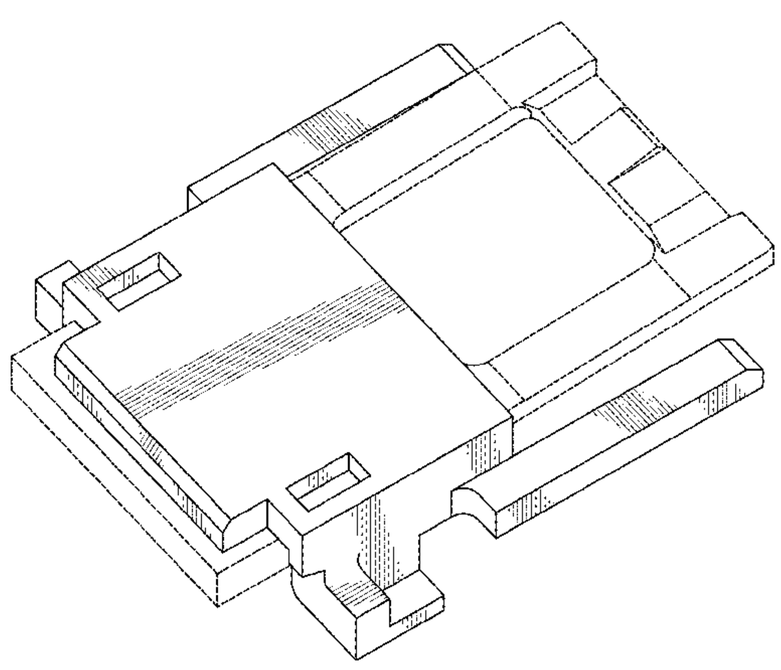

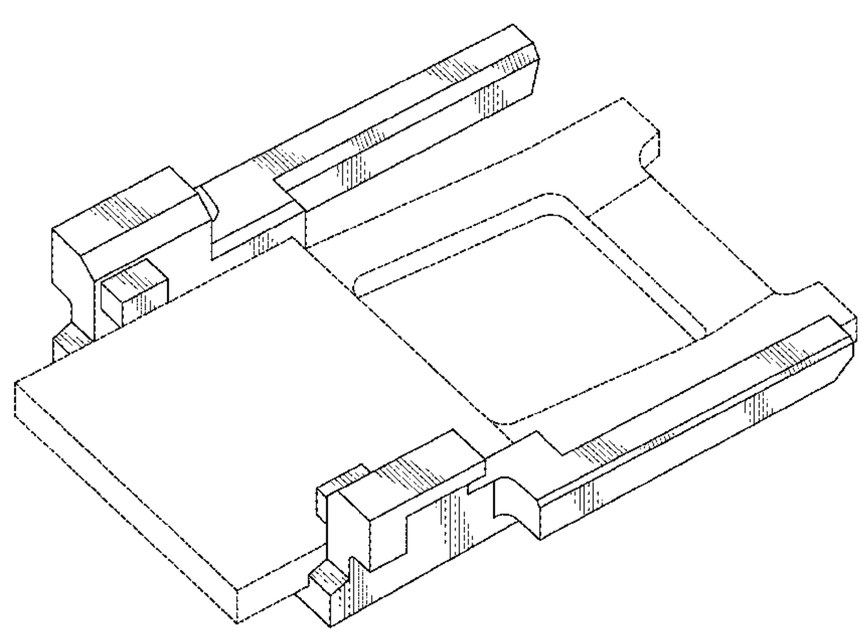

Related U.S. Application Data

continuation of application No. 13/448,987, filed on Apr. 17, 2012, now Pat. No. 8,346,105, which is a continuation of application No. PCT/JP2011/063993, filed on Jun. 13, 2011.

(56) **References Cited**

U.S. PATENT DOCUMENTS

3,732,514 A 5/1973 Sato
3,785,046 A 1/1974 Jennings
3,798,059 A 3/1974 Astle et al.
3,832,661 A 8/1974 Sato
3,956,751 A 5/1976 Herman
4,063,176 A 12/1977 Milligan et al.
4,063,246 A 12/1977 Greiser
4,084,778 A 4/1978 Dominguez
4,193,048 A 3/1980 Nyhus
4,322,698 A 3/1982 Takahashi et al.
4,518,965 A 5/1985 Hidaka
D283,032 S 3/1986 Quesnel
4,616,205 A 10/1986 Praught et al.
4,731,297 A 3/1988 Takaya
4,769,625 A 9/1988 Meindl
4,857,869 A 8/1989 Terakawa et al.
D305,887 S 2/1990 Nishimura
4,992,769 A 2/1991 Oppelt et al.
5,005,019 A 4/1991 Zaghloul et al.
5,061,910 A 10/1991 Bouny
5,061,943 A 10/1991 Rammos
D324,990 S 3/1992 Gary
5,155,663 A 10/1992 Harase
5,179,365 A 1/1993 Raggi
5,345,670 A 9/1994 Pitzele et al.
5,349,743 A 9/1994 Grader et al.
5,359,313 A 10/1994 Watanabe et al.
5,404,118 A 4/1995 Okamura et al.
D359,756 S 6/1995 Ely
5,479,146 A 12/1995 Herbert
5,521,573 A 5/1996 Inoh et al.
5,559,487 A 9/1996 Butcher et al.
D374,739 S 10/1996 Blanton
5,572,180 A 11/1996 Huang et al.
D379,006 S 4/1997 Gaumet
5,631,822 A 5/1997 Silberkleit et al.
D385,545 S 10/1997 Levin
D395,923 S 7/1998 Ely
5,777,539 A 7/1998 Folker et al.
5,805,219 A 9/1998 Ejima et al.
5,844,461 A 12/1998 Faulk et al.
D410,968 S 6/1999 Swan et al.
5,917,386 A 6/1999 Dobrovolny
5,944,563 A 8/1999 Nagafuji
5,950,047 A 9/1999 Miyabe et al.
5,973,644 A 10/1999 Haneishi et al.
5,988,510 A 11/1999 Tuttle et al.
5,988,801 A 11/1999 Coiner
5,990,776 A 11/1999 Jitaru
6,046,662 A 4/2000 Schroter et al.
D423,774 S 5/2000 Peterson
6,060,974 A 5/2000 Schroter et al.
6,097,345 A 8/2000 Walton
6,114,932 A 9/2000 Wester et al.
D434,418 S 11/2000 Shinada
6,154,111 A 11/2000 Rehm et al.
6,167,219 A 12/2000 Miyamoto et al.
6,208,528 B1 3/2001 Soto et al.
6,216,883 B1 4/2001 Kobayashi et al.
6,239,683 B1 5/2001 Roessler et al.
D444,706 S 7/2001 Giancaspro
6,329,950 B1 12/2001 Harrell et al.
6,339,385 B1 1/2002 Tuttle
6,346,919 B1 2/2002 Wang et al.
6,380,834 B1 4/2002 Canzano et al.
D456,603 S 5/2002 Phetthaweebancha
6,386,913 B1 5/2002 Mohammad et al.
6,409,453 B1 6/2002 Brodine et al.
6,420,953 B1 7/2002 Dadafshar
6,429,763 B1 8/2002 Patel et al.
6,445,272 B1 9/2002 Mercado et al.
6,497,477 B1 12/2002 Nakamura et al.
6,502,917 B1 1/2003 Shinada et al.
D473,238 S 4/2003 Cockerill
6,557,967 B1 5/2003 Lee
6,628,531 B2 9/2003 Dadafshar
6,654,568 B2 11/2003 Matsuguma
6,655,768 B1 12/2003 Takagi
6,665,508 B2 12/2003 Sudo et al.
6,675,005 B2 1/2004 Dobrovolny
6,710,689 B2 3/2004 Wohlfarth
6,713,399 B1 3/2004 Kao
D489,695 S 5/2004 Komoto
6,765,469 B2 7/2004 Sortor
D498,357 S 11/2004 Smith
6,826,380 B2 11/2004 Karakama et al.
6,863,387 B2 3/2005 Thielman et al.
6,879,235 B2 4/2005 Ichikawa
D505,416 S 5/2005 Ma
6,917,254 B2 7/2005 Kaehs
6,991,419 B2 1/2006 Kim
6,992,630 B2 1/2006 Parsche
D517,373 S 3/2006 Cappellino et al.
7,018,017 B2 3/2006 Song et al.
7,072,636 B2 7/2006 Dobrovolny
7,079,080 B2 7/2006 Mizuno et al.
7,082,276 B2 7/2006 Karakama et al.
7,098,856 B2 8/2006 Okado
D529,000 S 9/2006 Ishii
7,101,021 B2 9/2006 Aruga
7,102,572 B2 9/2006 Okado
D534,134 S 12/2006 Lai
7,148,850 B2 12/2006 Puente Baliarda et al.
7,186,297 B2 3/2007 Asano
7,212,750 B2 5/2007 Kawai
7,218,866 B2 5/2007 Hayashi et al.
D543,976 S 6/2007 Oliver
D547,306 S 7/2007 Oliver
7,256,676 B2 8/2007 Poynton
7,277,664 B2 10/2007 Katsuyama et al.
7,332,993 B1 2/2008 Nussbaum
7,375,737 B2 5/2008 Botten et al.
7,425,151 B2 9/2008 Baba et al.
7,433,622 B2 10/2008 Chadani et al.
7,439,838 B2 10/2008 Chen et al.
7,439,839 B2 10/2008 Podlisk et al.
7,447,469 B2 11/2008 Uchiyama et al.
7,471,246 B2 12/2008 Soler Castany et al.
D589,474 S 3/2009 Ogasawara et al.
7,510,251 B2 3/2009 Wanibe et al.
D589,912 S 4/2009 Ogasawara et al.
D591,336 S * 4/2009 Kurenuma D18/43
7,522,054 B2 4/2009 Takei
D591,733 S 5/2009 Karakama
D591,734 S 5/2009 Karakama
D592,162 S 5/2009 Sugimoto et al.
D592,615 S 5/2009 Imai et al.
7,562,958 B2 7/2009 Asauchi
D599,307 S 9/2009 Blumberg et al.
D599,308 S 9/2009 Blumberg et al.
D602,519 S * 10/2009 Kurenuma D18/43
7,598,837 B2 10/2009 Gilmartin et al.
D603,812 S 11/2009 Johnson et al.
7,653,990 B2 2/2010 Lee et al.
7,656,247 B2 2/2010 Kaehs
7,659,468 B1 2/2010 Gottlieb
7,706,699 B2 4/2010 Taguchi et al.
7,720,417 B2 5/2010 Taguchi et al.
7,742,717 B2 6/2010 Kim
D621,803 S 8/2010 Maruyama et al.
7,822,371 B2 10/2010 Taguchi et al.
D626,404 S 11/2010 Koehn
D628,170 S 11/2010 Maruyama et al.
7,840,154 B2 11/2010 Ishii et al.
7,860,427 B2 12/2010 Hayashi et al.
7,885,554 B2 2/2011 Shirokoshi et al.

(56) **References Cited**

U.S. PATENT DOCUMENTS

D636,813	S *	4/2011	Kikuchi	D18/43
7,945,184	B2	5/2011	Takagi	
7,953,339	B2	5/2011	Fukamachi et al.	
D640,645	S	6/2011	Andrews et al.	
7,971,792	B2	7/2011	Seriu et al.	
7,982,576	B2	7/2011	Feng et al.	
D643,708	S	8/2011	Hecht	
D652,409	S	1/2012	Hernandez et al.	
8,089,331	B2	1/2012	Jacobson et al.	
D656,147	S	3/2012	Schlossstein	
D656,909	S	4/2012	Taniguchi et al.	
D656,910	S	4/2012	Taniguchi et al.	
D659,684	S	5/2012	Karakama et al.	
D664,511	S	7/2012	Taniguchi et al.	
D664,512	S	7/2012	Taniguchi et al.	
8,213,842	B2	7/2012	Usui	
D667,047	S *	9/2012	Oshikawa	D18/43
D667,048	S *	9/2012	Oshikawa	D18/43
8,299,869	B2	10/2012	Laporte et al.	
D671,511	S	11/2012	Amano et al.	
8,311,447	B2	11/2012	Mitsuishi et al.	
D673,141	S	12/2012	Lolli	
D674,365	S	1/2013	Kajiwara	
D675,582	S	2/2013	Segler et al.	
D678,227	S	3/2013	Takahashi et al.	
8,390,657	B2	3/2013	Nagumo	
8,396,398	B2	3/2013	Taguchi et al.	
D682,042	S	5/2013	Sanders	
D683,391	S *	5/2013	Takahashi	D18/43
8,448,874	B2	5/2013	Koskelainen	
D686,666	S	7/2013	Lee et al.	
8,532,542	B2	9/2013	Mitsuishi et al.	
D695,240	S	12/2013	Iida et al.	
D701,498	S	3/2014	Iida et al.	
D704,171	S	5/2014	Forster	
D706,246	S	6/2014	Forster	
8,743,007	B2	6/2014	Kaneko et al.	
8,789,762	B2	7/2014	Finn et al.	
D720,359	S	12/2014	Bauermeister	
8,928,449	B2	1/2015	Silva et al.	
8,941,457	B2	1/2015	Yan et al.	
8,988,179	B2	3/2015	Kim et al.	
8,991,712	B2	3/2015	Finn et al.	
D727,928	S	4/2015	Allison et al.	
D730,329	S	5/2015	Man	
9,054,094	B2	6/2015	Anthony et al.	
2001/0051088	A1	12/2001	Park et al.	
2002/0067315	A1	6/2002	Kunysz	
2002/0071399	A1	6/2002	Smith	
2003/0170042	A1	9/2003	Okamoto et al.	
2003/0179067	A1	9/2003	Gamou et al.	
2004/0070914	A1	4/2004	Ferreres	
2004/0075616	A1	4/2004	Endo et al.	
2004/0079957	A1	4/2004	Andrews et al.	
2004/0100523	A1	5/2004	Silverbrook et al.	
2004/0238416	A1	12/2004	Burbank et al.	
2006/0133831	A1	6/2006	Rommelmann et al.	
2006/0170557	A1	8/2006	Berson	
2007/0081033	A1	4/2007	Silverbrook	
2007/0081036	A1	4/2007	Silverbrook	
2007/0086809	A1	4/2007	Yamane	
2007/0122205	A1	5/2007	Taguchi et al.	
2007/0132077	A1	6/2007	Choi et al.	
2007/0229368	A1	10/2007	Hata et al.	
2007/0230999	A1	10/2007	Shimomura	
2007/0268335	A1	11/2007	Silverbrook	
2008/0001160	A1	1/2008	Andrews	
2008/0024241	A1	1/2008	Hata et al.	
2008/0054286	A1	3/2008	Loh et al.	
2008/0102674	A1	5/2008	Dawson et al.	
2009/0040276	A1	2/2009	North et al.	
2010/0008693	A1	1/2010	Hayashi et al.	
2010/0060687	A1	3/2010	Kim	
2010/0201748	A1	8/2010	Kishikawa et al.	
2010/0226690	A1	9/2010	Kadota et al.	
2012/0096383	A1	4/2012	Sakamoto et al.	
2012/0113197	A1	5/2012	Kashu et al.	
2013/0050342	A1	2/2013	Price	
2013/0330106	A1	12/2013	Mitsuishi et al.	
2014/0139584	A1	5/2014	Chen et al.	
2014/0218437	A1	8/2014	Ciampini et al.	
2014/0232792	A1	8/2014	Munakata	
2014/0240404	A1	8/2014	Li et al.	
2014/0340450	A1	11/2014	Kunnavakkam et al.	
2014/0354735	A1	12/2014	Robinson et al.	
2015/0049141	A1	2/2015	Taff et al.	

FOREIGN PATENT DOCUMENTS

EP	1363168		11/2003
EP	1 892 102	A2	2/2008
EP	2 037 327		3/2009
JP	62-80672		5/1987
JP	3-57074		5/1991
JP	3-60774	U	6/1991
JP	4-30784	U	3/1992
JP	8-221525		8/1996
JP	09-280288	A	10/1997
JP	10-49032		2/1998
JP	11-348375		12/1999
JP	2002-196629		7/2002
JP	2003-11389	A	1/2003
JP	2003-330335		11/2003
JP	2004-61596		2/2004
JP	2006-58743	A	3/2006
JP	2006-65267		3/2006
JP	2006-119467		5/2006
JP	2006-145960		6/2006
JP	2006-184850		7/2006
JP	2006-209060		8/2006
JP	2006-267992		10/2006
JP	2007-10774		1/2007
JP	2007-047392	A	2/2007
JP	2007-47397		2/2007
JP	2007-199505	A	8/2007
JP	2008-020605	A	1/2008
JP	2008-185825	A	8/2008
JP	2008-224966	A	9/2008
JP	2008-257124		10/2008
JP	2009-054627	A	3/2009
JP	2009-69417		4/2009
JP	2009-294477	A	12/2009
JP	2010-020219	A	1/2010
JP	2010-026501	A	2/2010
JP	2010 033991		2/2010
JP	2010-66638		3/2010
JP	2010-94924		4/2010
WO	EP 1 936 631	A1	6/2008
WO	WO 2009/052702		4/2009

OTHER PUBLICATIONS

Office Action issued Jun. 23, 2015 in Japanese Patent Application No. 2015-100338.

Notice of Allowance issued Jul. 22, 2015 in co-pending U.S. Appl. No. 29/501,858.

Office Action issued Aug. 19, 2014 in Japanese Patent Application No. 2011-220226.

U.S. Office Action issued Aug. 18, 2014 in U.S. Appl. No. 14/298,601.

Extended European Search Report dated Aug. 12, 2014 in European Patent Application EP 1 416 2692 (in English).

Office Action mailed Sep. 6, 2011, in Japanese Patent Application No. 2011-121688 (with English-language translation).

Decision of a Patent Grant mailed Nov. 29, 2011, in Japanese Patent Application No. 2011-121688 (with English-language translation).

Decision of a Patent Grant mailed Sep. 6, 2011, in Japanese Patent Application No. 2011-121692 (with English-language translation).

Written Opinion of the International Searching Authority mailed Aug. 23, 2011, in PCT/JP2011/063993.

Extended Search Report mailed Jan. 23, 2013, in European Patent Application No. 11792592.5.

(56) **References Cited**

OTHER PUBLICATIONS

Official Decision on Grant in Russian Patent Application No. 201113860 dated Jul. 26, 2013 with English translation.
Office Action issued Aug. 29, 2014 in Korean Patent Application No. 10-2012-7012751.
Office Action issued Jul. 28, 2014 in Taiwanese Patent Application No. 100120554 (with English Translation)
Office Action issued Sep. 25, 2014 in co-pending U.S. Appl. No. 14/447,241.
U.S. Notice of Allowance mailed Sep. 24, 2015, corresponding U.S. Appl. No. 14/322,754.
Office Action mailed Oct. 10, 2014 in co-pending U.S. Appl. No. 14/047,755.
Office Action mailed Dec. 5, 2014 in co-pending U.S. Appl. No. 14/322,754.
Office Action issued Feb. 17, 2015 in Canadian Patent Application No. 2,782,610.
"Universal Serial Bus Specification" Compaq Computer Corporation, Revision 1.1, Sep. 1998, 327 pages.
Japanese Office Action issued in Japanese Application No. 2011-264251; Date Mailed: Sep. 29, 2015, pp. 2.
Extended European Search Report issued Dec. 15, 2015, in corresponding EP Application no. 15184363.8-1560.
Office Action issued Jan. 21 2016, in Singapore Application No. 10201504616T.
Office Action (8 pages) issued Feb. 5, 2016 by the Korean Intellectual Property Office (KIPO) in Korean Application No. 10-2014-7024545, with English translation (7 pages).

* cited by examiner

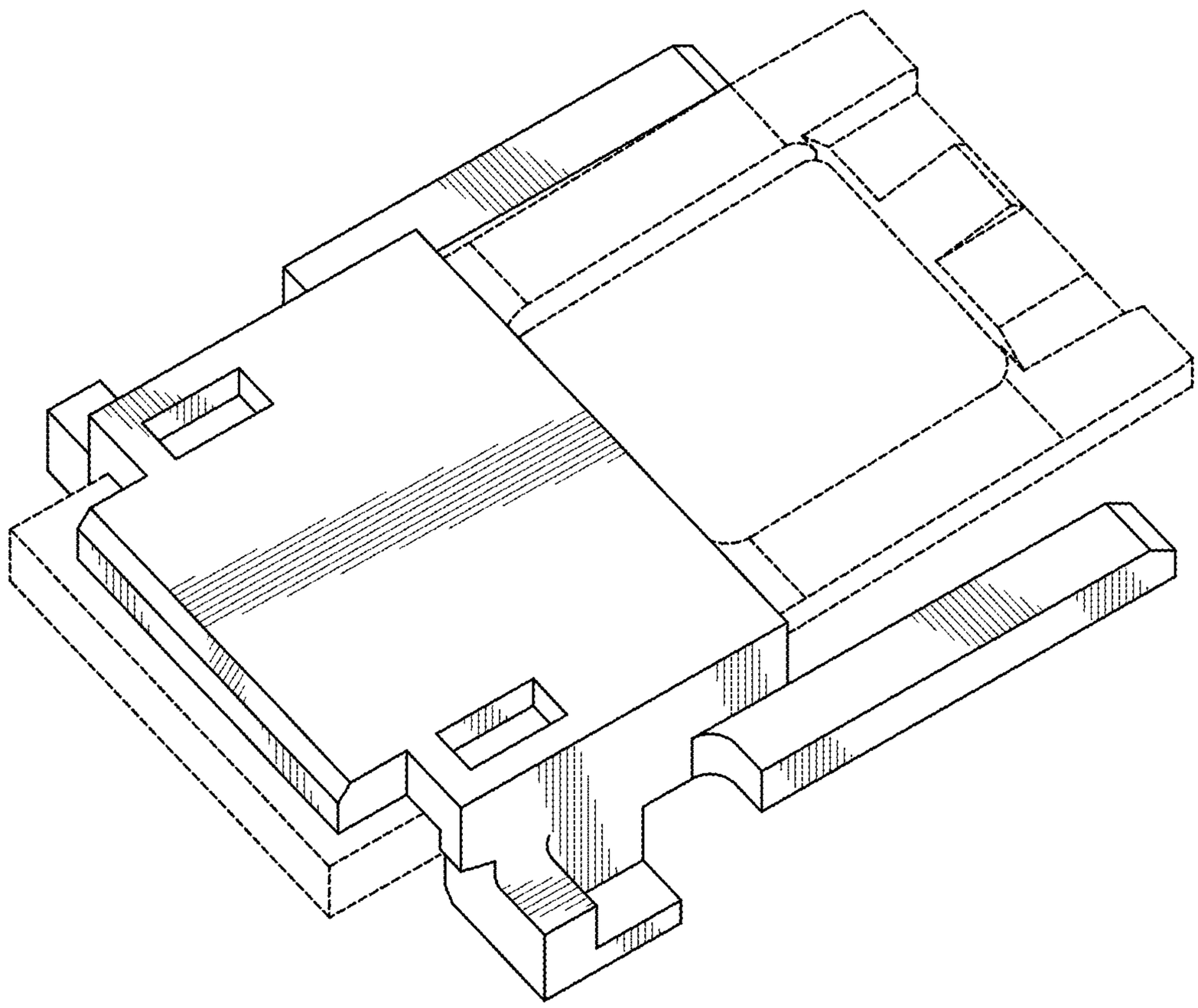

Fig. 1

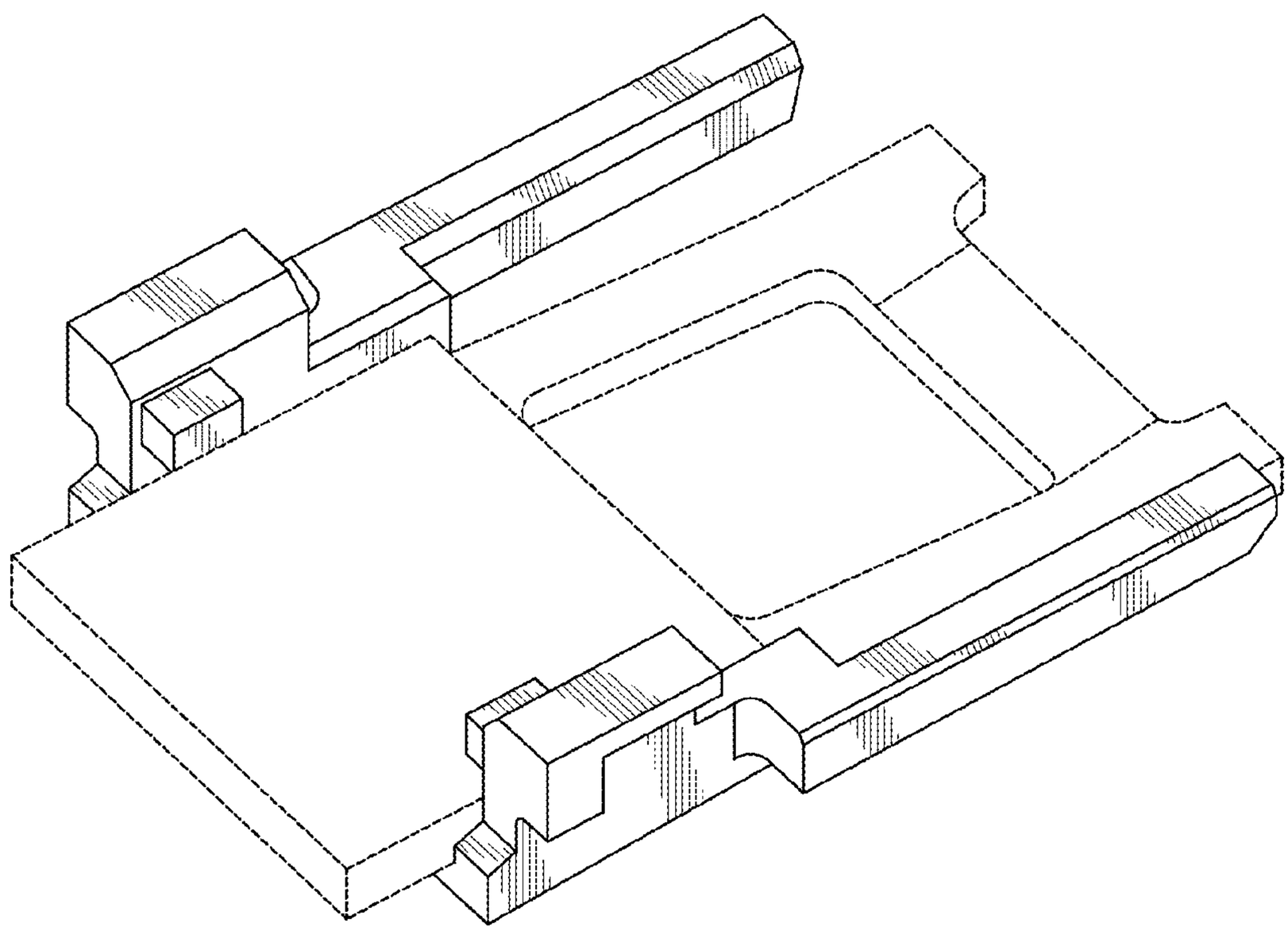

Fig. 2

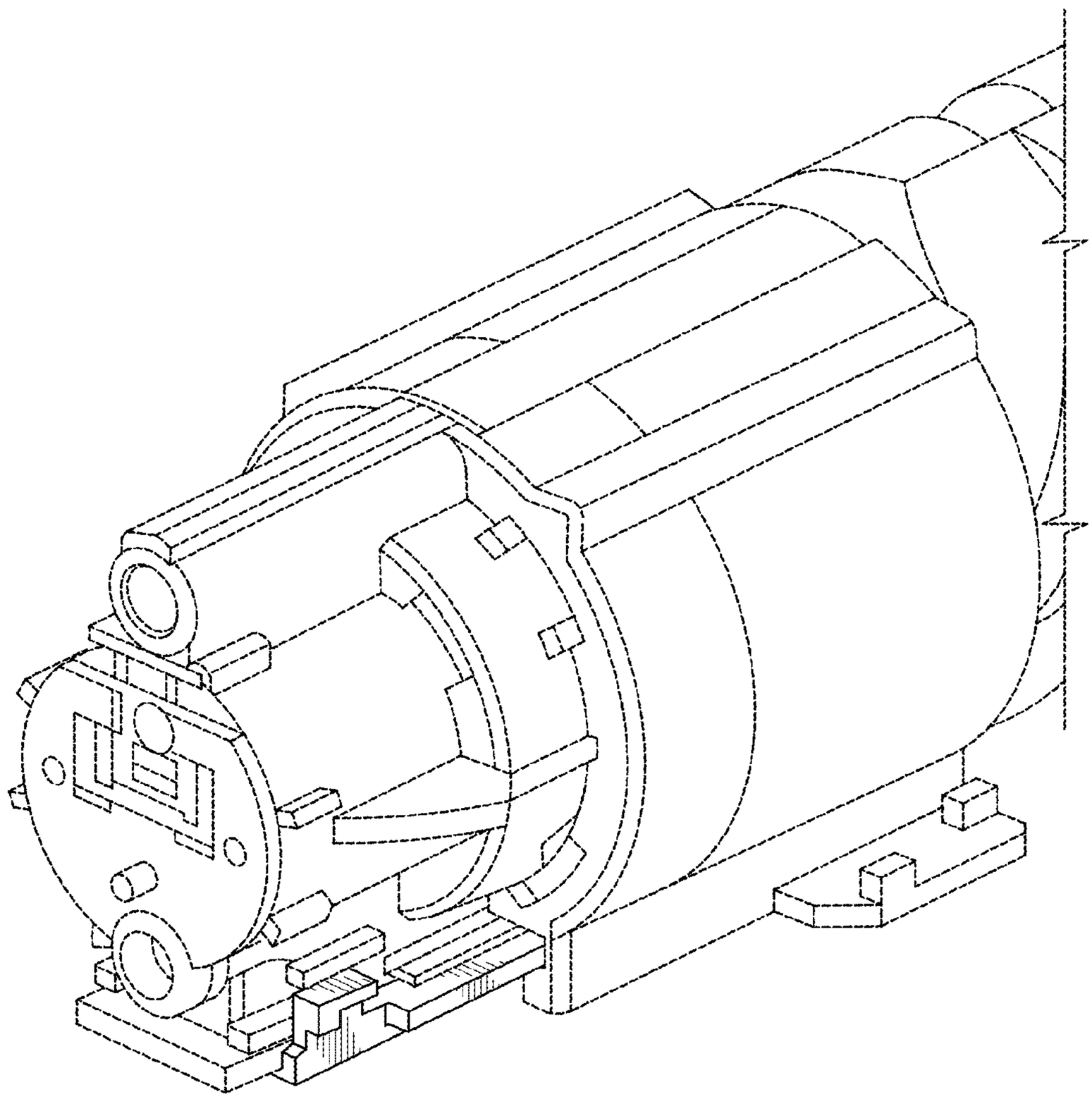

Fig. 3

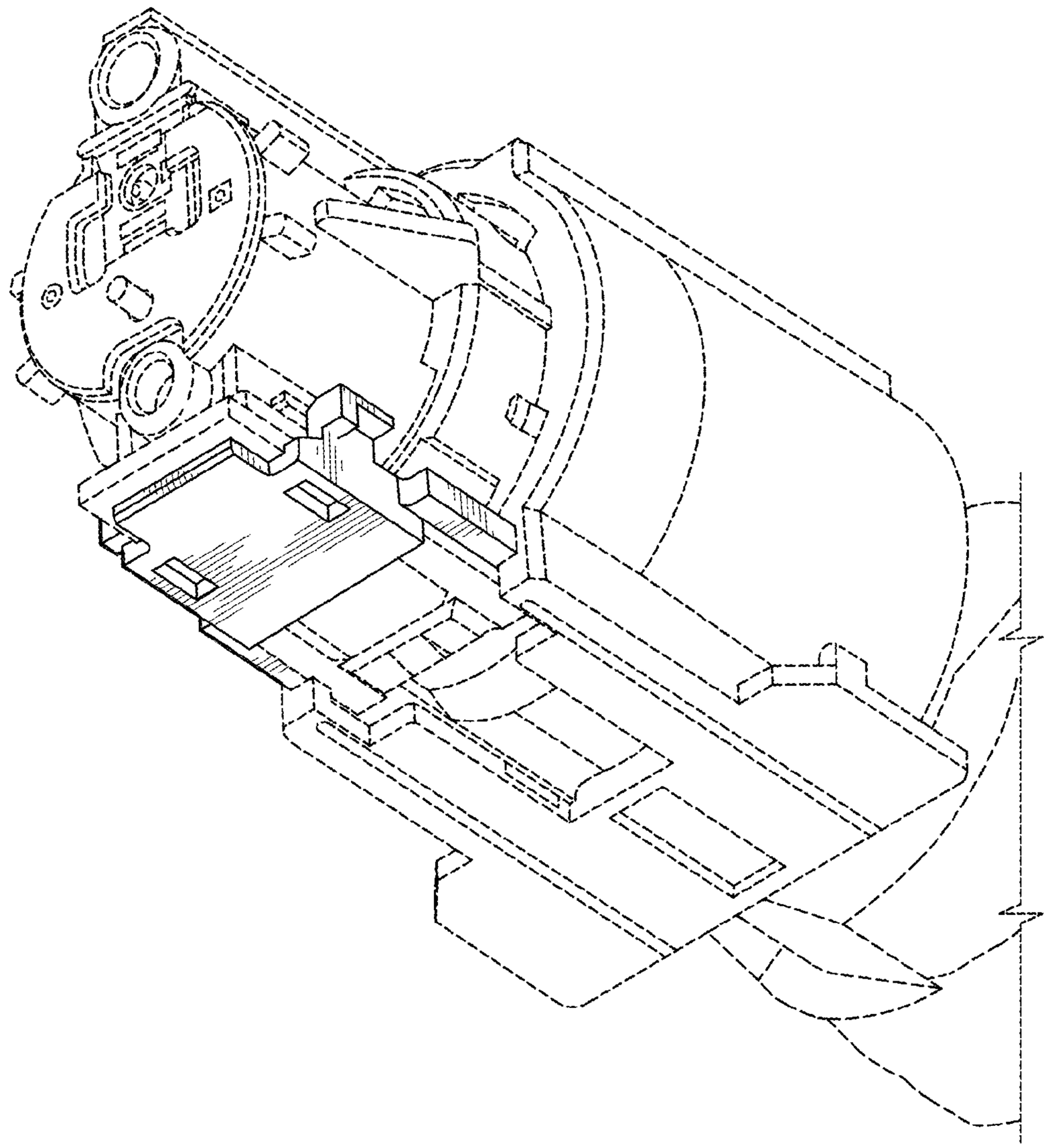

Fig. 4

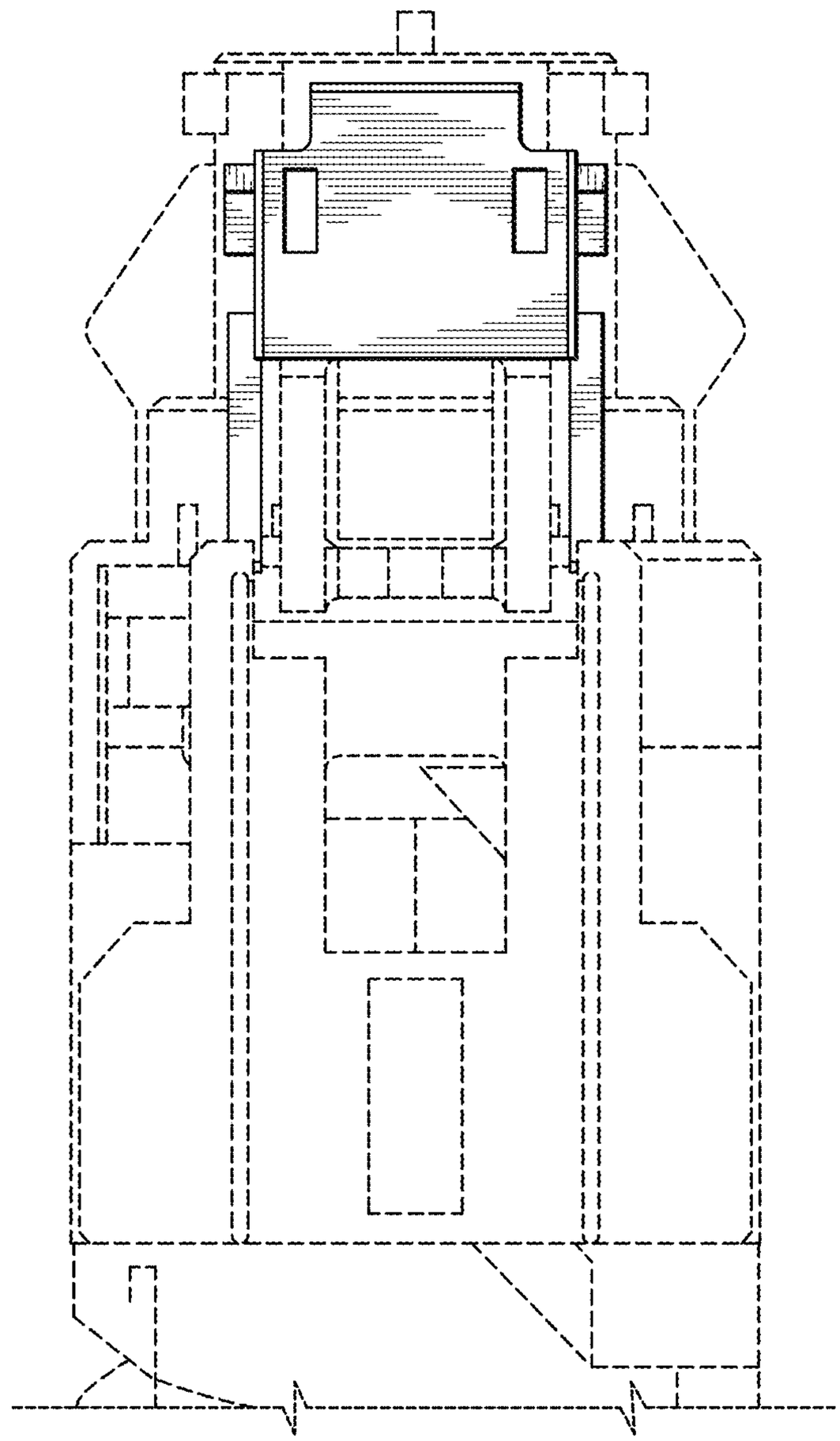

Fig. 5