US00D756057S

(12) United States Design Patent

Nessler et al.

(10) Patent No.: US D756,057 S
(45) Date of Patent: ** May 10, 2016

(54) **REACHSTACKER**

(71) Applicant: **Liebherr-Werk Nenzing GmbH**, Nenzing (AT)

(72) Inventors: **Wolfgang Nessler**, Ausserbraz (AT); **Jens Woide**, Nenzing (AT); **Walter Mietschnig**, Brand (AT)

(73) Assignee: **Liebherr-Werk Nenzing GmbH**, Nenzing (AT)

(**) Term: **14 Years**

(21) Appl. No.: **29/519,395**

(22) Filed: **Mar. 4, 2015**

(30) **Foreign Application Priority Data**

Sep. 4, 2014 (EP) 2 530 840

(51) **LOC (10) Cl.** **12-05**

(52) **U.S. Cl.**
USPC **D34/34**; D15/23

(58) **Field of Classification Search**
USPC D34/34, 31, 28; D15/10, 22, 23, 30, 31, D15/32, 33; 414/285; 180/89.12, 89.13, 180/89.17; 187/222, 237, 238
CPC E02F 3/286; E02F 9/0808; E02F 9/0833; E02F 9/123; E02F 9/02; B66F 9/0655; B66F 9/065; B66F 9/07545; B66F 9/07559; B66F 9/122; B66F 9/12; B66F 5/00
See application file for complete search history.

(56) **References Cited**

U.S. PATENT DOCUMENTS

D231,975 S * 7/1974 Aiello et al. D34/34
3,858,675 A * 1/1975 Geis B60W 30/18 180/306
3,985,248 A * 10/1976 Liegel B66F 9/0655 212/264
RE30,021 E * 6/1979 Olson B66F 9/0655 212/231
4,325,464 A * 4/1982 Larsson B66F 9/082 187/227
4,553,899 A * 11/1985 Magni B66F 9/0655 414/629
4,674,944 A * 6/1987 Addleman B66F 9/0655 414/706
D316,468 S * 4/1991 Sandrock D15/23
D332,856 S * 1/1993 Krayem D34/28
5,199,861 A * 4/1993 Merlo B66F 9/0655 180/89.12
D366,489 S * 1/1996 Brown D15/22
D376,243 S * 12/1996 Magni D34/34
D438,359 S * 2/2001 Braud D15/23
D480,529 S * 10/2003 Pini D34/34
6,699,002 B2 * 3/2004 Kinoshita B66F 9/0655 280/764.1
7,383,906 B2 * 6/2008 Sewell B66F 9/0655 180/89.12
D668,271 S * 10/2012 Hutchinson D15/22

* cited by examiner

Primary Examiner — Mark Goodwin
(74) *Attorney, Agent, or Firm* — Alleman Hall McCoy Russell & Tuttle LLP

(57) **CLAIM**

The ornamental design for a reachstacker, as shown and described.

DESCRIPTION

FIG. **1** is a front view of a design for a reachstacker according to the present disclosure.
FIG. **2** is a back view of the reachstacker of FIG. **1**.
FIG. **3** is a right view of the reachstacker of FIG. **1**.
FIG. **4** is a left view of the reachstacker of FIG. **1**.
FIG. **5** is a top view of the reachstacker of FIG. **1**.
FIG. **6** is a front perspective view of the reachstacker of FIG. **1**; and,
FIG. **7** is a back perspective view of the reachstacker of FIG. **1**.
The solid lines in FIGS. **1-7** illustrate a reachstacker according to the present disclosure.
A bottom view is not shown because there are no claimed features on the bottom view other than those features included in the views provided.

1 Claim, 7 Drawing Sheets

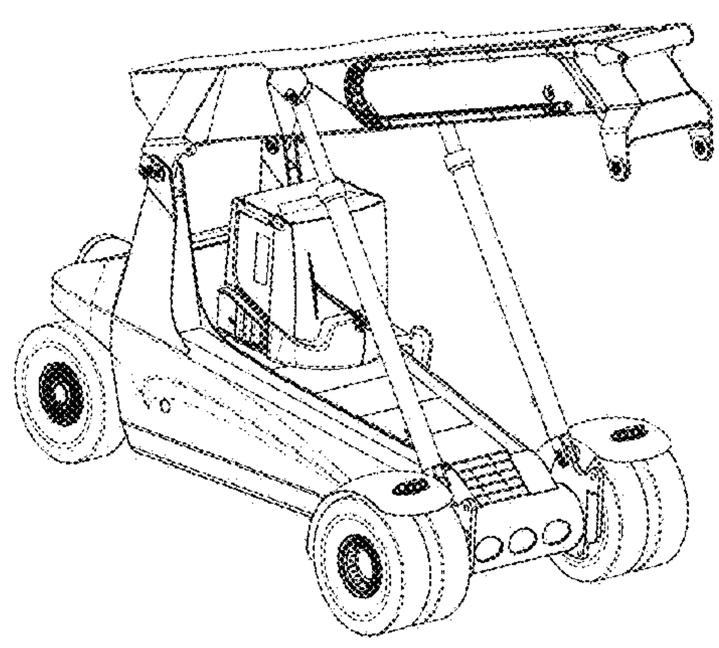

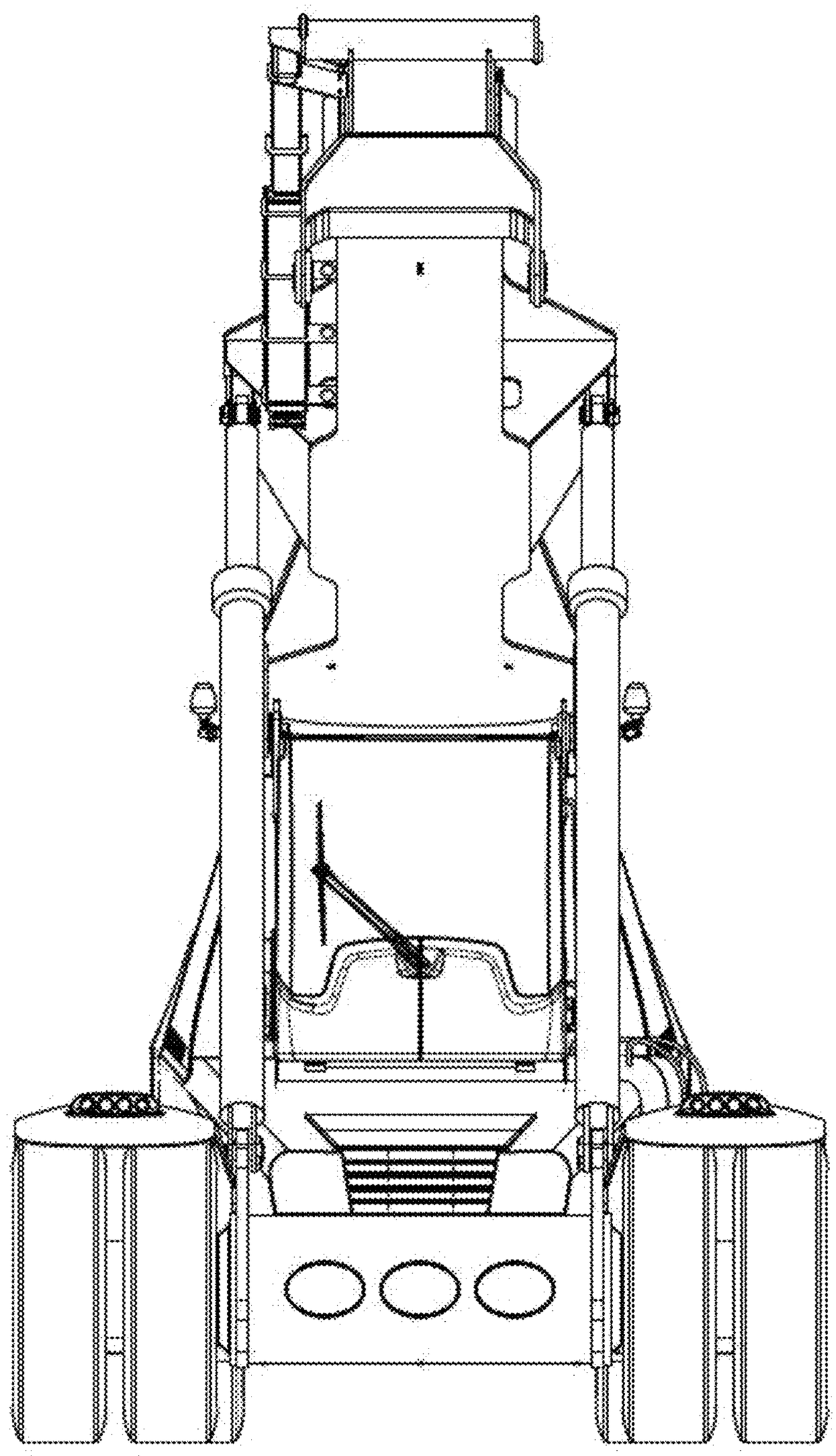

FIG. 1

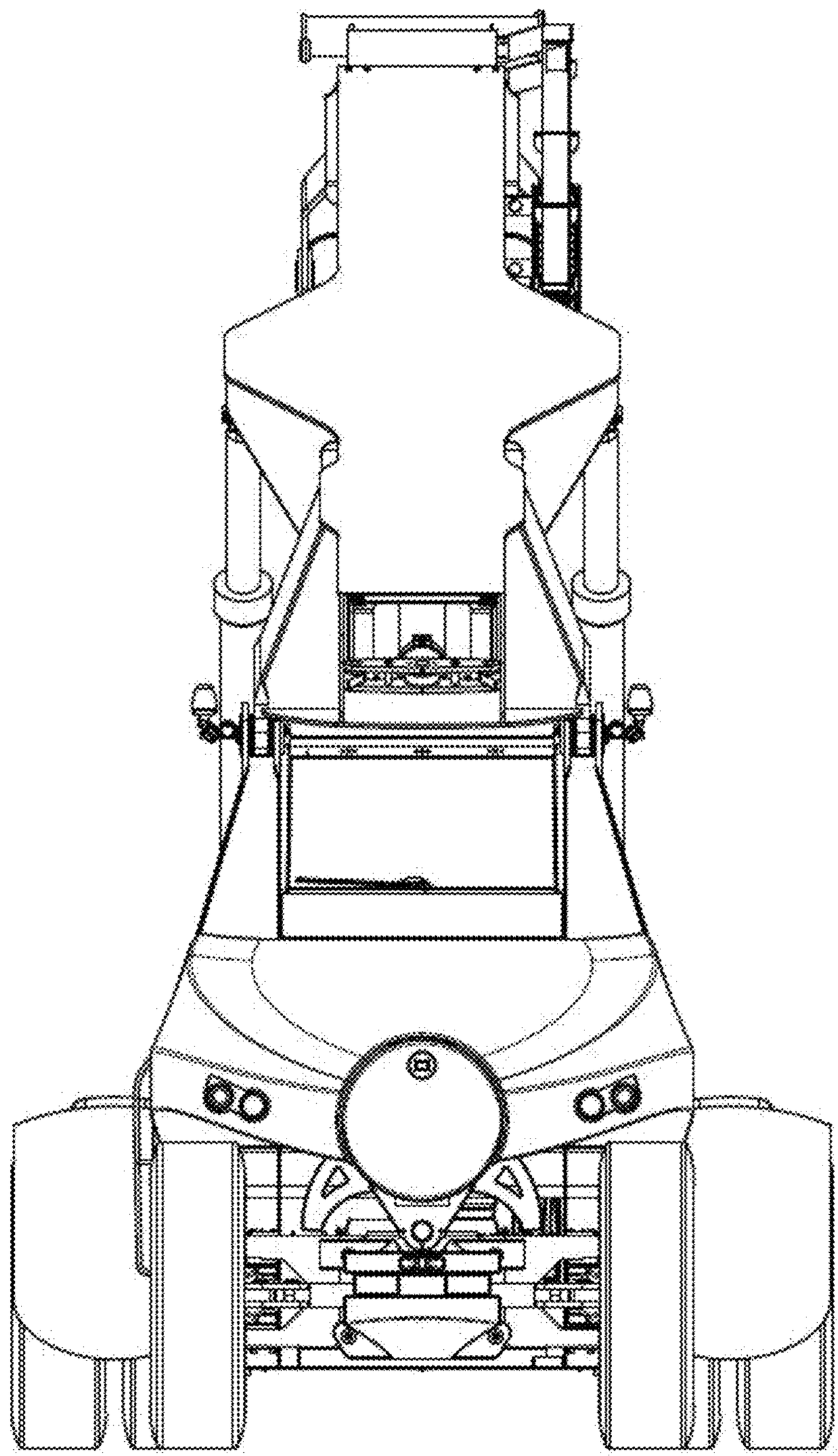

FIG. 2

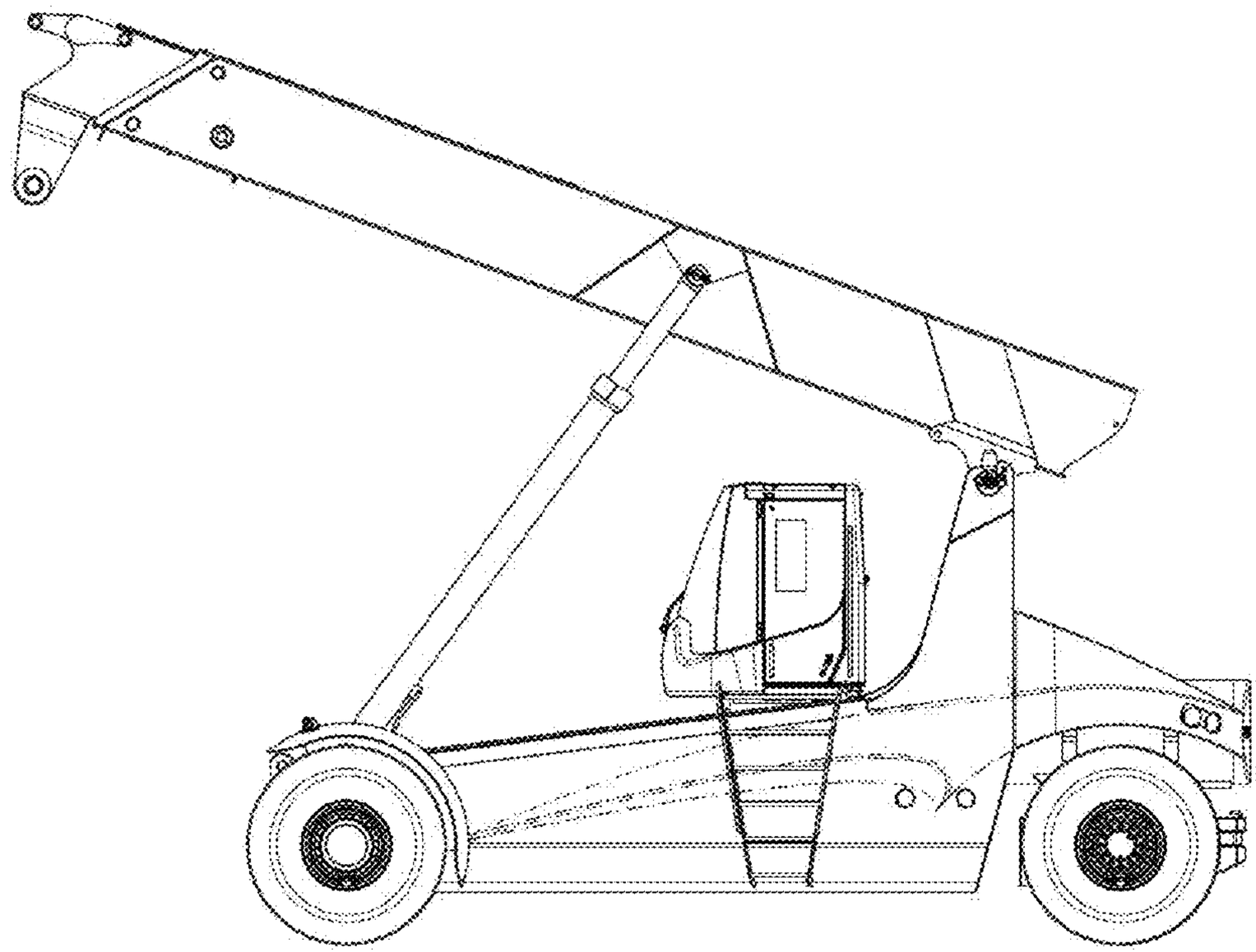

FIG. 3

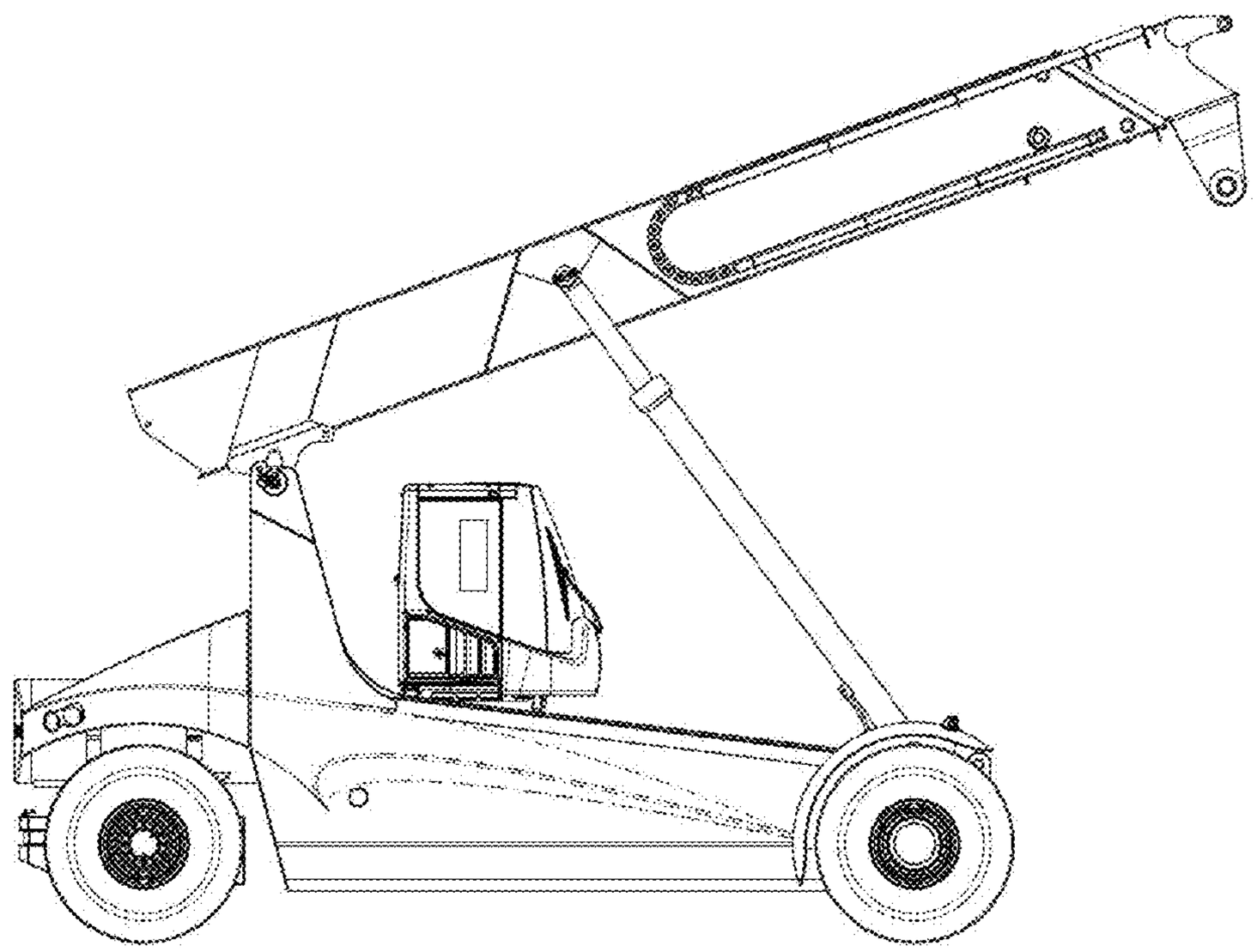

FIG. 4

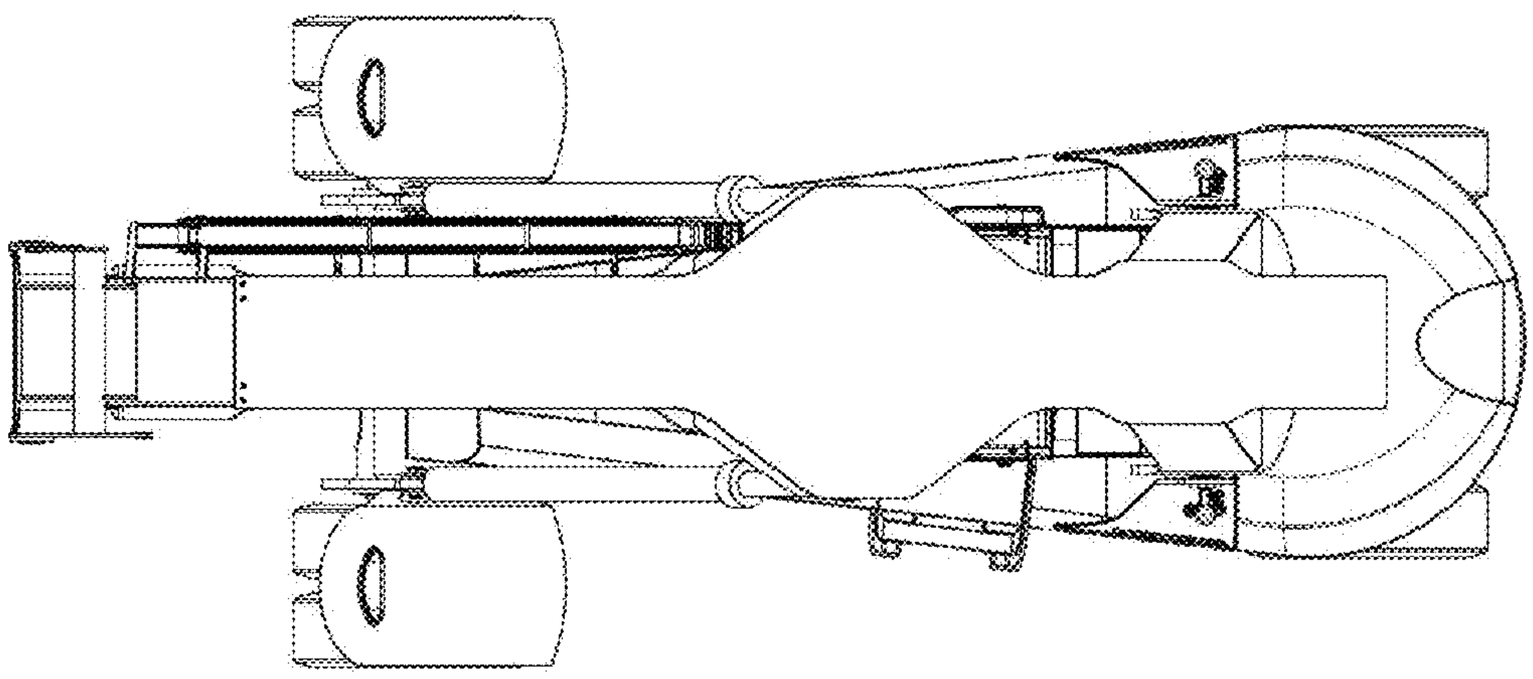

FIG. 5

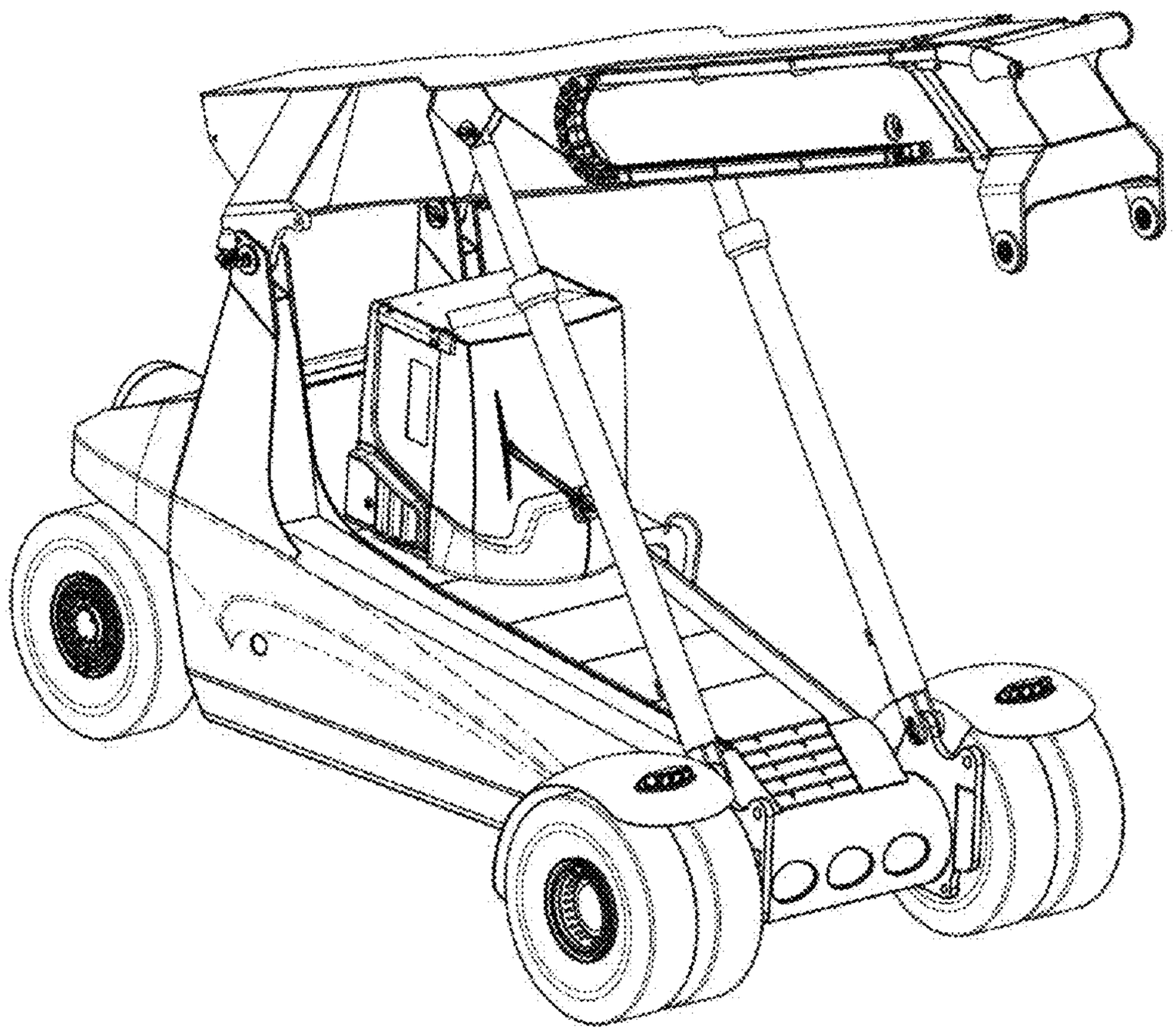

FIG. 6

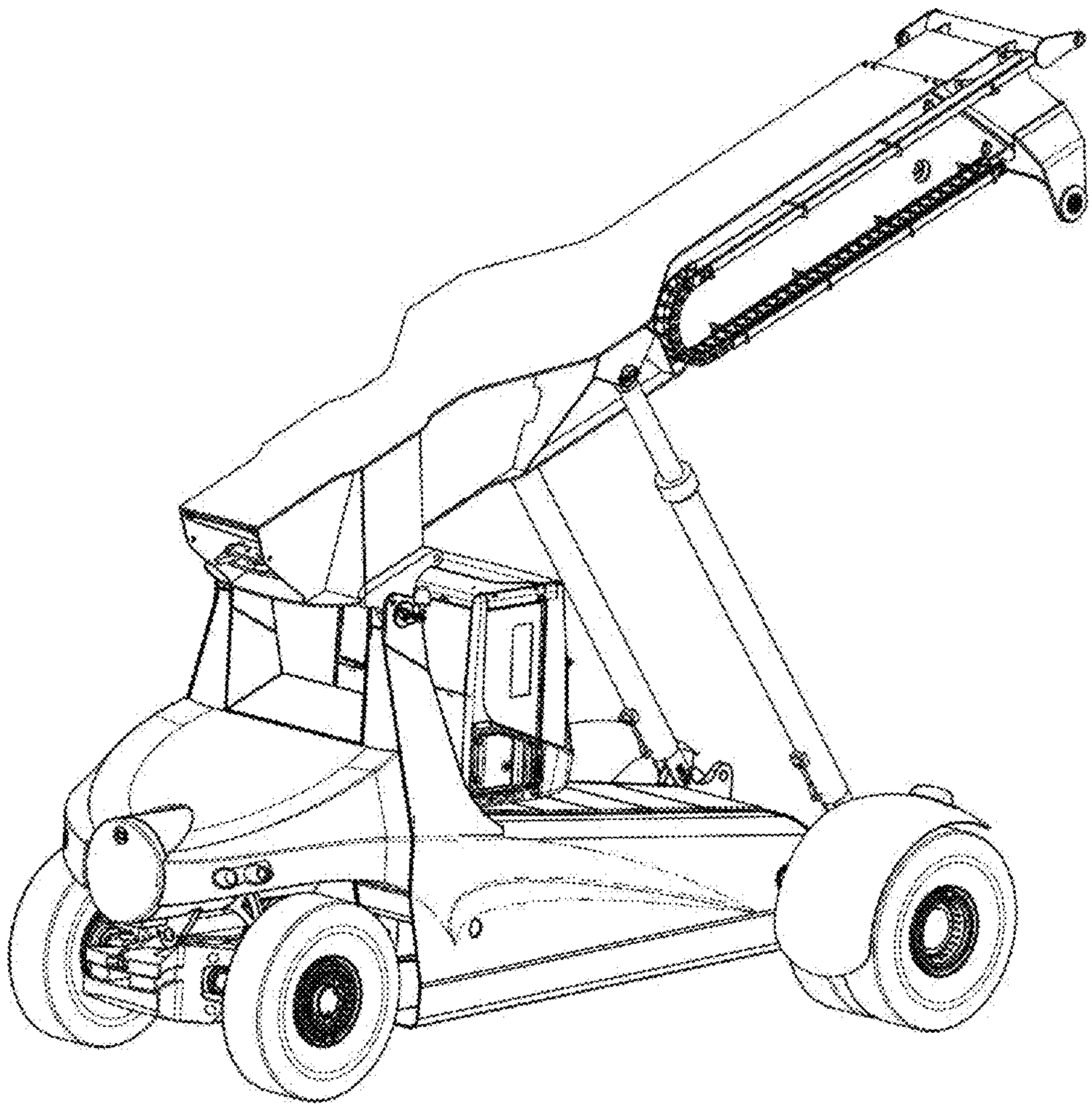

FIG. 7