US00D755901S

# (12) United States Design Patent

Chen et al.

(10) Patent No.: US D755,901 S
(45) Date of Patent: ** May 10, 2016

(54) **BUILDING BLOCK**

(71) Applicant: **T-FUN COMPANY LIMITED**, New Taipei (TW)

(72) Inventors: **Tsai-Ti Chen**, New Taipei (TW); **Hero Lee**, New Taipei (TW)

(73) Assignee: **T-FUN COMPANY LIMITED**, New Taipei (TW)

(**) Term: **15 Years**

(21) Appl. No.: **29/527,224**

(22) Filed: **May 18, 2015**

(51) **LOC (10) Cl.** ..... **21-01**

(52) **U.S. Cl.**
USPC ..... **D21/484**

(58) **Field of Classification Search**
USPC ..... D21/333, 373, 386, 389, 404, 468, 470, D21/471, 475, 484–505; 446/69, 85, 446/102–128; 434/167, 208, 259, 403; 273/153, 156, 160
CPC ..... A63H 33/04; A63H 33/06; A63H 33/062; A63H 33/08; A63H 33/086; A63H 33/088; A63H 33/10; A63H 33/101; A63H 33/108; A63H 33/12; A63F 9/12; A63F 9/1224
See application file for complete search history.

(56) **References Cited**

U.S. PATENT DOCUMENTS

| | | | | | |
|---|---|---|---|---|---|
| 2,972,833 | A * | 2/1961 | La Grutta | A63H 33/062 | 446/110 |
| 5,913,706 | A * | 6/1999 | Glickman | A63H 33/062 | 446/120 |
| D510,606 | S * | 10/2005 | Paterson | D21/484 | |
| D545,918 | S * | 7/2007 | Sorensen | D21/484 | |
| 7,553,209 | B1 * | 6/2009 | Sorensen | A63H 33/06 | 446/124 |
| 9,067,147 | B1 * | 6/2015 | Woodhouse | A63H 3/16 | |

* cited by examiner

*Primary Examiner* — Cynthia M Chin

(74) *Attorney, Agent, or Firm* — Lin & Associates Intellectual Property, Inc.

(57) **CLAIM**

The ornamental design for a building block, as shown and described.

**DESCRIPTION**

FIG. **1** is a perspective view of a building block showing my new design;
FIG. **2** is a front elevational view thereof;
FIG. **3** is a rear elevational view thereof;
FIG. **4** is a left elevational view thereof;
FIG. **5** is a right elevational view thereof;
FIG. **6** is a top view thereof;
FIG. **7** is a bottom view thereof; and,
FIG. **8** is a perspective view from another direction of the building block.

**1 Claim, 8 Drawing Sheets**

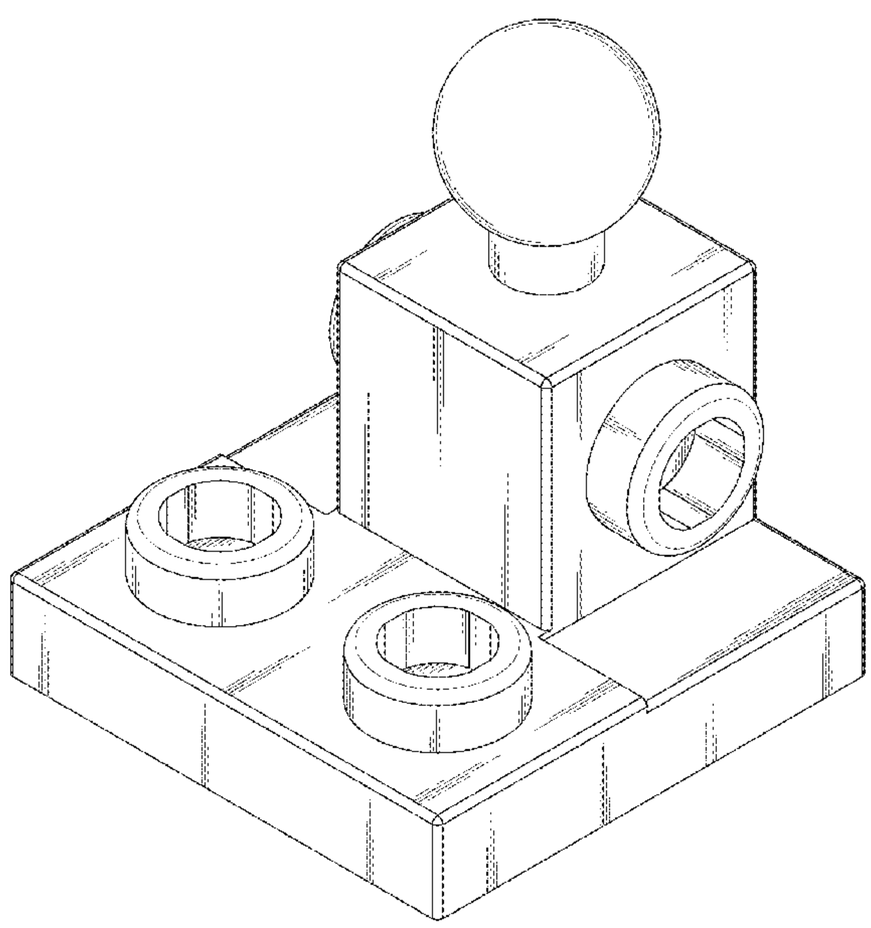

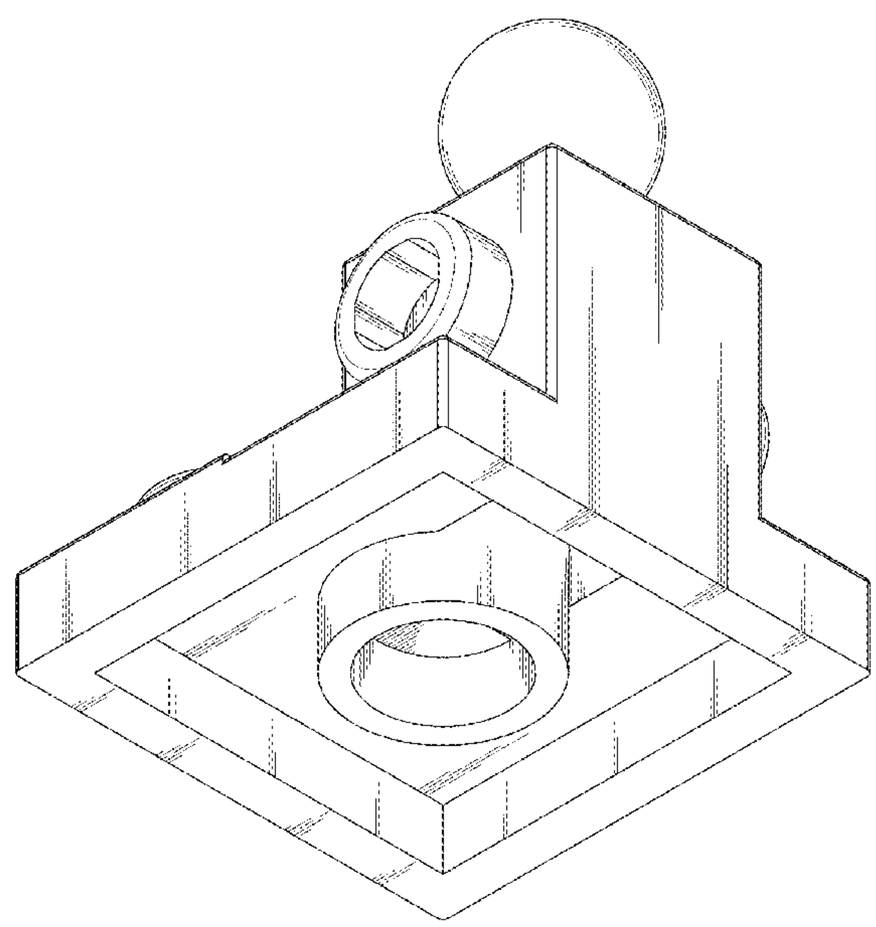

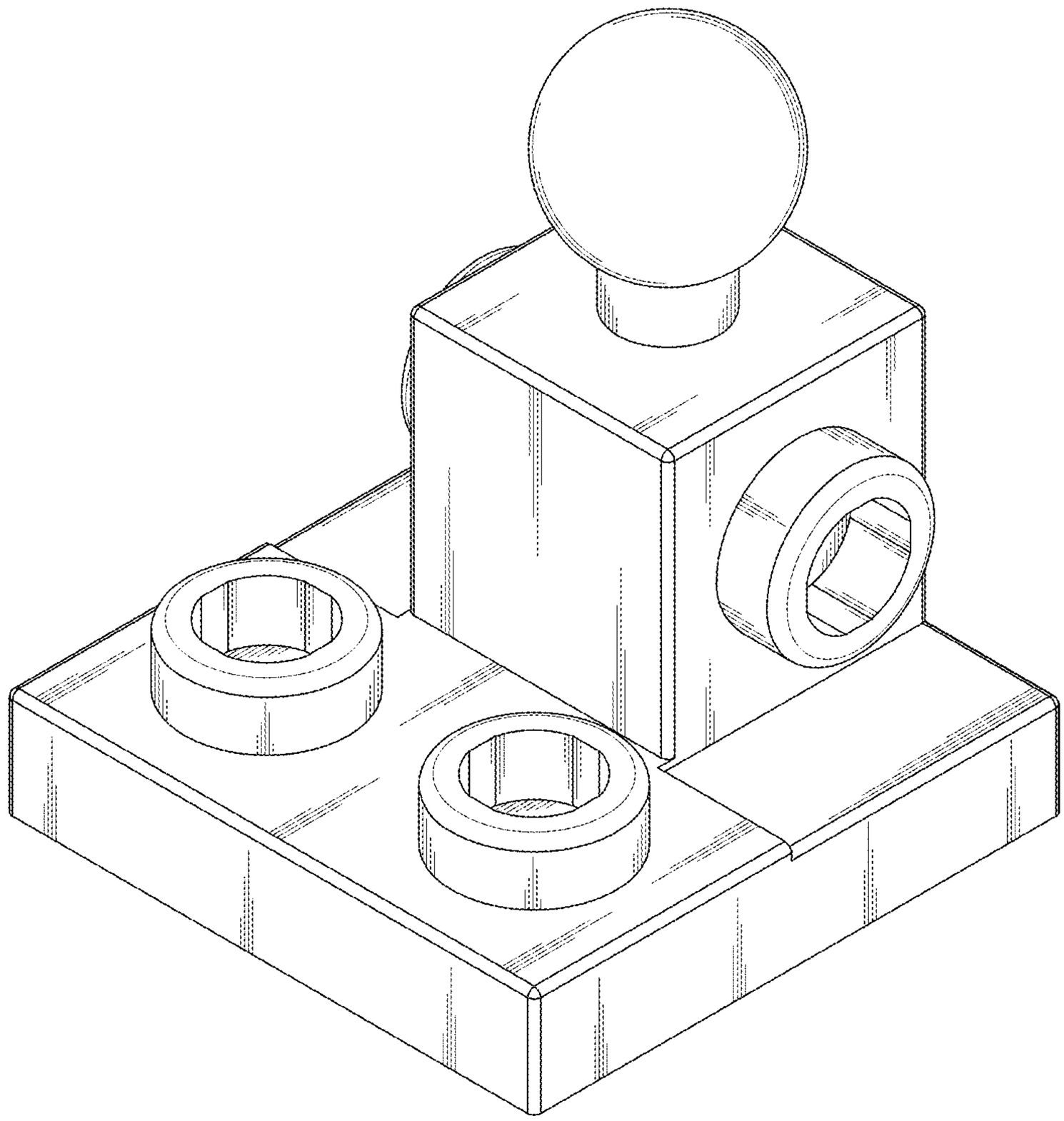

FIG. 1

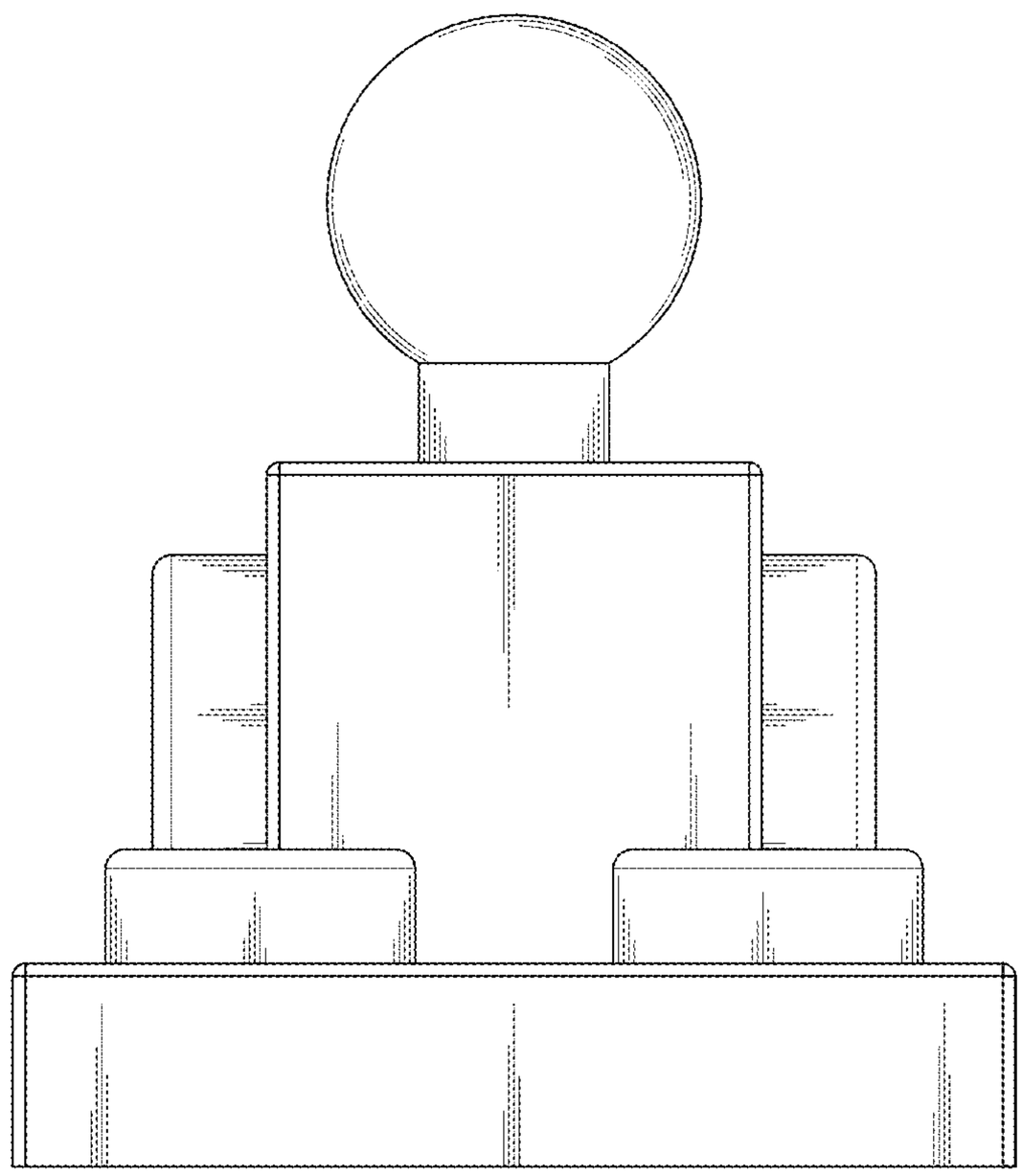

FIG. 2

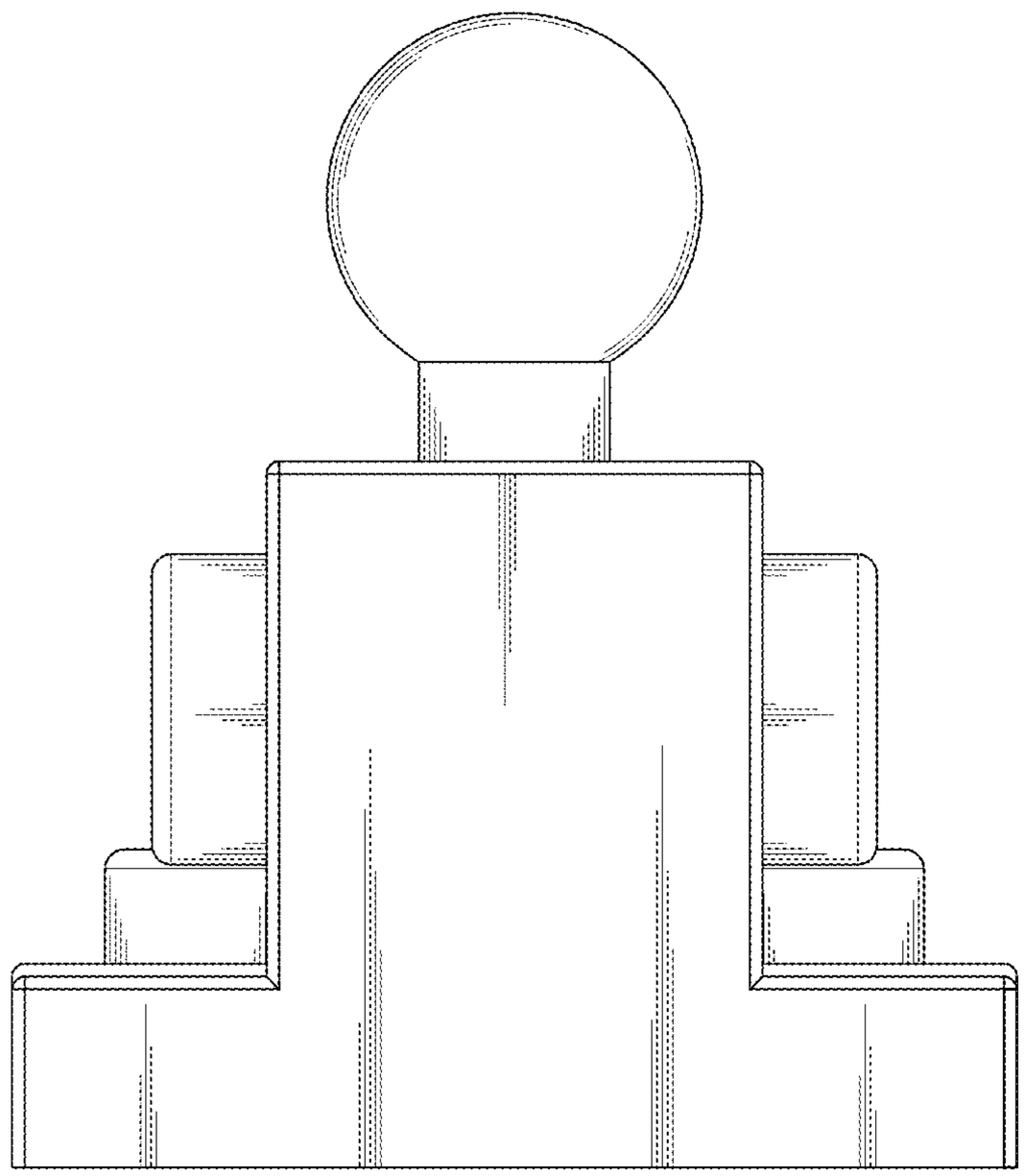

FIG. 3

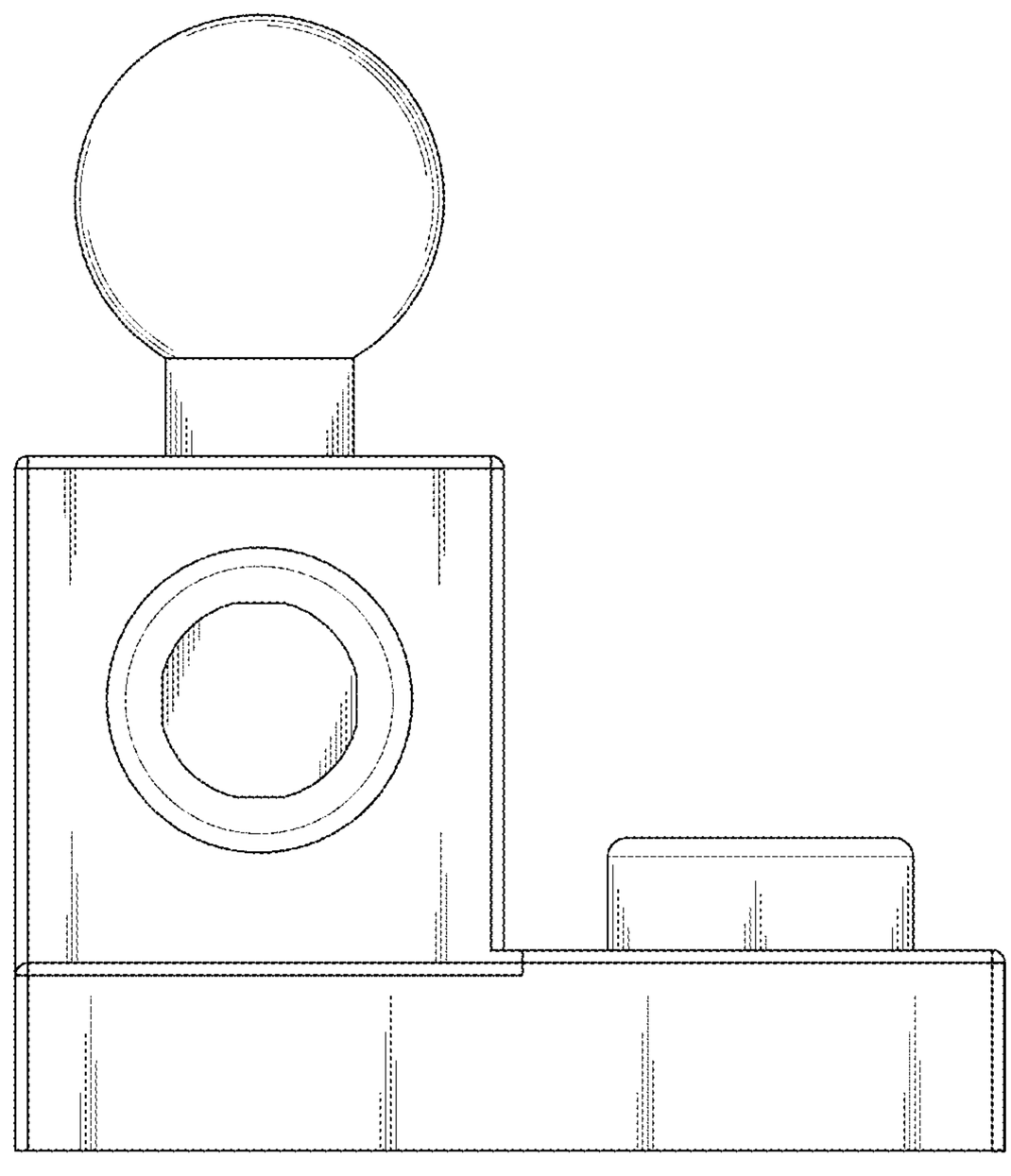

FIG. 4

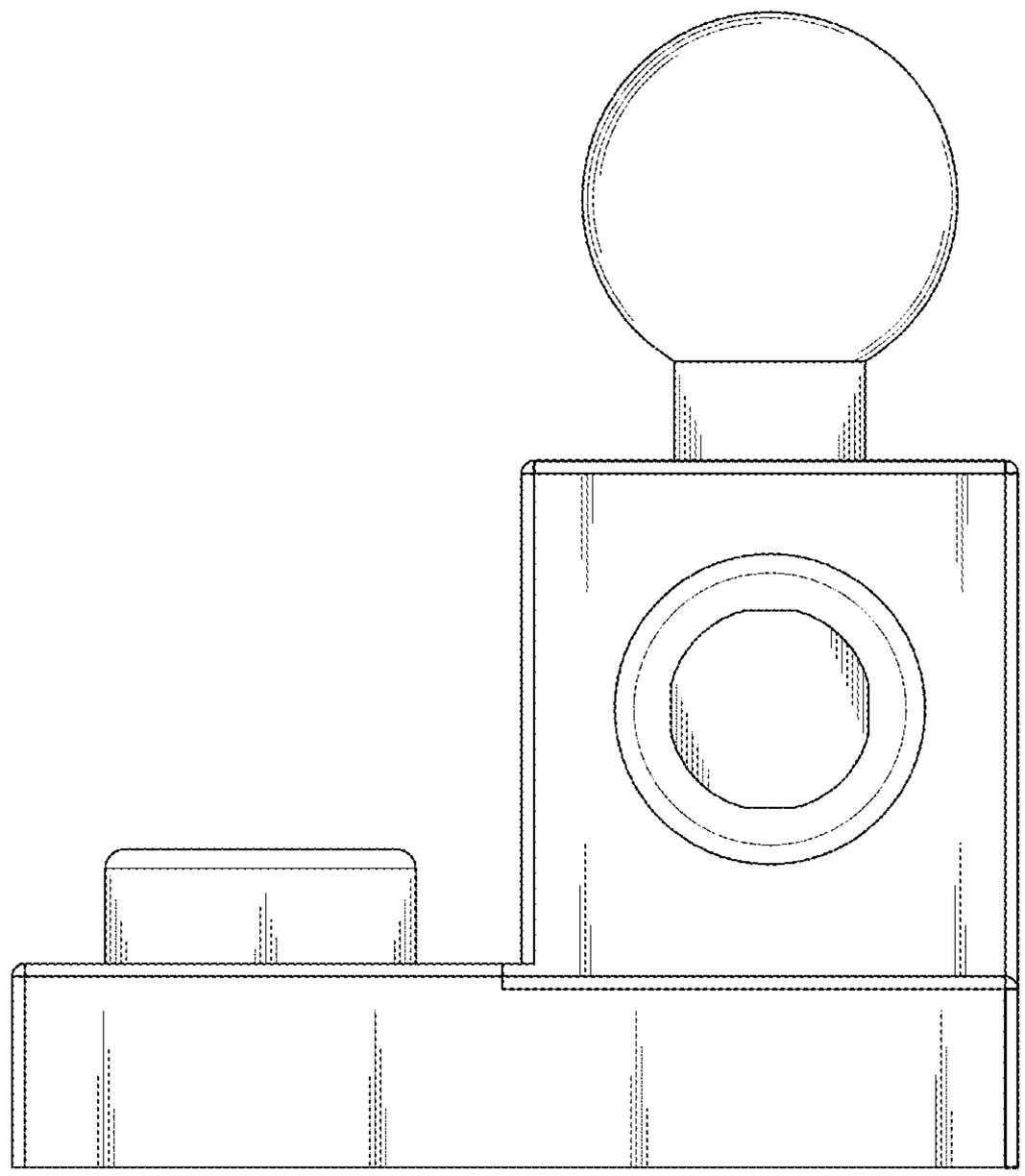

FIG. 5

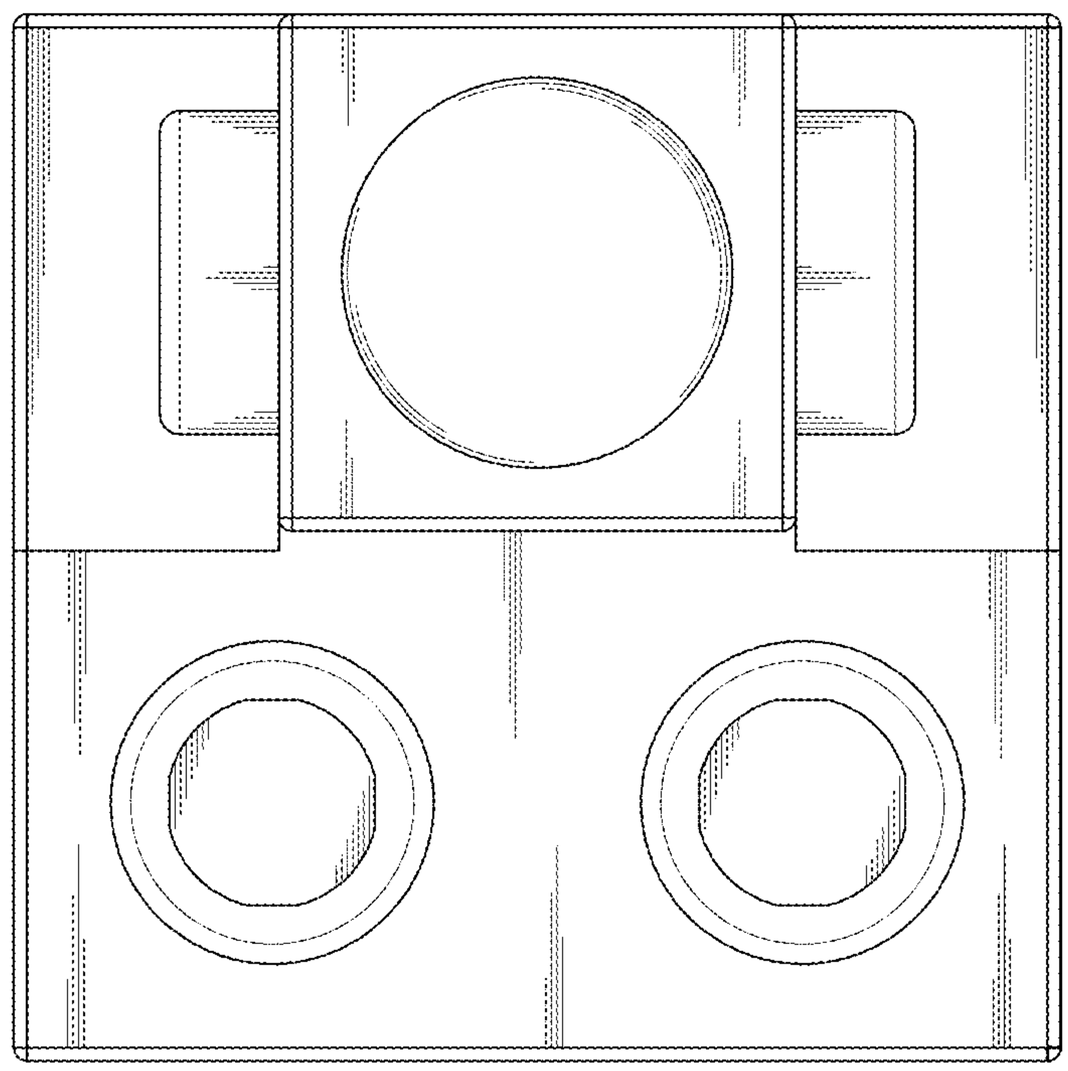

FIG. 6

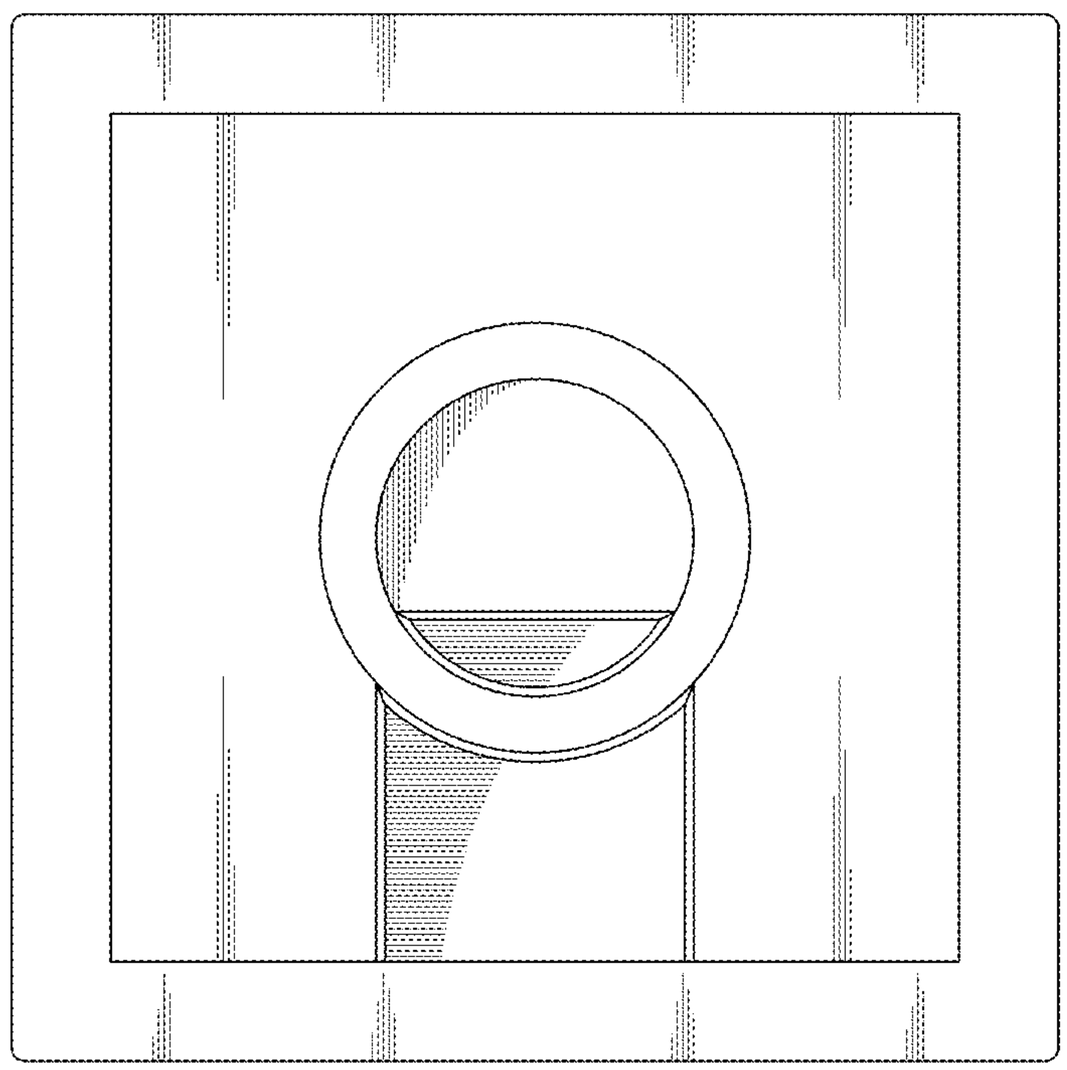

FIG. 7

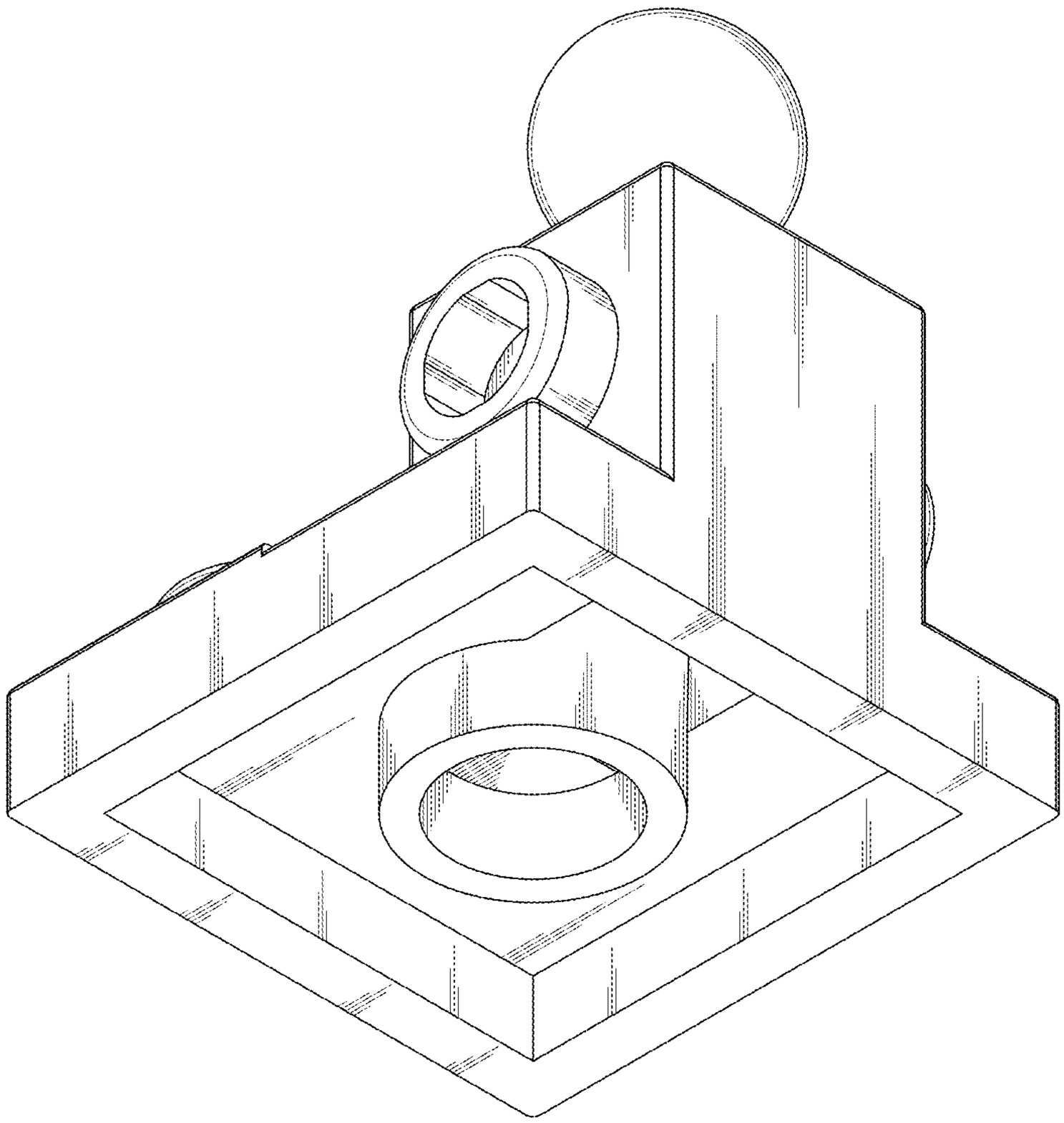

FIG. 8